US00D410620S

United States Patent [19]

Sacco et al.

[11] Patent Number: Des. 410,620

[45] Date of Patent: ** Jun. 8, 1999

[54] **PORTABLE OFFICE ASSEMBLY WITH BRIEFCASE HOLDER**

[75] Inventors: **Bruno Sacco**, Sindelfingen; **Peter Pfeiffer**, Boeblingen; **Michael Mauer**, Ettlingen; **Claudia Berger-Diebold**, Pforzheim, all of Germany

[73] Assignee: **Daimler-Benz Aktiengesellschaft**, Stuttgart, Germany

[**] Term: **14 Years**

[21] Appl. No.: **29/080,731**

[22] Filed: **Dec. 15, 1997**

[30] **Foreign Application Priority Data**

Jun. 14, 1997 [DE] Germany 97 05 493

[51] **LOC (6) Cl.** **12-16**

[52] **U.S. Cl.** **D12/415**; D12/423; D19/75

[58] **Field of Search** D12/415, 421, D12/423–426.1; D19/75, 65; D3/273, 293, 294, 905, 201; D6/432, 436, 449, 457, 458, 466, 487; 296/37.1, 37.8, 37.12–37.16

[56] **References Cited**

U.S. PATENT DOCUMENTS

D. 313,817	1/1991	Thomas	D19/75
D. 332,527	1/1993	Szablak et al.	D12/415 X
D. 345,648	4/1994	Favilla	D12/421
D. 358,124	5/1995	Landry	D12/423
D. 360,869	8/1995	Brackett	D12/423
D. 368,890	4/1996	Morris	D12/419
D. 379,084	5/1997	Hellhake et al.	D12/424
D. 390,265	2/1998	Cheris et al.	D19/75
D. 397,083	8/1998	Smith	D12/419
5,007,569	4/1991	Zarb	224/275

Primary Examiner—Doris V. Coles
Assistant Examiner—Stacia Sinuik
Attorney, Agent, or Firm—Evenson, McKeown, Edwards & Lenahan, PLLC

[57] **CLAIM**

The ornamental design for a portable office assembly with briefcase holder, as shown and described.

DESCRIPTION

FIG. **1** is a view depicting the top, front side and left side views, with briefcase holder extended of portable office assembly with briefcase holder according to our novel design;

FIG. **2** is a reduced view depicting the top, right side, and partial view of the front side with the briefcase holder extended of a portable office assembly with briefcase holder according to our novel design;

FIG. **3** is a side view from the front of a portable office assembly with briefcase holder according to our novel design;

FIG. **4** is a side view from the right with briefcase holder extended of a portable office assembly with briefcase holder according to our novel design;

FIG. **5** is a side view from the left of a portable office assembly with briefcase holder according to our nove design;

FIG. **6** is a side view from the rear of a portable office assembly with briefcase holder according to our novel design;

FIG. **7** is a view from the top with briefcase holder extended of a portable office assembly with briefcase holder according to our novel design; and,

FIG. **8** is a view from the bottom of a portable office assembly with briefcase holder according to our novel design.

The dash line showing depicts environment and is not part of the claimed design.

1 Claim, 5 Drawing Sheets

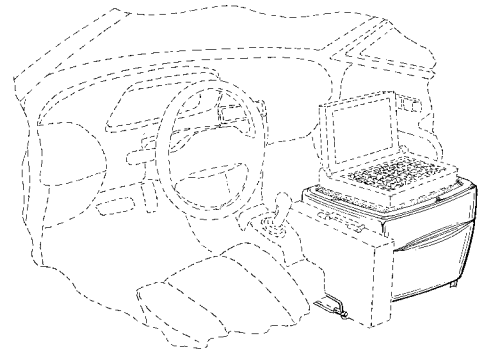

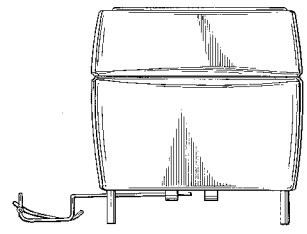

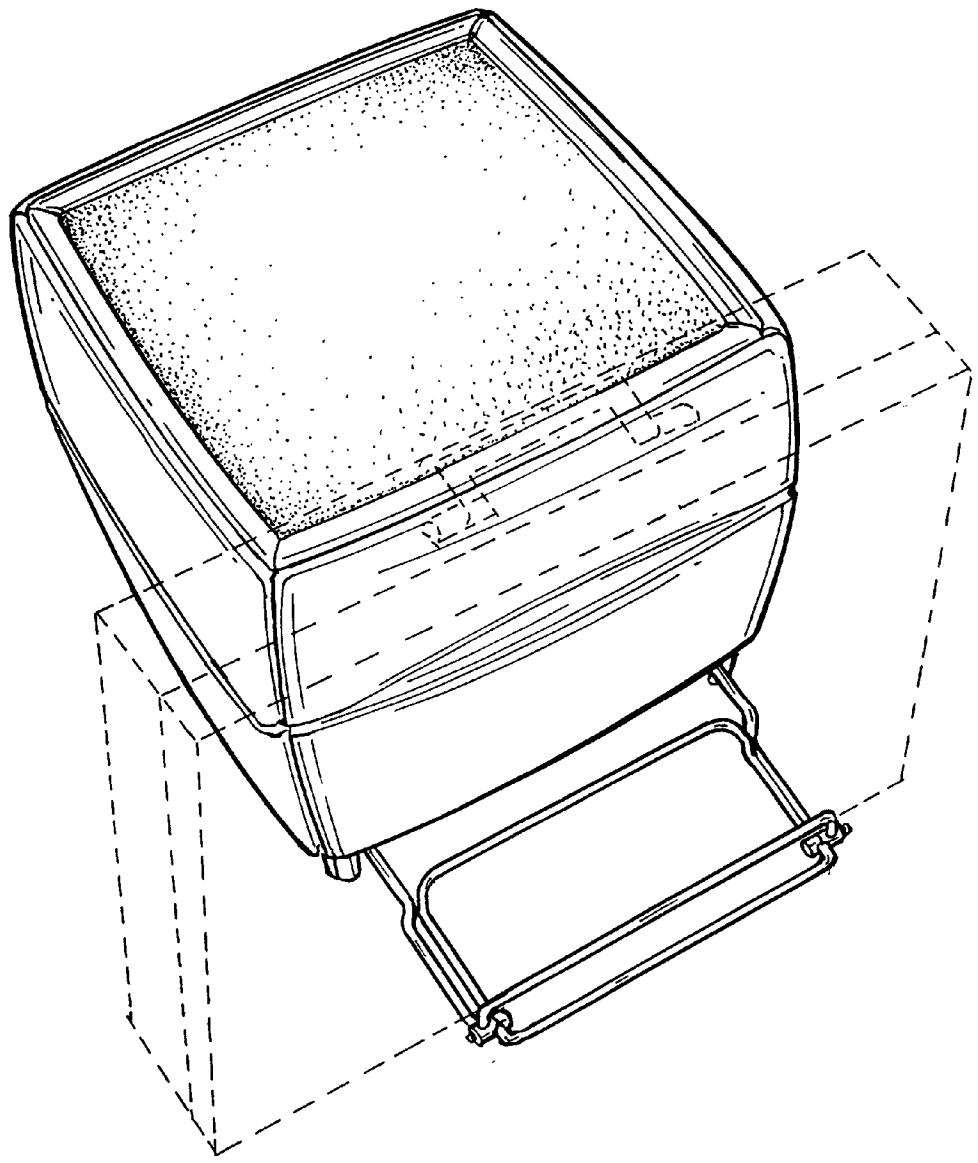

FIG.1

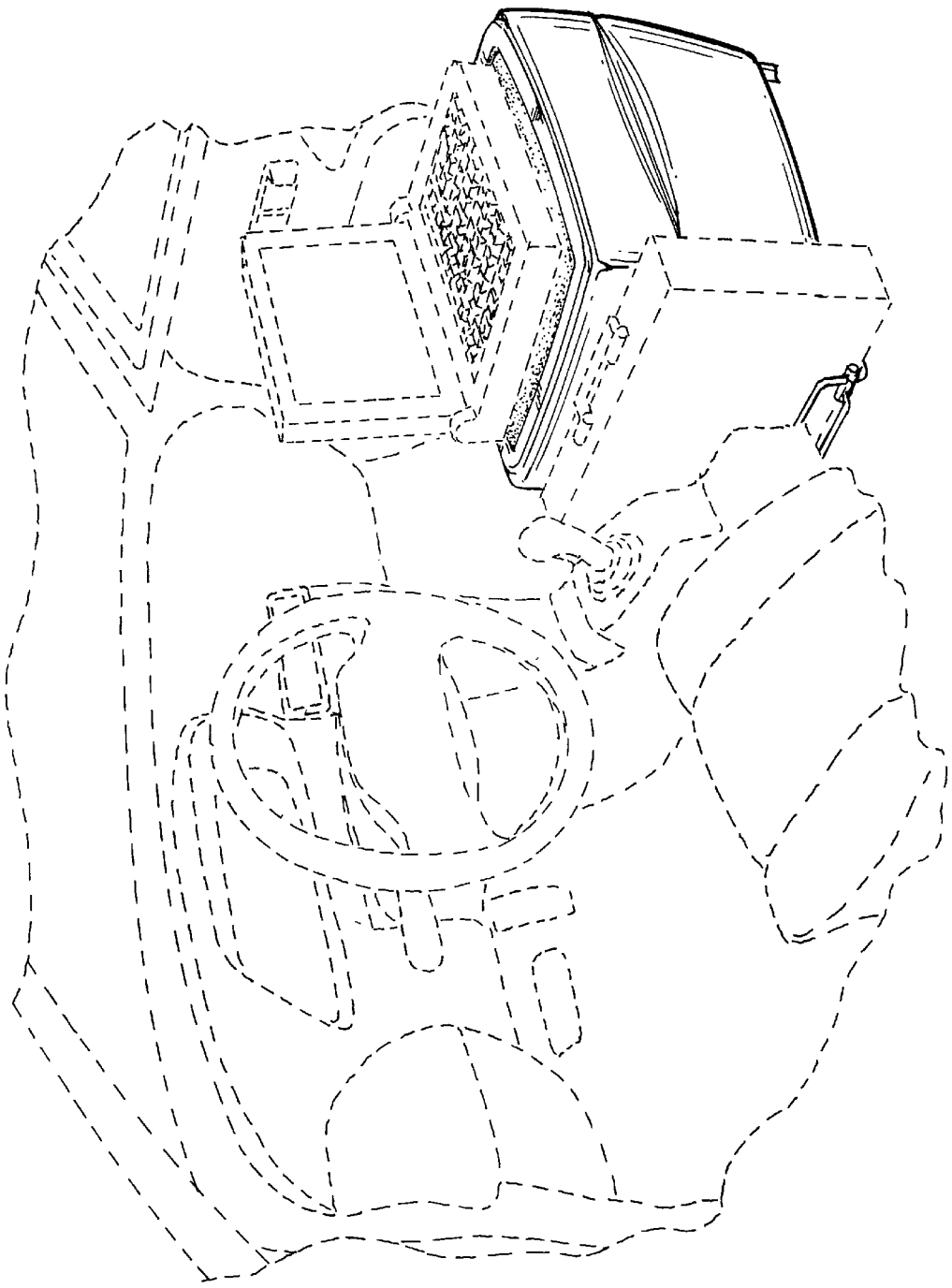

FIG. 2

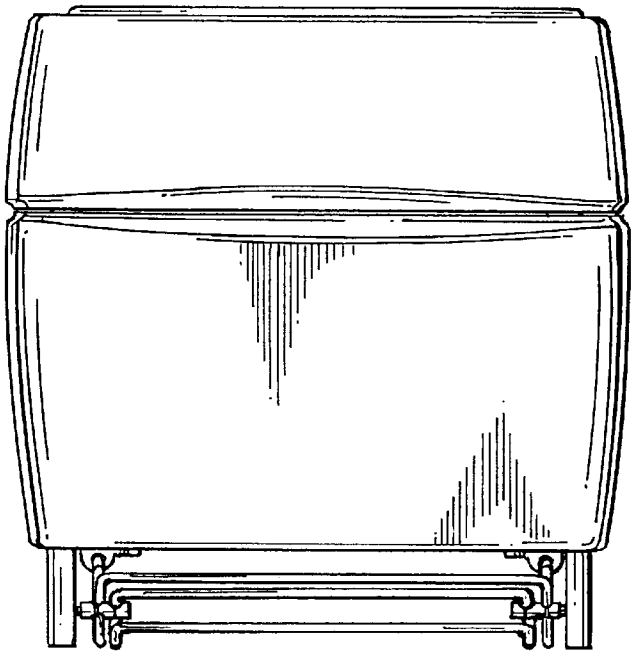

FIG. 3

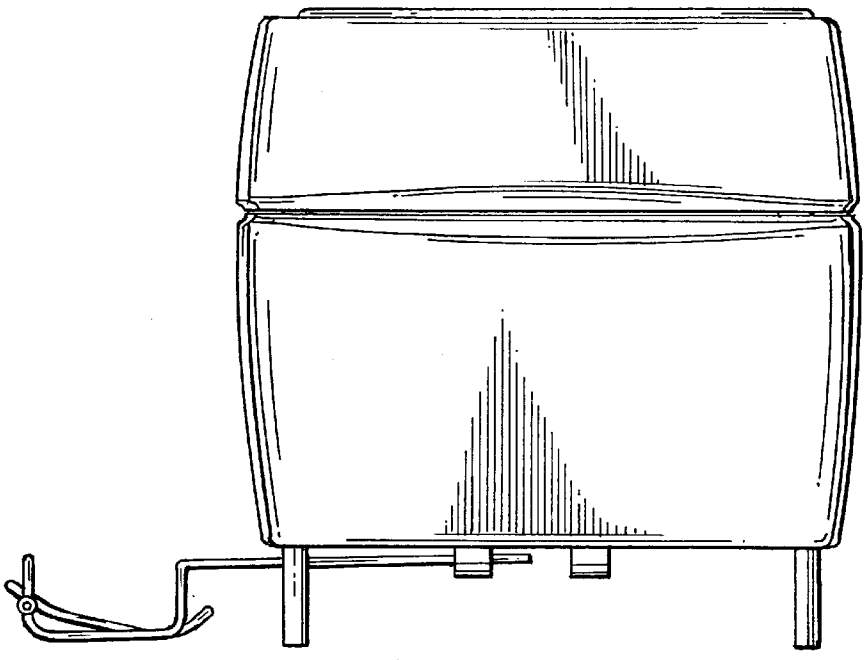

FIG. 4

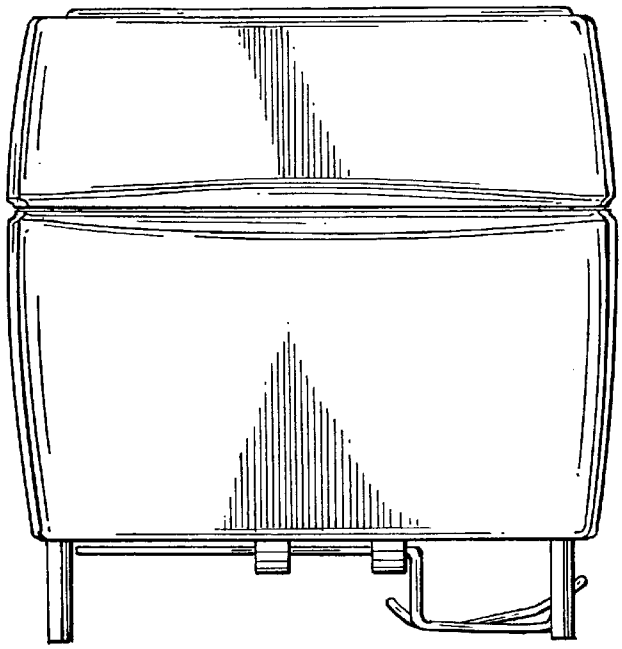

FIG. 5

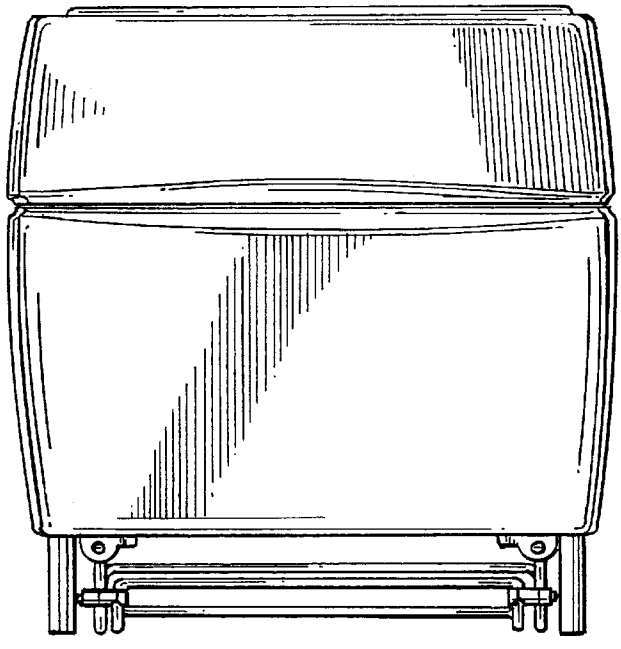

FIG. 6

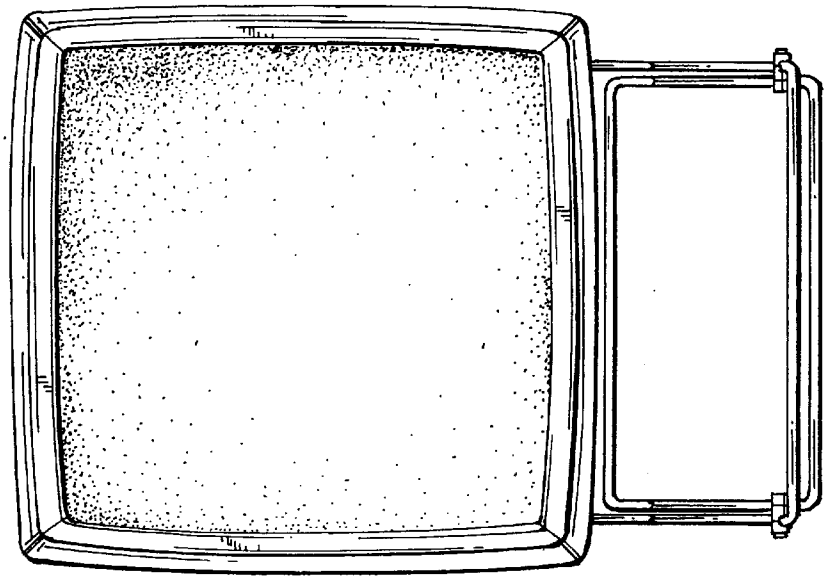

FIG. 7

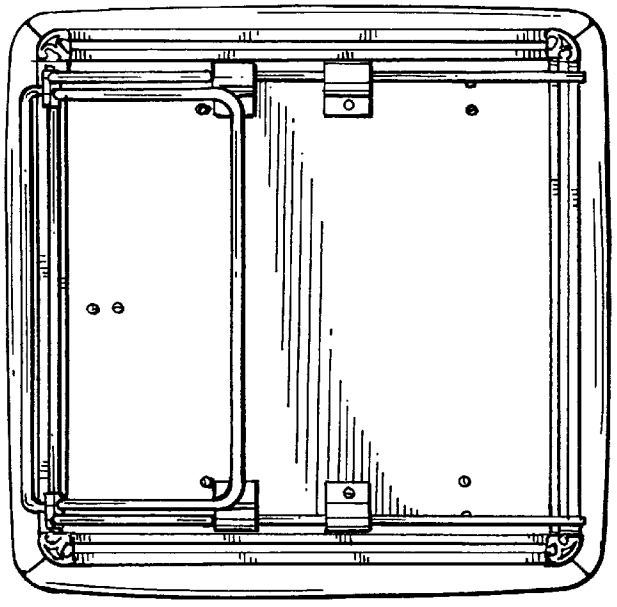

FIG. 8