May 4, 1965 J. P. VAN DER HELM 3,182,165

OVEN FOR HEATING OBJECTS BY MICROWAVES

Filed May 8, 1962

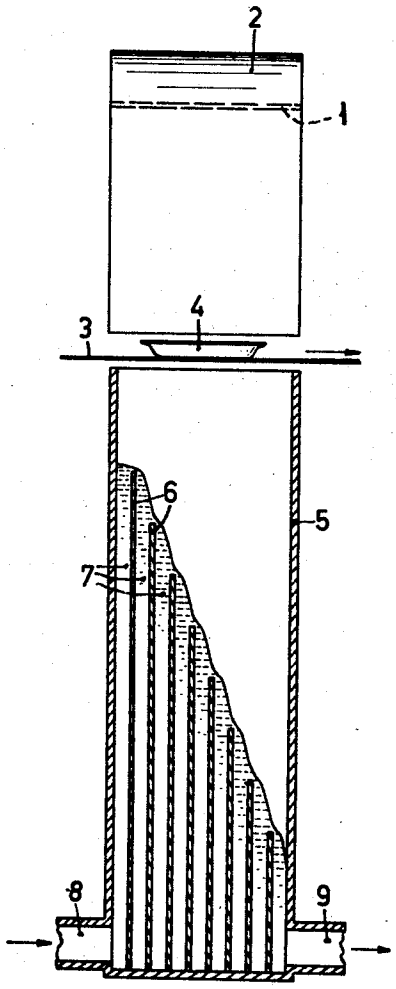

FIG.1

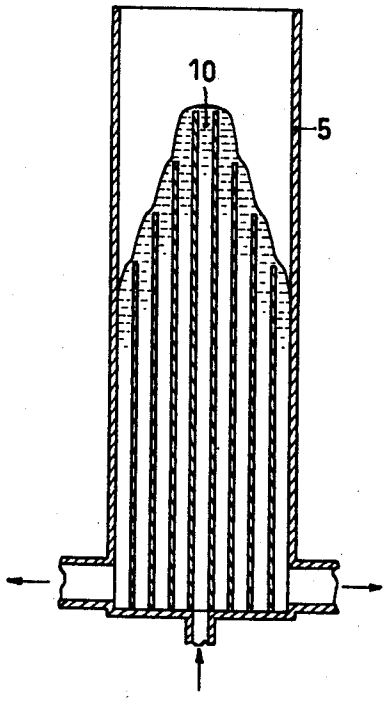

FIG.2

INVENTOR
JOHAN POSTHUMA VAN DER HELM
BY
Frank R. Trifari
AGENT

United States Patent Office 3,182,165 Patented May 4, 1965

3,182,165

OVEN FOR HEATING OBJECTS BY MICROWAVES

Johan Posthuma van der Helm, Eindhoven, Netherlands, assignor to North American Philips Company, Inc., New York, N.Y., a corporation of Delaware

Filed May 8, 1962, Ser. No. 193,138
Claims priority, application Netherlands, May 26, 1961, 265,172
12 Claims. (Cl. 219—10.55)

This invention relates to microwave heating devices and more particularly to apparatus of this type for heating objects carried on a conveyer belt along a radiator of microwave energy.

In known devices of this kind, which are frequently referred to as continuous-passage ovens and which are used inter alia for heating previously prepared foods to the desired temperature, the oven proper usually comprises a cylindrical parabolic mirror in the focal line of which a radiator of microwave energy supplied by a magnetron or other generator of micro-waves is arranged. The open side of the mirror is directed towards the conveyer belt and under the latter a container filled with high frequency energy absorbent material is placed. This material must be capable of absorbing the major part of the radiant energy if nothing lies on the conveyer belt so that it is necessary to provide means for cooling the absorbent material.

The simplest method would be to provide for circulation of a cooling liquid which itself serves as the said absorbent material. However, this involves the difficulty that in the container, which is filled wholly or in part with liquid, the liquid surface reflects the waves striking it to a considerable extent so that the energy emitted by the radiator cannot be absorbed sufficiently by the liquid.

According to the invention, an inclined liquid surface is maintained below the conveyer belt with respect to the incident radiation, so that micro-waves from the generator striking the said surface are absorbed by multiple reflections in inclined directions.

The liquid surface may exhibit a shape according to one or more wedge-shaped broken faces.

In one preferred embodiment of the invention a cooling vessel, open at the upper side, is placed below the conveyer belt and opposite the radiator. The cooling vessel has a shape such that the surface of a cooling liquid led through the vessel, which is adjacent the conveyer belt, shows a stepwise variation.

According to the invention, the cooling vessel may advantageously be shaped so that the height of each liquid step is greater than the width thereof. The cooling vessel may be divided by means of vertical partitions into compartments each having a width equal to that of one step, the member for the liquid supply being secured to that compartment which corresponds to the upper step of the liquid stairs. Preferably, the liquid steps are so narrow that micro-waves from the radiator striking the steps are dispersed due to meniscus formation on the steps.

In order that the invention may readily be carried into effect, it will now be described in detail, by way of example, with reference to the accompanying diagrammatic drawing, in which FIGURES 1 and 2 show two embodiments of the invention having different cooling vessels.

Microwave energy preferably having a wave length of from 10 to 15 cms. is emitted by a line radiator **1** positioned in the focal line of a parabolic cylindrical mirror **2** and are directed by this mirror towards a limited surface area of a moving conveyer belt **3** on which the objects to be heated, for example, dishes **4** containing foodstuffs, are passed along the radiator **1**.

The details of this arrangement are more fully disclosed in a copending United States patent application Serial No. 26,235, filed May 2, 1960 and entitled "High Frequency Heating Furnaces Operating With Very High Frequencies," now U.S. Patent 3,102,181.

A cooling vessel **5** is provided below the conveyer belt **3** having a plurality of vertical partitions **6** decreasing in height in a stepwise manner, resulting in a plurality of juxtaposed compartments **7** being formed which are open at their upper wall and decrease in height in a stepwise manner. The top of the vessel **5** may be open or may be covered with a material which is substantially transparent to high frequency electromagnetic energy. In either case, the upper surface of vessel **5** is effectively "open" to the passage of the high frequency energy. A cooling liquid, for example, water, is supplied through the highest of the compartments through an inlet pipe **8**. As soon as this compartment is filled, it flows over into the next one, and so forth, until all the compartments are wholly filled. With continued supply the water may flow away through an outlet pipe **9**. A water staircase is thus formed as it were at the upper ends of the compartments. The height of the steps of this staircase is preferably to be chosen greater than the width thereof and the latter preferably not greater than from 0.5 to 1 cm. This causes a slanting overflow in which the liquid steps acquire rounded corners due to meniscus formation. A frequent reflection in inclined directions of the incoming waves is thus enhanced.

The device shown in FIGURE 2 differs from that of FIGURE 1 only in that the highest compartment, now indicated by **10**, lies in the middle of the cooling vessel, so that the water falls down therefrom to two sides in inclined directions.

What is claimed is:

1. High frequency heating apparatus comprising a heating chamber, means for radiating high frequency electromagnetic energy within said chamber, means for absorbing said high frequency energy, means for supporting a substance to be heated between said energy radiating means and said energy absorbing means and in the path of said high frequency energy, said energy absorbing means comprising a liquid container having an open end and arranged in the path of said high frequency energy, and means for providing within said container an inclined liquid surface in the form of a plurality of steps at progressively different distances from said radiating means, said liquid surface being thereby inclined with respect to the high frequency energy incident thereon whereby a substantial portion of said high frequency energy impinging upon said liquid surface is absorbed thereby due to multiple reflections of said energy within said container.

2. High frequency heating apparatus comprising a heating chamber having walls of electrically conductive material, means for radiating microwave electromagnetic energy within said chamber to establish therein an electromagnetic field, a container having an open end facing said energy radiating means, means for supporting a material to be heated between said energy radiating means and said container, said container comprising an inlet port and an outlet port for continuously passing a cooling liquid through said container and means for causing said liquid to cascade down through said container so that the surface thereof facing said energy radiating means exhibits a stepped variation whereby the microwave energy impinging thereon is substantially absorbed.

3. High frequency heating apparatus comprising a heating chamber having walls of electrically conductive material, means for radiating microwave electromagnetic energy within said chamber to establish therein an electromagnetic field, a container having an open end facing said

energy radiating means, means for supporting a material to be heated between said energy radiating means and said container, said container comprising an inlet port and an outlet port for passing a cooling liquid through said container and means for causing said liquid to cascade down through said container so that the surface thereof facing said energy radiating means exhibits a stepped variation in which the height of each liquid step is greater than its width, whereby the microwave energy impinging thereon is substantially absorbed.

4. In a high frequency heating apparatus having energy waveguide means, means for raidating high frequency electromagnetic energy within said waveguide and means to support a material to be heated in the path of said high frequency energy, apparatus for absorbing said high frequency energy comprising a container adjacent to said waveguide means and having an open end facing said energy radiating means and located on the side of said material to be heated away from said energy radiating means, said container comprising a plurality of vertical partitions dividing said container into compartments of varying heights and an inlet port and an outlet port for passing a liquid coolant through said container, said inlet port opening into that compartment having the highest partition thereby providing an inclined liquid surface exhibiting a stepped variation whereby the energy incident thereon is substantially absorbed by multiple reflections thereof within said container.

5. Apparatus as described in claim 4 wherein the width of each of said compartments corresponds to the width of the corresponding step of said liquid surface.

6. High frequency heating apparatus comprising a heating chamber, means for radiating high frequency electromagnetic energy within said chamber, means for absorbing said high frequency energy, means for supporting a substance to be heated between said energy radiating means and said energy absorbing means and in the path of said high frequency energy, said energy absorbing means comprising a liquid container having an open end and arranged in the path of said high frequency energy, said container further comprising a plurality of vertical partitions dividing said container into compartments of progressively varying heights and an inlet port and an outlet port for passing a liquid coolant through said container, said inlet port opening into that compartment having the highest partition thereby providing an inclined liquid surface exhibiting a stepped variation, said partitions being closely spaced to one another to provide a meniscus formation on said stepped liquid surface whereby the energy incident thereon is dispersed so as to be substantially absorbed by multiple reflections thereof within said container.

7. Apparatus as described in claim 6 wherein said vertical partitions progressively decrease in height in a stepped manner from one wall of said container to the opposite wall thereof.

8. Apparatus as described in claim 6 wherein said vertical partitions progressively decrease in height from an area near the center of said container to each of the outer walls thereof.

9. High frequency heating apparatus comprising a waveguide enclosure having an open end, means for radiating high frequency electromagnetic energy within said enclosure, means for absorbing said high frequency energy, conveyor means for carrying an object to be heated past the open end of said enclosure, said energy absorbing means comprising a liquid container having an open end adjacent and facing said open end of said enclosure and in the path of said high frequency energy, said container further comprising a plurality of vertical partitions of progressively varying heights dividing said container into compartments of progressively varying heights and an inlet port and an outlet port for passing a liquid coolant through said container, said inlet port opening into that compartment having the highest partition thereby providing an inclined liquid surface exhibiting a stepped variation whereby the energy incident thereon is substantially absorbed by multiple reflections thereof within said container.

10. Apparatus as described in claim 9 in which the difference in height between adjacent partitions is greater than the spacing between said partitions.

11. Apparatus as described in claim 10 wherein the spacing between partitions is of the order of one half to one centimeter.

12. High frequency heating apparatus comprising a waveguide enclosure, means for supplying high frequency electromagnetic energy having a given direction of propagation to said enclosure, energy absorbing means arranged in the path of said high frequency energy, means for supporting a substance to be heated between said energy supply means and said energy absorbing means and in the path of said high frequency energy, said energy absorbent means comprising a liquid container holding a dielectric liquid therein, exposed to the incident energy, and means for providing an inclined liquid surface within said container facing and inclined with respect to said direction of propagation of the incident high frequency energy so that a substantial portion of said incident energy is absorbed by said liquid due to dielectric heating thereof by means of multiple reflections of said energy within said container produced by said inclined liquid surface.

References Cited by the Examiner

UNITED STATES PATENTS

2,627,571	2/53	Hiehle et al.	219—10.55
2,894,219	7/59	Frederico	333—22
2,958,830	11/60	Bird et al.	219—10.55

FOREIGN PATENTS

1,255,297	1/61	France.

RICHARD M. WOOD, *Primary Examiner.*