May 17, 1927. 1,629,168

H. R. MASSINGHAM

METHOD OF AND APPARATUS FOR SERVING MATERIAL UPON A CORE

Filed Jan. 12, 1926

Fig. 1.

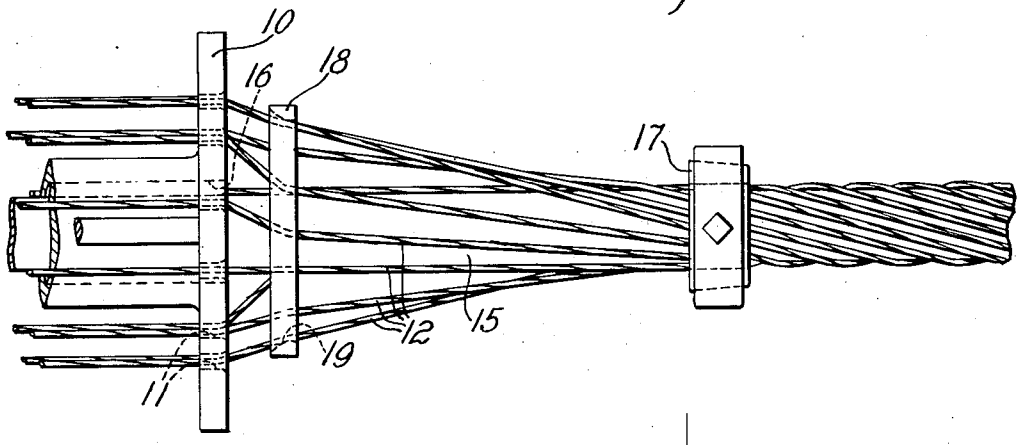

Fig. 2.

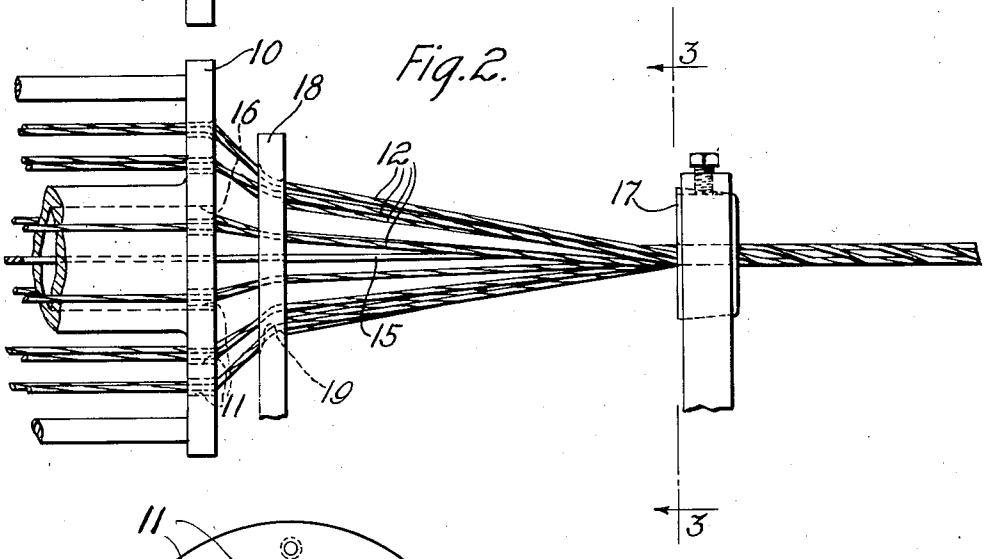

Fig. 3.

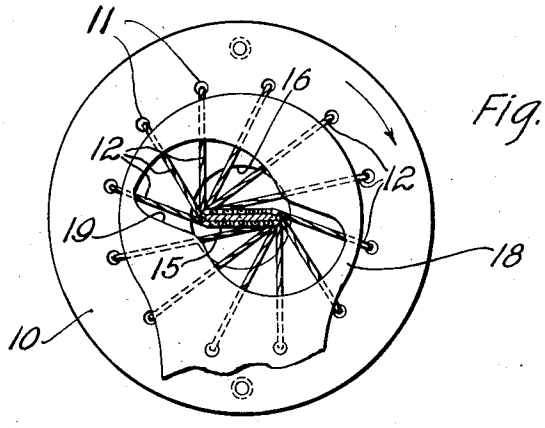

Inventor
Henry R. Massingham
by H. R. Mattison
Att'y.

Patented May 17, 1927. 1,629,168

UNITED STATES PATENT OFFICE.

HENRY ROGERS MASSINGHAM, OF LA GRANGE, ILLINOIS, ASSIGNOR TO WESTERN ELECTRIC COMPANY, INCORPORATED, OF NEW YORK, N. Y., A CORPORATION OF NEW YORK.

METHOD OF AND APPARATUS FOR SERVING MATERIAL UPON A CORE.

Application filed January 12, 1926. Serial No. 80,755.

This invention relates to a method of and apparatus for serving material upon a core, and more particularly to a method of and apparatus for controlling the tension in strands during the serving thereof to a non-circular shaped core.

It is the practice in connection with the manufacture of certain types of electrical cables, principally those employed for interconnecting sections of telephone exchange switchboards, to form the cable on a non-circular core or pressboard. Any appreciable change in the tension of the material served on the core, due to the particular shape of the core and the point of application of the material thereto with respect to the position of the material supply spools, may result in non-uniform distribution of the material and also may considerably distort the core. It is, therefore, the object of the present invention to provide a method of and apparatus for distributing and maintaining substantially constant the tension of material served in non-circular cores to produce a product which is of a substantially uniform cross-section over its entire length.

In order to attain this object in accordance with one embodiment of this invention, as practiced in connection with the forming of a flat type telephone switchboard cable wherein the core comprises a thin flat strip of pressboard, a plurality of strands or wires are withdrawn from a plurality of supply spools distributed uniformly around the longitudinal axis of the core. During the travel of the strands or wires from the point of distribution to the point of application to the core, the strands or wires are progressively deflected to take up the slack therein as they are formed around the edges of the core and subsequently released as they are laid upon the flat longitudinal sides thereof.

Specifically, the invention provides a stationary plate having a suitably shaped aperture inside of which a plurality of strands, such as a pair of wires, are withdrawn after passing through a distributor ring rotating with a twisting or stranding drum of the usual type, the contour of the aperture being such that the length of each pair of wires between the distributor and its point of application to the core will be maintained the same, irrespective of its point of application thereto, and consequently the rate at which the wires are withdrawn from their supply spools will be the same thereby maintaining a substantially uniform tension in the wires at all times.

Other objects and advantages of this invention will more fully appear from the following detailed description taken in connection with the accompanying drawing which illustrates one embodiment thereof, and in which

Fig. 1 is a fragmentary plan view of the outlet end of a wire twisting or stranding machine embodying the features of this invention;

Fig. 2 is a side elevation thereof; and

Fig. 3 is a vertical sectional view on the line 3—3 of Fig. 2, looking in the direction of the arrows.

It is believed that a better understanding of the improved method will be procured from a description of the improved apparatus, whereby the method may be practiced.

This invention will be described in connection with a wire twisting or stranding machine, such as is used in the manufacture of telephone cables. In order to simplify the disclosure of the invention only such elements of a stranding or serving machine have been shown, as are necessary to a full and complete understanding of the invention. For a more complete illustration and description of a stranding or serving machine with which apparatus of the present invention is particularly applicable, reference may be had to the co-pending application of C. R. Avery, Serial No. 709,332, filed April 28, 1924.

Referring now to the drawing in detail, the numeral 10 indicates the usual rotary distributor or guide ring provided in the present instance with twelve eyes or apertures 11 through each of which is threaded a pair of individually insulated twisted wires, each twisted pair of wires being indicated by the numeral 12. In the operation of the machine each pair of the wires 12 is drawn from a freely rotatable supply spool (not shown) carried upon a rotatable stranding drum (not shown). A telephone switchboard cable of the flat type is illustrated in the drawing as being formed, the pairs of wires 12 being stranded or twisted about a thin flat pressboard core 15, which in the

operation of the stranding machine is advanced toward the right as viewed in Figs. 1 and 2 at a predetermined rate, the core 15 passing along the axis of the machine and then through an aperture 16 formed in the distributor 10. A polisher is indicated at 17 which is provided with an aperture having a contour corresponding to the shape of the finished cable, which may be drawn therethrough by a usual capstan mechanism (not shown).

Positioned intermediate the polisher 17 and the distributor 10 and adjacent the latter is a tension control device 18 embodying the features of this invention. The device 18 is in the form of a plate supported upon a stationary part of the machine and is provided with a cam-shaped aperture 19 through which the core 15 and pairs of wires 12 pass, the shape of the aperture 19 depending upon the particular shape of the core 15 to be served, as will be more fully described hereinafter.

It will readily be apparent that during the serving operation as the distributor 10 revolves in the direction indicated by the arrow (Fig. 3) about the longitudinally moving thin flat core 15, the wires 12 will be laid spirally therealong in evenly spaced relation as clearly shown at the right hand of Fig. 1. Let it be assumed that the device 18 is not positioned between the distributor 10 and polisher 17 but has been omitted, in which case it will be apparent as any particular pair of wires 12 is wrapped around either narrow edge of the core 15 in leaving either the upper or lower surface of the core that the rate of speed at which the pair of wires is withdrawn from its supply spool will be suddenly increased as it is laid across either the upper or lower surface of the core, and upon being wrapped around the core at either end thereof the rate of withdrawal will be suddenly decreased. Due to the intermittent, irregular or jerky speed at which the wires are being withdrawn from their supply spools, extreme care must be taken in the stranding of flat, elliptical or other non-circular shaped cable, in that, due to the inertia of the supply spools, it may cause a breakage in the wires or the cutting of the core 15 at the edges thereof particularly in the case of the stranding of finer sizes of wire.

As hereinbefore referred to, the contour of the cam-shaped aperture 19 in the plate 18 is dependent upon the shape of the core to be served, and is so shaped that the length of each of the pairs of wires 12 in its passage between the guide apertures 11 in the distributor 10 and their point of application to the core, which is at the left hand side of the polisher 17, will be maintained the same irrespective of its point of application to the core 15. This is accomplished as is clearly illustrated in Fig. 3 of the drawing due to the deflection of the wires as they move toward the edges of the core 15, thus taking up the slack which might otherwise occur as the wires are wrapped around either narrow edge.

Thus the length of each pair of wires 12 between the distributor and its point of application to the core irrespective of its point of application thereto is maintained substantially the same, and consequently the rate at which they are withdrawn from their respective supply spools will be the same, thus maintaining a substantially uniform tension in the wires at all times.

What is claimed is:

1. The method of serving a plurality of strands to a non-circular shaped core, which consists in distributing the strands from a plurality of points around the core, maintaining the length of each individual strand between its point of distribution and its point of application to the core the same irrespective of its point of application to the core and wrapping it therearound.

2. The method of serving a plurality of strands to a non-circular shaped core, which consists in distributing the strands from a plurality of uniformly spaced points around the axis of the core, progressively deflecting each strand between its point of distribution and its point of application to the core so as to maintain the length of the strand the same irrespective of its point of application to the core and wrapping it therearound.

3. The method of serving a plurality of strands to a non-circular shaped core, which consists in distributing the strands from a plurality of points around the core, maintaining the length of each individual strand between its point of distribution and its point of application to the core the same irrespective of its point of application to the core, and causing a combined relative rotation between the points and the core and a relative movement therebetween along the axis of the core to wrap the strands upon the core.

4. In a serving apparatus, means for wrapping a strand around a longitudinally moving non-circular core, and stationary means continuously engaging and progressively deflecting the strand to maintain the length constant during the wrapping thereof.

5. In a serving apparatus, means for distributing a plurality of strands from a plurality of points around a non-circular core and wrapping them therearound, and means designed to maintain the length of each individual strand between its point of distribution and its point of application to the core the same irrespective of its point of application thereto.

6. In a serving apparatus, means for distributing a plurality of strands from a plu-

rality of points uniformly spaced around the axis of a non-circular core and wrapping them therearound, and stationary means designed to maintain the length of each individual strand between its point of distribution and its point of application to the core the same irrespective of its point of application thereto.

7. In a serving apparatus, means for distributing a plurality of strands from a plurality of points distributed around a non-circular core and wrapping them therearound, and means having a continuously changing cam-like surface designed to progressively deflect each strand between its point of distribution and its point of application to the core so as to maintain the length of each individual strand the same irrespective of its point of application thereto.

8. In a serving apparatus, means for distributing a plurality of strands from a plurality of points uniformly spaced from each other and around the axis of a non-circular core and wrapping them therearound, and stationary means provided with an aperture, the contour of which is dependent upon the shape of the core and designed to progressively deflect each strand between its point of distribution and its point of application to the core, so as to maintain the length of each individual strand the same irrespective of its point of application thereto.

9. In a serving apparatus, means for distributing a plurality of strands from a plurality of points distributed around a non-circular core, means designed to maintain the length of each individual strand between its point of distribution and its point of application to the core the same irrespective of its point of application thereto, and means for causing a combined relative rotation between the distributing points and the core and a relative movement therebetween along the axis of the core to wrap the strands upon the core.

In witness whereof, I hereunto subscribe my name this 22nd day of December, A. D., 1925.

HENRY ROGERS MASSINGHAM.