Feb. 10, 1925.

1,525,572

R. M. DODD

BABY TRAVEL BED

Filed March 15, 1923

Fig. 1.

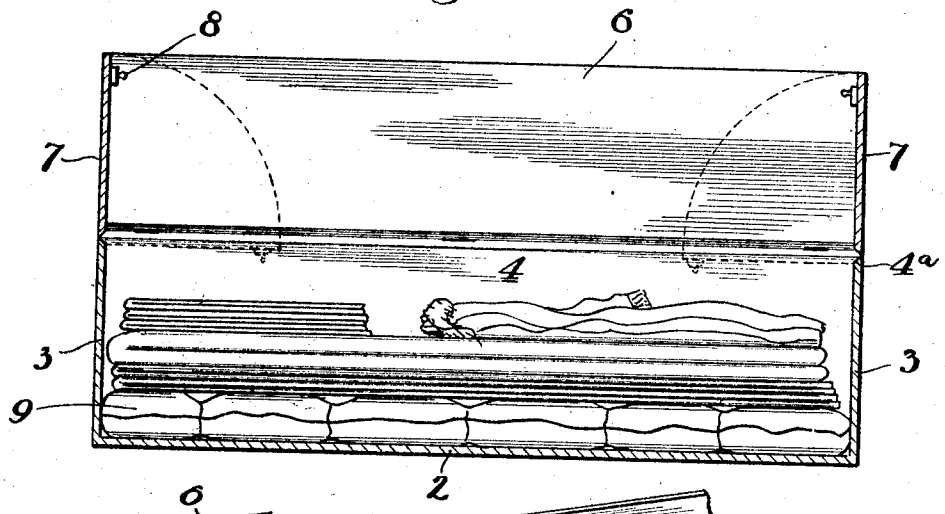

Fig. 4.

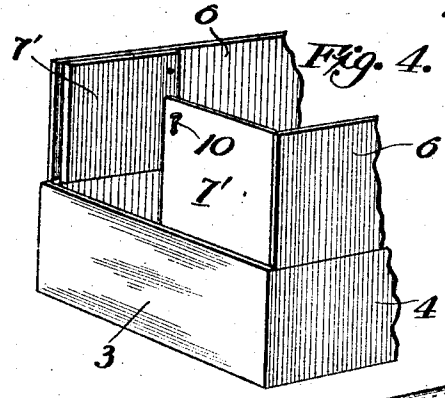

Fig. 3.

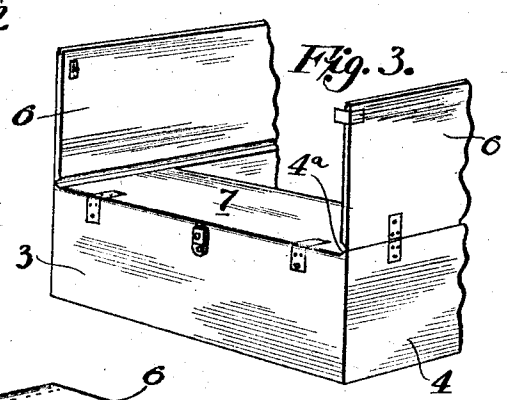

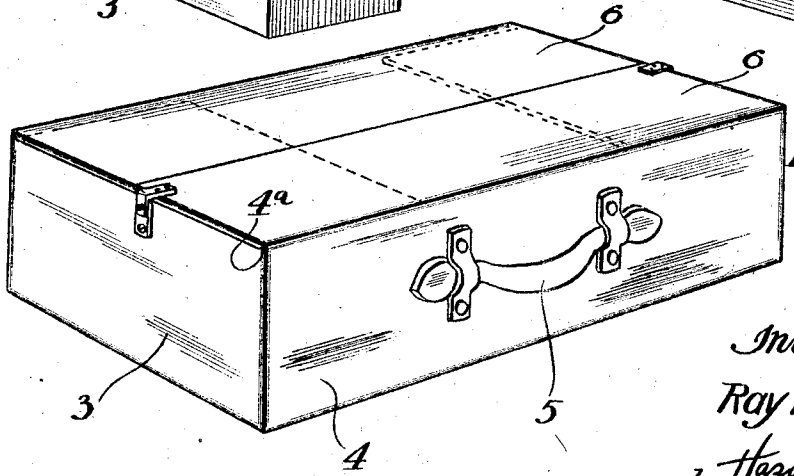

Fig. 2.

Inventor
Ray M. Dodd
by Hazard & Miller
Attys

Patented Feb. 10, 1925. 1,525,572

UNITED STATES PATENT OFFICE.

RAY M. DODD, OF BURBANK, CALIFORNIA.

BABY TRAVEL BED.

Application filed March 15, 1923. Serial No. 625,230.

To all whom it may concern:

Be it known that I, RAY M. DODD, a citizen of the United States, residing at Burbank, in the county of Los Angeles and State of California, have invented new and useful Improvements in Baby Travel Beds, of which the following is a specification.

This invention relates to travelers' utensils, and more particularly has for its object to provide a baby travel bed which consists of a portable hand case adapted to be readily converted into a baby bed.

Another object is to provide a traveler's case approximating in form a dress suitcase and which has one side wall or main panel divided into longitudinal leaves which are connected to longitudinal members so that the leaves may be erected as continuation of the longitudinal edge walls and thus provide a spacious bed chamber within the opened case with comparatively deep walls.

Other objects and advantages will be made manifest in the following specification of an embodiment of the invention illustrated in the accompanying drawings, wherein—

Figure 1 is a longitudinal vertical section showing the bed in set up position.

Fig. 2 is a perspective of the closed bed and case.

Fig. 3 is a perspective of a portion of the case partly opened.

Fig. 4 is a perspective of a portion of a modified form of the case.

The bed of the present invention consists of a box or case having a bottom panel 2, end panels 3 and longitudinal side walls 4, which may conveniently be of the proportions of a standard size suitcase, for the carrying of which one of the longitudinal walls is provided with a handle 5.

A panel parallel to the bottom 2 is preferably formed of two longitudinal leaves 6 flexibly connected by any suitable form of hinge to the contiguous top edges of the longitudinal walls 4, the leaves 6, therefore, being adapted to close inwardly and thus form a closure for the top of the box. The leaves are preferably of equal width or heighth and when opened, as shown in Figures 1 and 2, form vertical extensions of the side walls 4. The leaves 6 are adapted to be temporarily suspended in opened position by end wings 7 which, in Figure 3, are shown as foldably connected to the end walls 3 of the case or box, and are adapted to be returned to vertical position, as shown in Figure 1, and latched as by latches 8 or otherwise suitably attached to the upright leaves 6. As will be observed from Figure 1, the erected leaves and wings form lengthened walls and provide a comparatively deep baby receiving chamber inside of the box, which may be provided with a mattress or other cushion forming medium 9, and within the box may be arranged bed clothing and baby clothes.

A slightly modified form of the end wings is illustrated at 7′ in Figure 4, wherein the end wings are foldably connected to the contiguous end edges of the side leaves 6, the end of each leaf 6 being provided with a winged section 7′. When the leaves 6 are set up the wing sections 7′ are adapted to be unfolded from the leaves to a position over the end walls 3 and may then be fastened as by hooks 10.

Obviously, the foldable wing and leaf members may be provided with any suitable form of hinge. In Figures 2 and 3 the side walls 4 are shown as having downwardly and inwardly beveled shoulders 4^a and the contiguous edges of the leaves 6 are correspondingly beveled so as to form a mitered joint; the end walls 3 being of slightly less width than the longitudinal walls 4 so as to receive the thickness of the leaf 6 and thus form a flush top closure of the leaves 6 which, in their closed position, rest on the top edges of the end walls 3.

From the above it will be seen that I have provided a baby travel bed which can be collapsed into a simple and compact case-like form to be conveniently carried, and yet which may be adjusted in set up position by the unfolding of the leaves and wings and through proper attachment, and form a deep and comfortable and practicable baby dressing and resting or reclining bed.

Further embodiments, modifications and variations may be resorted to within the principle of the invention.

What is claimed is:

1. A convertible suitcase and baby travel bed including a box provided with fixed, longitudinal walls, transverse end walls, and a bottom, the top of the box consisting of longitudinally extending leaves adapted to be closed in meeting position and being hingedly attached to the longitudinal walls; the hingedly attached portions of the walls and leaves being beveled at their inner corners to enable the leaves to be folded down

into the top plane of the top edges of the walls; and end wings adapted to be folded down into the case below the top-forming leaves.

2. A convertible suitcase and baby travel bed including a box provided with fixed, longitudinal walls, transverse end walls, and a bottom, the top of the box consisting of longitudinally extending leaves adapted to be closed in meeting position and being hingedly attached to the longitudinal walls; the hingedly attached portions of the walls and leaves being bevelled at their inner corners to enable the leaves to be folded down into the top plane of the top edges of the walls; and end wings adapted to be folded down into the case below the top-forming leaves, said end wings being hingedly connected to the ends of the side leaves.

3. A convertible suitcase and baby travel bed including a box provided with fixed, longitudinal walls, transverse end walls, and a bottom, the top of the box consisting of longitudinally extending leaves adapted to be closed in meeting position and being hingedly attached to the longitudinal walls, and end wings hingedly connected to the ends of the side leaves.

In testimony whereof I have signed my name to this specification.

RAY M. DODD.