(12) INTERNATIONAL APPLICATION PUBLISHED UNDER THE PATENT COOPERATION TREATY (PCT)

(19) World Intellectual Property Organization
International Bureau

(43) International Publication Date
9 October 2014 (09.10.2014)

WIPO | PCT

(10) International Publication Number
WO 2014/164637 A1

(51) International Patent Classification:
F02F 3/24 (2006.01) *F16K 15/04* (2006.01)

(21) International Application Number:
PCT/US2014/023067

(22) International Filing Date:
11 March 2014 (11.03.2014)

(25) Filing Language: English

(26) Publication Language: English

(30) Priority Data:
61/780,544 13 March 2013 (13.03.2013) US
14/202,001 10 March 2014 (10.03.2014) US

(71) Applicant: **DRESSER-RAND COMPANY** [US/US]; Paul Clark Drive, Olean, New York 14760 (US).

(72) Inventors; and

(71) Applicants : **DUKE, Bryan** [US/US]; 536 West High Street, Painted Post, New York 14870 (US). **CLIFF, Malcolm** [US/US]; 11 Swan Lane, Painted Post, New York 14870 (US). **GOWDY, Chris** [US/US]; 314 W. Pulteney, Corning, New York 14830 (US). **HOSTOTTLE, Robert** [US/US]; 908 Truax Lane, Painted Post, New York 14870 (US). **SHEFFLER, Bryce** [US/US]; Painted Post, New York (US).

(74) Agents: **NOLTE, N. Alexander** et al.; Edmonds & Nolte, PC, 10411 Westheimer Road, Suite 201, Houston, Texas 77042 (US).

(81) Designated States *(unless otherwise indicated, for every kind of national protection available)*: AE, AG, AL, AM, AO, AT, AU, AZ, BA, BB, BG, BH, BN, BR, BW, BY, BZ, CA, CH, CL, CN, CO, CR, CU, CZ, DE, DK, DM, DO, DZ, EC, EE, EG, ES, FI, GB, GD, GE, GH, GM, GT, HN, HR, HU, ID, IL, IN, IR, IS, JP, KE, KG, KN, KP, KR, KZ, LA, LC, LK, LR, LS, LT, LU, LY, MA, MD, ME, MG, MK, MN, MW, MX, MY, MZ, NA, NG, NI, NO, NZ, OM, PA, PE, PG, PH, PL, PT, QA, RO, RS, RU, RW, SA, SC, SD, SE, SG, SK, SL, SM, ST, SV, SY, TH, TJ, TM, TN, TR, TT, TZ, UA, UG, US, UZ, VC, VN, ZA, ZM, ZW.

(84) Designated States *(unless otherwise indicated, for every kind of regional protection available)*: ARIPO (BW, GH, GM, KE, LR, LS, MW, MZ, NA, RW, SD, SL, SZ, TZ, UG, ZM, ZW), Eurasian (AM, AZ, BY, KG, KZ, RU, TJ,

[Continued on next page]

(54) Title: SELF-VENTING PISTON PLUGS

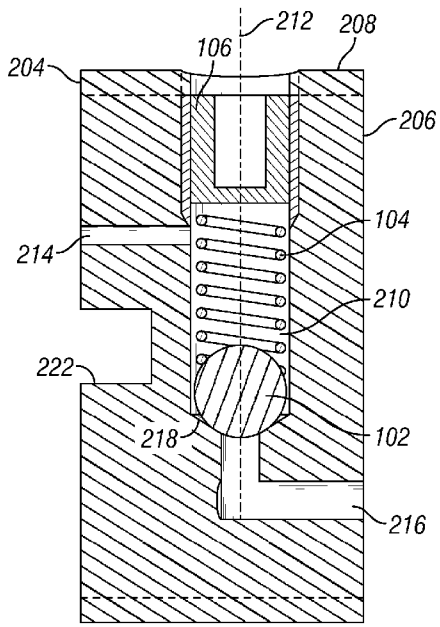

FIG. 2B

(57) Abstract: A piston plug includes a cylindrical body having a longitudinal axis and an outer cylindrical surface. The outer cylindrical surface extends longitudinally between a first surface and a second surface opposite the first surface. The outer cylindrical surface defines a hole extending radially inward. The hole has a central axis perpendicular to the longitudinal axis of the cylindrical body. A first channel and a second channel are defined by cylindrical body. The first channel is in fluidic communication with the first surface and the hole. The second channel is in fluidic communication with the second surface and the hole. The first channel, the second channel, and at least a portion of the hole form a non-collinear flowpath. The piston plug is disposed in a plug hole in a piston and is retained in the plug hole via an interference fit between the piston plug and the plug hole.

WO 2014/164637 A1

TM), European (AL, AT, BE, BG, CH, CY, CZ, DE, DK, EE, ES, FI, FR, GB, GR, HR, HU, IE, IS, IT, LT, LU, LV, MC, MK, MT, NL, NO, PL, PT, RO, RS, SE, SI, SK, SM, TR), OAPI (BF, BJ, CF, CG, CI, CM, GA, GN, GQ, GW, KM, ML, MR, NE, SN, TD, TG).

Published:

— *with international search report (Art. 21(3))*

SELF-VENTING PISTON PLUGS

Cross-Reference to Related Applications

[0001] This application claims priority to U.S. Utility Patent Application having Serial No. 14/202,001, which was filed March 10, 2014 and U.S. Provisional Patent Application having Serial No. 61/780,544, which was filed March 13, 2013. These priority applications are hereby incorporated by reference in their entirety into the present application to the extent consistent with the present application.

Background

[0002] A reciprocating compressor (for example, a high speed reciprocating compressor) is an example of a positive-displacement compressor that uses one or more pistons driven by a crankshaft to deliver working fluids (for example, gases) at high pressure. Generally, the pistons are hollow and have a cavity therein. The reciprocating compressors typically operate to deliver compressed gases having a pressure from about 50 psi to about 2000 psi. Due to this high-pressure operation, gas may enter the cavity of the piston, and the pressure of the gas in the cavity may build over time.

[0003] Generally, as per the safety standards set forth by the American Petroleum Institute (API), any chamber or cavity must be vented (for example, to equalize the pressure in the cavity with the outside pressure). In addition, to prevent excessive wear of parts any debris, such as casting sand, grit, debris due to machining, *etc.*, within a chamber or cavity be contained therein and should not exit the cavity. In order to satisfy these requirements, piston valves or plugs are typically installed on an outer surface of the piston to vent the piston cavity by providing a flowpath for the gas in the piston cavity to exit the piston cavity.

[0004] Figure 1A illustrates a cross-sectional view of a conventional piston plug 100. Figure 1B illustrates a cross-sectional view of a piston 110 in which the piston plug 100 has been installed in a plug hole 128 defined by an outer surface 124 of the piston 110. Referring to Figures 1A and 1B, the piston plug 100 has a ball 102 and a spring 104 axially disposed in a through hole 108 axially defined by the piston plug 100. The ball 102 and the spring 104 are secured in the through hole 108 via a fastener 106. The piston 110 is

disposed to reciprocate axially in a bore 114 in a cylinder 112. A fluid chamber 116 is formed by the piston 110 and the bore 114. An inner surface 126 of the piston 110 is exposed to the fluid chamber 116. The gas in the fluid chamber 116 may enter the piston cavity 111 from the fluid chamber 116. When installed, a bottom surface 122 of the piston plug 100 is exposed to the piston cavity 111 and a top surface 120 of the piston plug 100 may be flush with the outer surface 124 of the piston 110. When the pressure of the gas in the piston cavity 111 reaches or exceeds a predetermined value, the ball 102 is dislodged from its seat (for example, formed via the shoulder in the through hole 108) and the gas in the piston cavity 111 escapes via the piston plug 100. The through hole 108 provides a straight (collinear) flowpath for the gas in the piston cavity 111 to escape.

[0005] Because the through hole 108 of the piston plug 100 forms a flowpath 118 that is straight (collinear), debris inside the piston cavity 111 exits along with the gas in the piston cavity 111. Also, the high-speed, high-pressure operation of the reciprocating compressor may cause frequent breaking of the spring 104. Since the flowpath 118 through the piston plug 100 is collinear and extends along the direction of motion of the piston 110 in the cylinder 112, spring fragments may also exit the piston plug 100 via the through hole 108.

[0006] Accordingly, there is a need for a piston plug that vents the piston cavity and also prevents debris from exiting the piston.

Summary

[0007] Embodiments of the disclosure may provide a piston plug. The piston plug may have a cylindrical body having a longitudinal axis and an outer cylindrical surface extending longitudinally between a first surface and a second surface. The second surface may be opposite the first surface. The outer cylindrical surface may define a hole extending radially inward. The hole may have a central axis perpendicular to the longitudinal axis of the cylindrical body. The piston plug may further include a first channel and a second channel, both defined by the cylindrical body. The first channel may be in fluidic communication with the first surface and the hole. The second channel may be in fluidic communication with the second surface and the hole. The first channel, the second channel, and at least a portion of the hole may form a non-collinear flowpath.

[0008] Embodiments of the disclosure may provide a valve for regulating flow of fluid. The valve may define an inlet channel configured to accept the fluid. The inlet channel may terminate in a hole defined in the valve and extending radially inward from an outer surface of the valve. The hole may have a central axis perpendicular to a longitudinal axis of the valve. The valve may also define an outlet channel configured to eject the fluid. The outlet channel may also terminate in the hole. The inlet channel, the hole, and the outlet channel may form a non-collinear flowpath.

[0009] Embodiments of the disclosure may provide a reciprocating compressor. The reciprocating compressor may include a housing having a bore, a piston slidably disposed in the bore, and a piston plug disposed in the piston. The piston and the bore may define a chamber therebetween. The piston may have an inner surface in fluidic communication with the chamber and an outer surface opposite the inner surface. The piston plug may be disposed in a plug hole defined on the outer surface of the piston. The piston plug may be retained in the plug hole via an interference fit between the piston plug and the plug hole. Further, the piston plug may define a non-collinear flowpath configured to restrict non-fluidic material from passing therethrough.

Brief Description of the Drawings

[0010] The present disclosure is best understood from the following detailed description when read with the accompanying Figures. It is emphasized that, in accordance with the standard practice in the industry, various features are not drawn to scale. In fact, the dimensions of the various features may be arbitrarily increased or reduced for clarity of discussion.

[0011] Figure 1A illustrates a cross-sectional view of a conventional piston plug.

[0012] Figure 1B illustrates a cross-sectional view of a piston having the conventional piston plug of Figure 1A installed therein.

[0013] Figure 2A illustrates a top view of a piston plug, according to example embodiments disclosed.

[0014] Figure 2B illustrates a cross-sectional view of the piston plug of Figure 2A, according to example embodiments disclosed.

[0015] Figure 2C illustrates the piston plug of Figures 2A and 2B with the ball, spring and fastener removed, according to example embodiments disclosed.

[0016] Figure 3A illustrates the piston plug of Figures 2A-2C having a straight thread, according to example embodiments disclosed.

[0017] Figure 3B illustrates the piston plug of Figures 2A-2C having a tapered thread, according to example embodiments disclosed.

Detailed Description

[0018] It is to be understood that the following disclosure describes several exemplary embodiments for implementing different features, structures, or functions of the invention. Exemplary embodiments of components, arrangements, and configurations are described below to simplify the present disclosure; however, these exemplary embodiments are provided merely as examples and are not intended to limit the scope of the invention. Additionally, the present disclosure may repeat reference numerals and/or letters in the various exemplary embodiments and across the Figures provided herein. This repetition is for the purpose of simplicity and clarity and does not in itself dictate a relationship between the various exemplary embodiments and/or configurations discussed in the various Figures. Moreover, the formation of a first feature over or on a second feature in the description that follows may include embodiments in which the first and second features are formed in direct contact, and may also include embodiments in which additional features may be formed interposing the first and second features, such that the first and second features may not be in direct contact. Finally, the exemplary embodiments presented below may be combined in any combination of ways, *i.e.*, any element from one exemplary embodiment may be used in any other exemplary embodiment, without departing from the scope of the disclosure.

[0019] Additionally, certain terms are used throughout the following description and claims to refer to particular components. As one skilled in the art will appreciate, various entities may refer to the same component by different names, and as such, the naming convention for the elements described herein is not intended to limit the scope of the invention, unless otherwise specifically defined herein. Further, the naming convention used herein is not intended to distinguish between components that differ in name but not

function. Additionally, in the following discussion and in the claims, the terms "including" and "comprising" are used in an open-ended fashion, and thus should be interpreted to mean "including, but not limited to." All numerical values in this disclosure may be exact or approximate values unless otherwise specifically stated. Accordingly, various embodiments of the disclosure may deviate from the numbers, values, and ranges disclosed herein without departing from the intended scope. Furthermore, as it is used in the claims or specification, the term "or" is intended to encompass both exclusive and inclusive cases, *i.e.*, "A or B" is intended to be synonymous with "at least one of A and B," unless otherwise expressly specified herein.

[0020] Figure 2A illustrates a top view of a piston valve or plug 200, according to example embodiments disclosed. The piston plug 200 may have a generally cylindrical body defining a longitudinal axis 202 (Figure 2C) and having a top surface 204, a bottom surface 206 (Figures 2B and 2C), and an outer cylindrical surface 208. Also illustrated in phantom, are the ball 102 and the spring 104 secured in the piston plug 200 via the fastener 106. The fastener 106 may be any conventional fastener such as a screw, nut, plug, or the like that may secure the ball 102 and the spring 104 in a partially drilled hole 210 of the piston plug 200 (see below).

[0021] Figure 2B illustrates a sectional view of the piston plug 200 taken along the line 2B-2B in Figure 2A, according to example embodiments disclosed. The piston plug 200 may define a blind hole or a partially drilled hole 210 having a central axis 212 perpendicular to the longitudinal axis 202 (Figure 2C) of the piston plug 200. A blind hole or a partially drilled hole may refer to a hole that is reamed, drilled, or milled to a specified depth, thus without breaking through to the other side of a workpiece, herein, the piston plug 200. The partially drilled hole 210 may be at least partially defined by the outer cylindrical surface 208 of the piston plug 200. As illustrated, a first channel 214 may be formed in the piston plug 200. The first channel 214 may be in fluidic communication with the partially drilled hole 210 and the top surface 204 of the piston plug 200. Returning briefly to Figure 2A, Figure 2A illustrates the opening of the first channel 214 on the top surface 204 of the piston plug 200. Referring to Figure 2B, a second channel 216 may be formed in the piston plug 200. As illustrated, the second channel 216 may be an L-shaped

channel in fluidic communication with a bottom 218 of the partially drilled hole 210 and the bottom surface 206 of the piston plug 200.

[0022] As illustrated in Figure 2B and more clearly in Figure 2C, the bottom 218 of the partially drilled hole 210 may define an angle α with the inner sidewall 228 (Figure 2C) of the partially drilled hole 210, thereby providing a seat for the ball 102. In an exemplary embodiment, the angle α is of about 118°; however, embodiments in which angle α is greater or lesser than 118° are contemplated herein. Accordingly, in an embodiment, angle α may range from about 114° to about 120°. Figure 2C illustrates the piston plug 200 of Figure 2B with the ball 102, spring 104, and the fastener 106 removed. Figure 2C illustrates a flowpath 220 formed by the first channel 214, the second channel 216, and at least a portion of the partially drilled hole 210.

[0023] As seen in Figures 2B and 2C, the flowpath 220 in the piston plug 200 is not straight or collinear (for example, includes bends or turns). In contrast, the flowpath 118 in the conventional piston plug 100 is a straight path (collinear) through the piston plug 100. This flowpath 220, also referred to as a labyrinth type flowpath, may prevent debris and other non-fluidic material (for example, material other than gas or liquid) from exiting the piston 110. Further, the orientation (perpendicular to the motion of the piston 110 and the longitudinal axis 202) of the ball 102 and the spring 104 in the partially drilled hole 210 may reduce an inertial force acting on the ball 102 and the spring 104, thereby reducing the failure rate of the spring 104.

[0024] As seen in Figures 2A-2C, the top surface 204 of the piston plug 200 may have a notch 222 designed to facilitate screwing of the piston plug 200 into the piston 110. It should be noted that, when installed in the piston 110, the piston plug 200 may be orientated in the same way as the piston plug 100 in the piston 110, and the top surface 204 of the piston plug 200 may be flush with the outer surface 124 of the piston 110.

[0025] Figure 3A illustrates the piston plug 200 having a straight thread 224 on the outer cylindrical surface 208, according to example embodiments disclosed. The straight thread 224 may be a nonstandard straight thread. As is know, thread profiles, for example, the major diameter, the pitch diameter, and the like, are calculated as per standards set forth by an international standard-setting body, for example, the International Organization for Standardization (ISO). A straight thread having profiles based on these standards may be

referred to as a standard straight thread. In the instant case, the straight thread 224 is a nonstandard straight thread, since the profiles of the straight thread 224 may not adhere to the defined standards. For example, the straight thread 224 may have a pitch diameter greater than a pitch diameter calculated as per the standard. In another example embodiment, the major diameter or any other thread profile may be varied from the defined standard to create a nonstandard straight thread.

[0026] However, the threads in the plug hole 128 of the piston 110 may be standard straight threads (for example, class 3 threads). As a result, when the piston plug 200 is screwed in piston 110, interaction between the standard threads of the plug hole 128 and the nonstandard threads of the piston plug 200 may provide an interference fit therebetween. As a result of the interference fit, the piston plug 200 may be secured in the piston 110 without requiring any additional mechanical and/or chemical methods. In contrast, since the conventional piston plug 100 has a standard thread, additional mechanical and/or chemical methods are required to secure the conventional piston plug 100 in the piston 110. For example, an additional mechanical method may include peening the piston plug 100 to secure the piston plug 100 in the piston 110. Since no additional mechanical and/or chemical methods are required to secure the piston plug 200, manufacturing time may be reduced.

[0027] Figure 3B illustrates the piston plug 200 having a tapered thread 226 as defined by the National Pipe Thread Taper (NPT) standard, according to example embodiments disclosed. When a piston plug having tapered thread is used, the threads in the plug hole may also be correspondingly tapered to accept the piston plug. In contrast to standard straight threads, a tapered thread 226 will pull tight when screwed and therefore make a fluid-tight seal. Regardless of the type of thread on the piston plug 200, it should be noted that, when installed, the top surface 204 of the piston plug 200 is flush with the outer surface 124 of the piston 110.

[0028] The foregoing has outlined features of several embodiments so that those skilled in the art may better understand the present disclosure. Those skilled in the art should appreciate that they may readily use the present disclosure as a basis for designing or modifying other processes and structures for carrying out the same purposes and/or achieving the same advantages of the embodiments introduced herein. Those skilled in

the art should also realize that such equivalent constructions do not depart from the spirit and scope of the present disclosure, and that they may make various changes, substitutions, and alterations herein without departing from the spirit and scope of the present disclosure.

Claims

We claim:

1. A piston plug, comprising:

a cylindrical body having a longitudinal axis and an outer cylindrical surface extending longitudinally between a first surface and a second surface opposite the first surface, the outer cylindrical surface defining a hole extending radially inward, such that the hole has a central axis perpendicular to the longitudinal axis of the cylindrical body;

a first channel in fluidic communication with the first surface and the hole; and

a second channel in fluidic communication with the second surface and the hole, the first channel, the second channel, and at least a portion of the hole forming a non-collinear flowpath.

2. The piston plug of claim 1, wherein the flowpath is configured to restrict flow of non-fluidic material.

3. The piston plug of claim 1, wherein a notch is defined on at least one of the first surface and the second surface.

4. The piston plug of claim 1, wherein a straight thread is defined on the outer cylindrical surface.

5. The piston plug of claim 4, wherein the straight thread is a nonstandard straight thread configured to provide an interference fit.

6. The piston plug of claim 1, wherein a tapered thread is defined on the outer cylindrical surface.

7. The piston plug of claim 1, further comprising:

a ball and a spring disposed in the hole; and

a fastener disposed in the hole and configured to retain the ball and the spring in the hole.

8. The piston plug of claim 1, wherein the hole is a partially drilled hole and a bottom of the partially drilled hole forms an angle of about 118° with an inner sidewall of the partially drilled hole.

9. The piston plug of claim 8, wherein the first channel is in fluidic communication with the inner sidewall of the partially drilled hole and the second channel is in fluidic communication with the bottom of the partially drilled hole.

10. A valve for regulating a flow of fluid, comprising:

an inlet channel configured to accept the fluid, the inlet channel terminating in a hole extending radially inward from an outer surface of the valve, the hole having a central axis perpendicular to a longitudinal axis of the valve; and

an outlet channel configured to eject the fluid, the outlet channel terminating in the hole, such that the inlet channel, the hole, and the outlet channel form a non-collinear flowpath.

11. The valve of claim 10, wherein a straight thread is defined on the outer surface of the valve.

12. The valve of claim 11, wherein the straight thread is a nonstandard straight thread configured to provide an interference fit.

13. The valve of claim 10, wherein a tapered thread is defined on the outer surface of the valve.

14. The valve of claim 10, wherein the valve has a cylindrical body having the outer surface extending longitudinally between two opposite circular surfaces, one of the two circular surfaces defining a notch.

15. The valve of claim 10, wherein the flowpath is configured to restrict a flow of non-fluidic material.

16. A reciprocating compressor, comprising:

a housing having a bore;

a piston slidably disposed in the bore, the piston and the bore defining a chamber therebetween, the piston having an inner surface in fluidic communication with the chamber and an outer surface opposite the inner surface; and

a piston plug disposed in a plug hole defined on the outer surface, the piston plug being retained in the plug hole via an interference fit between the piston plug and the plug hole, and the piston plug defining a non-collinear flowpath configured to restrict non-fluidic material from passing therethrough.

17. The reciprocating compressor of claim 16, wherein the piston plug comprises:

a cylindrical body having a longitudinal axis and defining:

a partially drilled hole extending radially inward from an outer cylindrical surface of the cylindrical body, the partially drilled hole having a central axis perpendicular to the longitudinal axis;

a first channel in fluidic communication with a first circular surface of the cylindrical body and the partially drilled hole, the first circular surface being flush with the outer surface of the piston; and

a second channel in fluidic communication with a second circular surface of the cylindrical body and the partially drilled hole, the second circular surface being opposite the first circular surface,

wherein at least a portion of the partially drilled hole, the first channel, and the second channel form the non-collinear flowpath.

18. The reciprocating compressor of claim 17, wherein a bottom of the partially drilled hole forms an angle of about 118° with an inner sidewall of the partially drilled hole, and wherein the first channel is in fluidic communication with the inner sidewall of the partially

drilled hole and the second channel is in fluidic communication with the bottom of the partially drilled hole.

19. The reciprocating compressor of claim 17, wherein the piston plug defines a nonstandard straight thread on the outer cylindrical surface, the nonstandard straight thread configured to provide the interference fit between the piston plug and the plug hole.

20. The reciprocating compressor of claim 17, wherein the piston plug defines a tapered thread on the outer cylindrical surface.

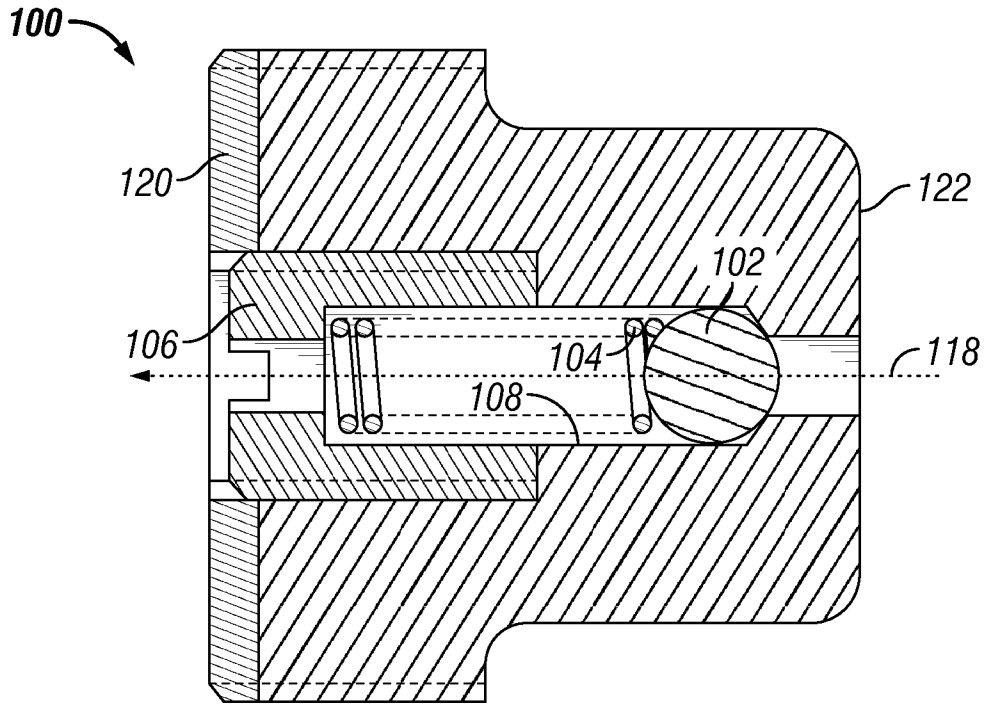
100
120
122
102
106
104
118
108

FIG. 1A

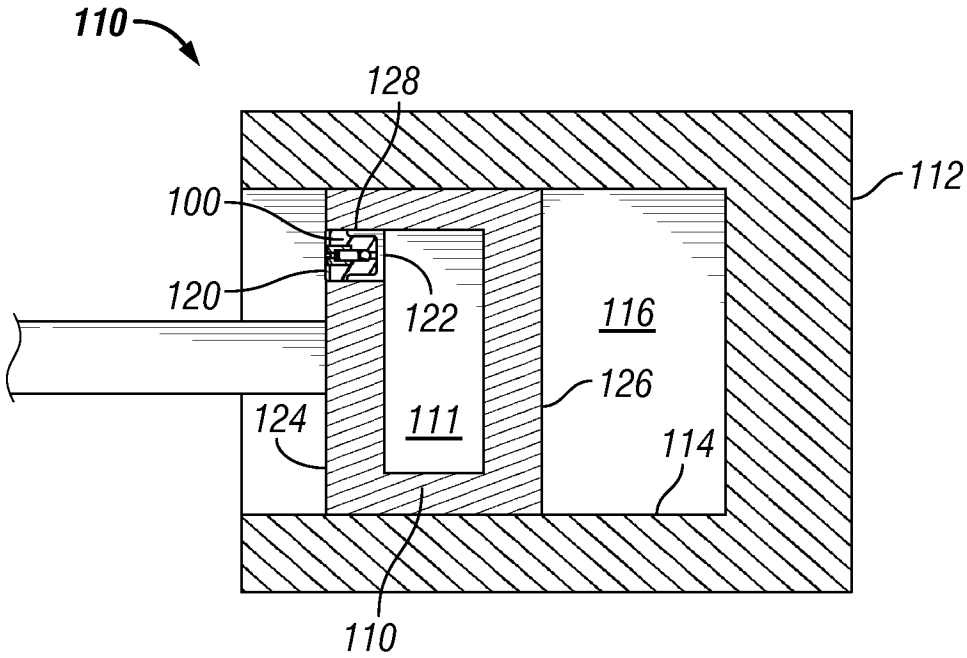
110
128
112
100
120
122
116
126
124
111
114
110

FIG. 1B

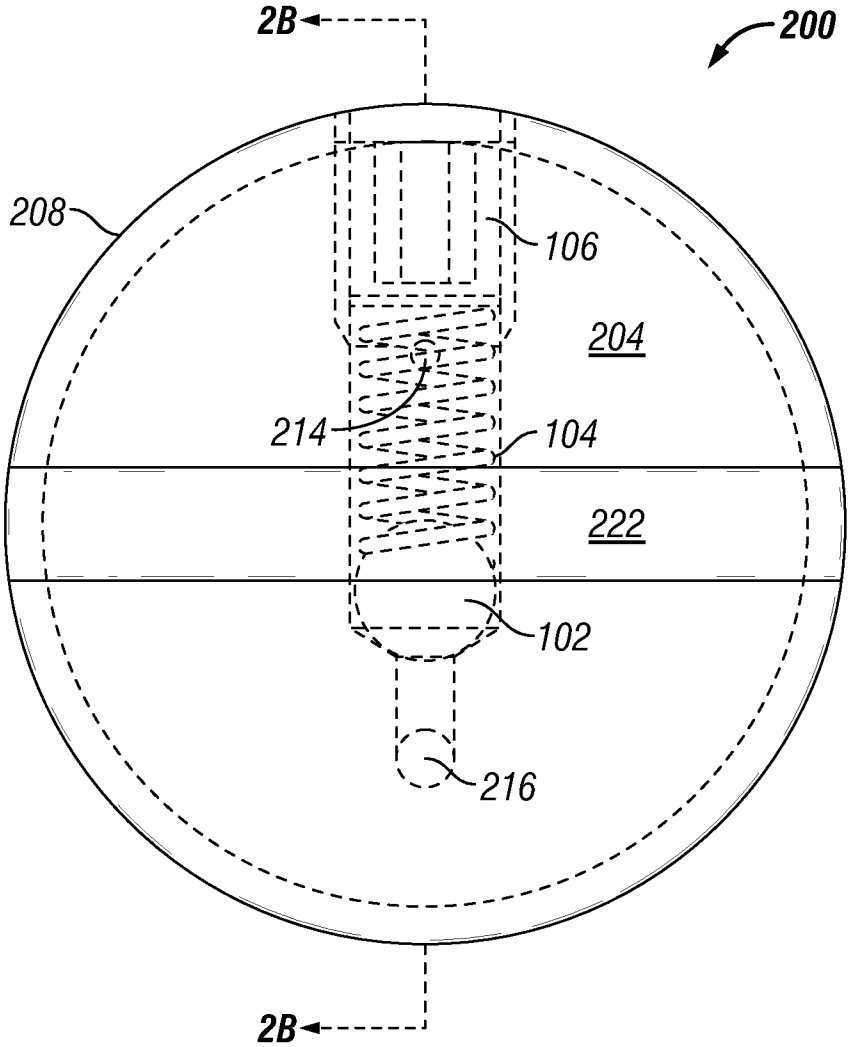

FIG. 2A

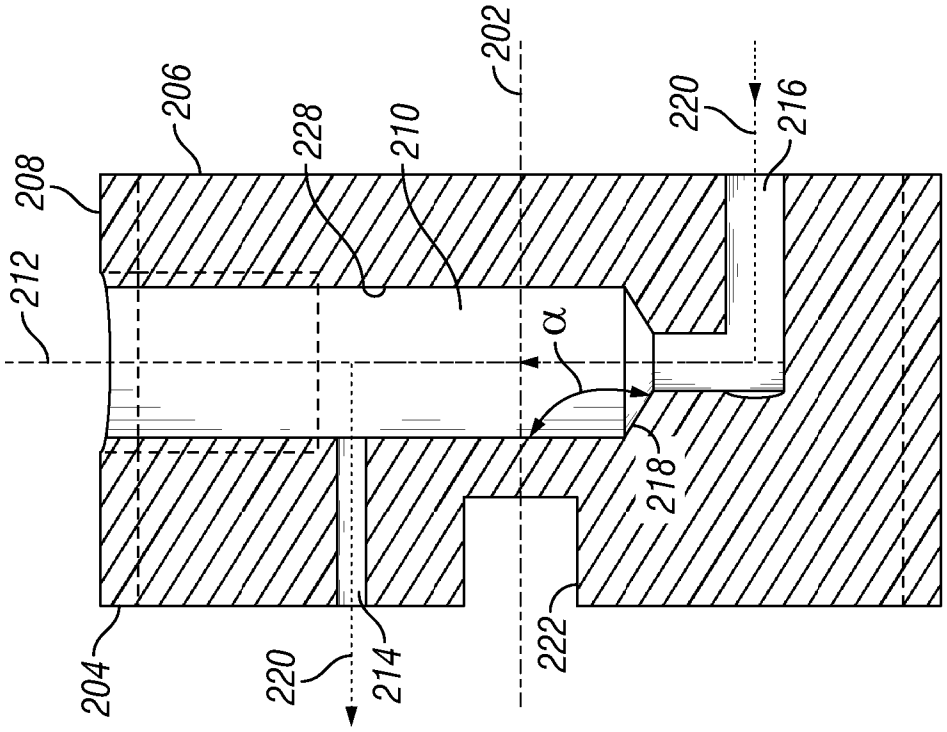
202
206
228
210
220
216
208
212
α
218
204
220
214
222

FIG. 2C

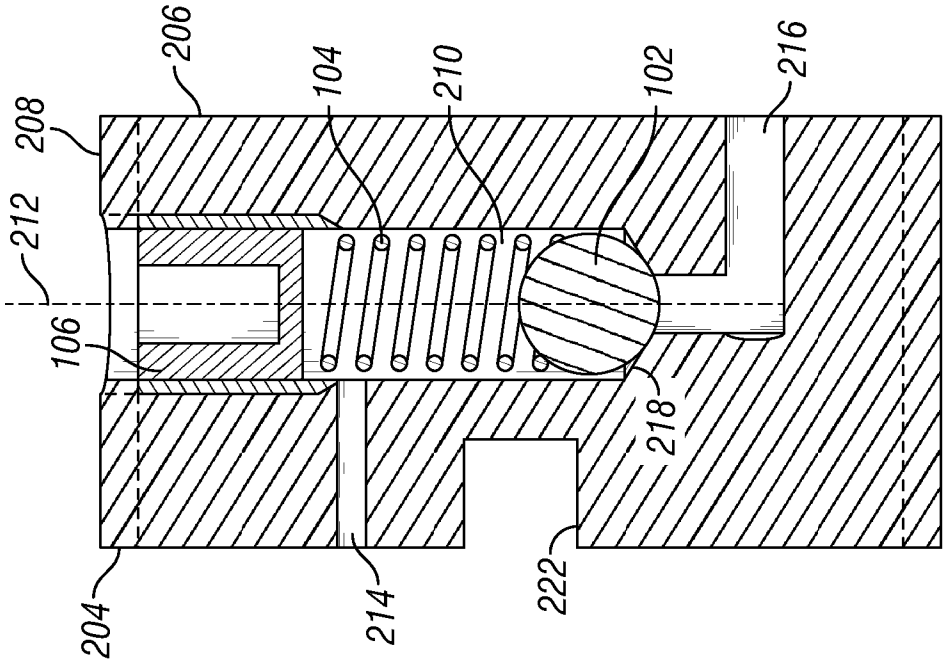
206
104
210
102
216
208
212
106
218
204
214
222

FIG. 2B

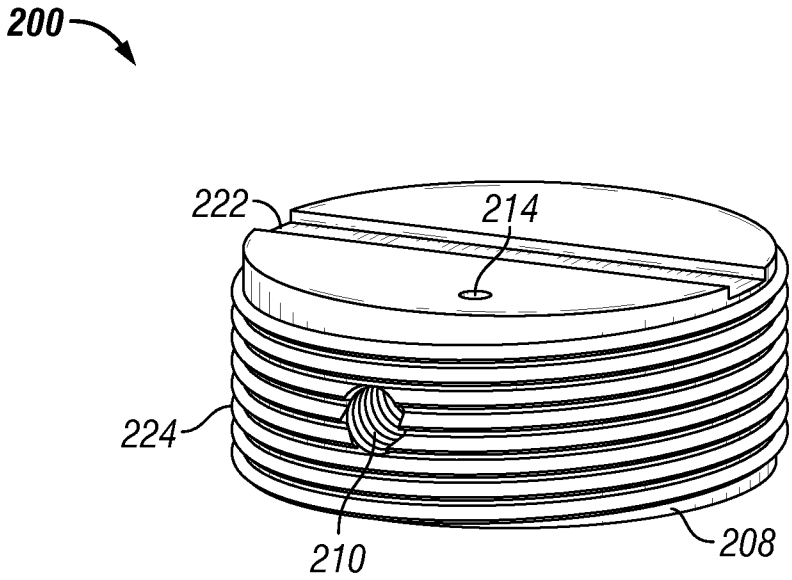

FIG. 3A

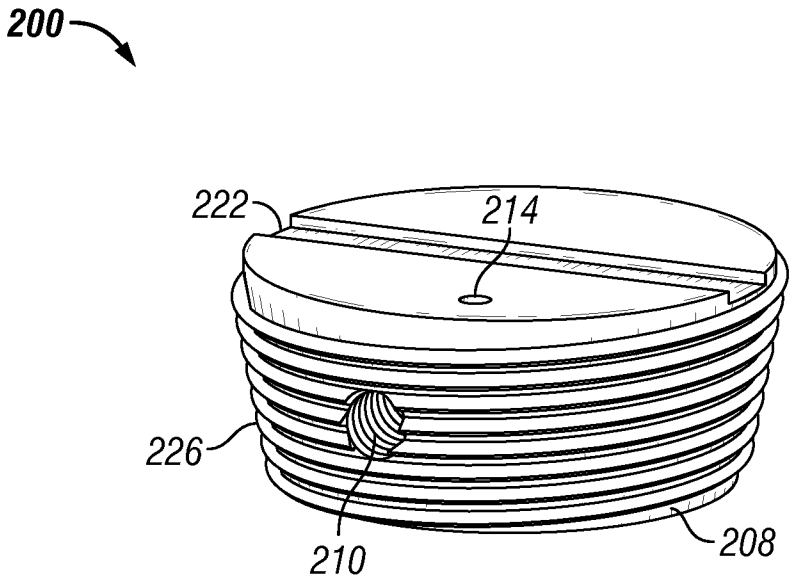

FIG. 3B

INTERNATIONAL SEARCH REPORT

International application No.
PCT/US2014/023067

A. CLASSIFICATION OF SUBJECT MATTER

F02F 3/24(2006.01)i, F16K 15/04(2006.01)i

According to International Patent Classification (IPC) or to both national classification and IPC

B. FIELDS SEARCHED

Minimum documentation searched (classification system followed by classification symbols)
F02F 3/24; B60T 8/40; F04B 25/00; F01M 13/04; F04B 39/00; F02B 53/12; F16K 15/04; F02P 15/04

Documentation searched other than minimum documentation to the extent that such documents are included in the fields searched
Korean utility models and applications for utility models
Japanese utility models and applications for utility models

Electronic data base consulted during the international search (name of data base and, where practicable, search terms used)
eKOMPASS(KIPO internal) & Keywords: reciprocating, compressor, piston, bore, valve, ball, pressure, and plug

C. DOCUMENTS CONSIDERED TO BE RELEVANT

Category*	Citation of document, with indication, where appropriate, of the relevant passages	Relevant to claim No.
X	US 2006-0180209 A1 (RILEY et al.) 17 August 2006 See abstract; paragraphs [0003]-[0009],[0016]-[0018] and figures 1-2.	10
A		1-9,11-20
A	US 2010-0303645 A1 (OHATA et al.) 02 December 2010 See paragraphs [0035]-[0051] and figure 2.	1-20
A	US 7984702 B2 (RUSSELL, ROBERT L.) 26 July 2011 See abstract and column 1, line 42 - column 3, line 11.	1-20
A	KR 10-2007-0060824 A (MANDO CORPORATION) 13 June 2007 See abstract and claim 1.	1-20
A	US 6109251 A (HABERLEIN et al.) 29 August 2000 See column 1, line 34-column 2, line 26 and claim 1.	1-20

☐ Further documents are listed in the continuation of Box C. ☒ See patent family annex.

* Special categories of cited documents:
"A" document defining the general state of the art which is not considered to be of particular relevance
"E" earlier application or patent but published on or after the international filing date
"L" document which may throw doubts on priority claim(s) or which is cited to establish the publication date of another citation or other special reason (as specified)
"O" document referring to an oral disclosure, use, exhibition or other means
"P" document published prior to the international filing date but later than the priority date claimed
"T" later document published after the international filing date or priority date and not in conflict with the application but cited to understand the principle or theory underlying the invention
"X" document of particular relevance; the claimed invention cannot be considered novel or cannot be considered to involve an inventive step when the document is taken alone
"Y" document of particular relevance; the claimed invention cannot be considered to involve an inventive step when the document is combined with one or more other such documents,such combination being obvious to a person skilled in the art
"&" document member of the same patent family

Date of the actual completion of the international search	Date of mailing of the international search report
08 July 2014 (08.07.2014)	**09 July 2014 (09.07.2014)**

Name and mailing address of the ISA/KR
International Application Division
Korean Intellectual Property Office
189 Cheongsa-ro, Seo-gu, Daejeon Metropolitan City, 302-701,
Republic of Korea
Facsimile No. +82-42-472-7140

Authorized officer
HWANG, Chan Yoon
Telephone No. +82-42-481-3347

INTERNATIONAL SEARCH REPORT

Information on patent family members

International application No.
PCT/US2014/023067

Patent document cited in search report	Publication date	Patent family member(s)	Publication date
US 2006-0180209 A1	17/08/2006	AT 367551 T	15/08/2007
		BR PI0600376 A	03/10/2006
		CA 2535473 A1	14/08/2006
		CA 2535473 C	21/04/2009
		DE 602006000039 D1	30/08/2007
		DE 602006000039 T2	17/04/2008
		DK 1691118 T3	12/11/2007
		EP 1691118 A1	16/08/2006
		EP 1691118 B1	18/07/2007
		NO 20060691 A	15/08/2006
		US 7350534 B2	01/04/2008
US 2010-0303645 A1	02/12/2010	CN 101900098 A	01/12/2010
		CN 102213207 A	12/10/2011
		JP 2011-007178 A	13/01/2011
		US 2011-0247486 A1	13/10/2011
		US 8430650 B2	30/04/2013
US 7984702 B2	26/07/2011	US 2009-314238 A1	24/12/2009
KR 10-2007-0060824 A	13/06/2007	None	
US 6109251 A	29/08/2000	JP 2000-054821 A	22/02/2000