W. A. OLIVE.

COPY HOLDER.

APPLICATION FILED AUG. 23, 1915.

1,188,675. Patented June 27, 1916.

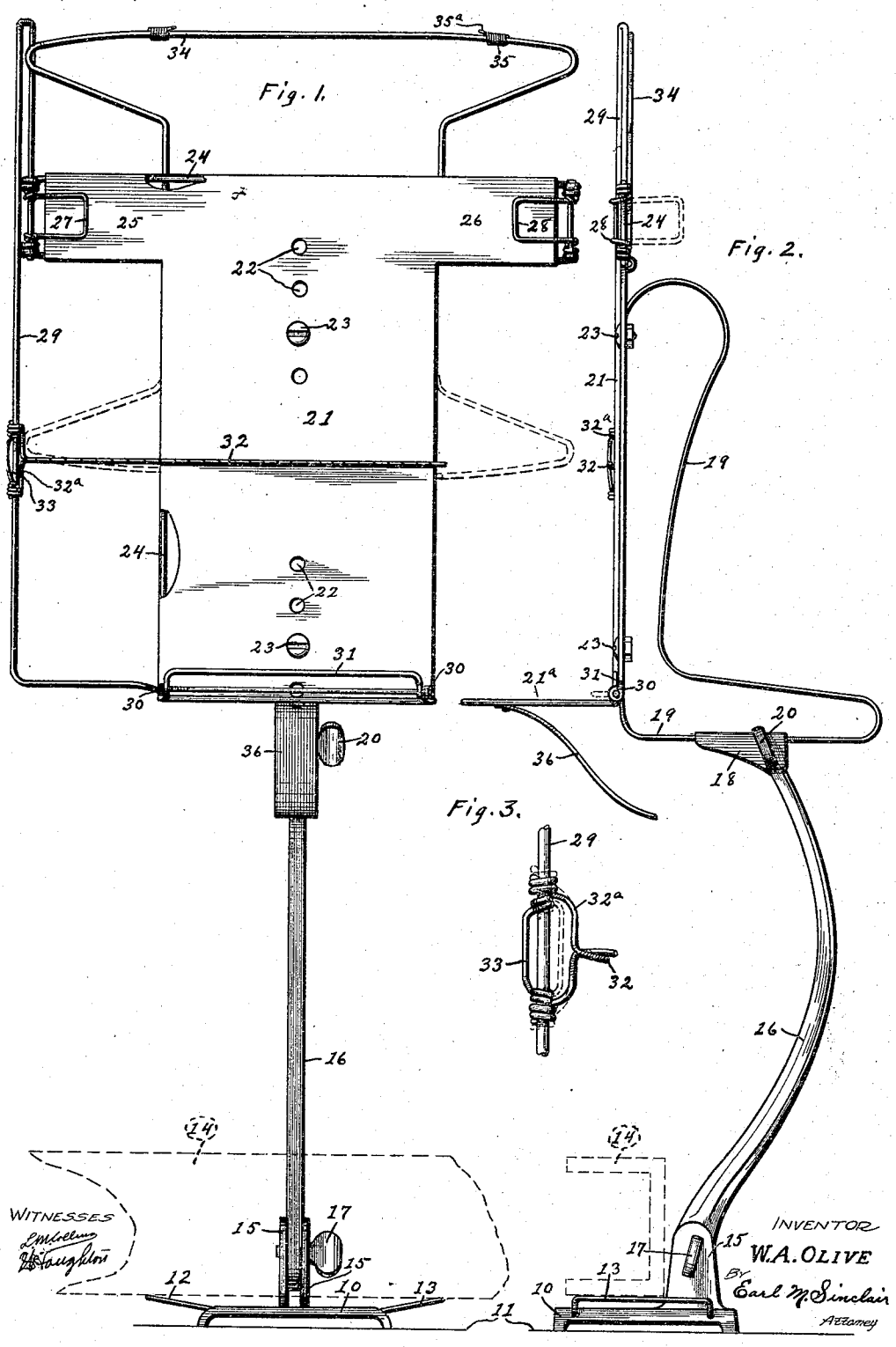

THE COLUMBIA PLANOGRAPH CO., WASHINGTON, D. C.

UNITED STATES PATENT OFFICE.

WALTER A. OLIVE, OF INDIANOLA, IOWA.

COPY-HOLDER.

1,188,675. Specification of Letters Patent. Patented June 27, 1916.

Application filed August 23, 1915. Serial No. 46,831.

To all whom it may concern:

Be it known that I, WALTER A. OLIVE, a citizen of the United States of America, and resident of Indianola, Warren county, Iowa, have invented a new and useful Copy-Holder, of which the following is a specification.

The object of this invention is to provide an improved construction for copy holders adapted especially for use with type-writing machines, and designed to be set directly in front of the operator.

A further object of this invention is to provide improved means for adjusting a copy holder.

A further object of this invention is to provide improved means for holding loose sheets on a copy holder.

My invention consists in the construction, arrangement and combination of elements hereinafter set forth, pointed out in my claims and illustrated by the accompanying drawing, in which—

Figure 1 is a front elevation of my improved device. Fig. 2 is a side elevation of the same. Fig. 3 is a detail, on an enlarged scale, illustrating the locking means for the line marker.

In the construction of the device as shown the numeral 10 designates a base adapted to be mounted on a suitable support, such as a desk, indicated by the line 11. Wings 12, 13, formed of spring wire, extend outwardly and upwardly from opposite sides of the base 10, and the rear frame member 14 of a type-writing machine, indicated by dotted lines, is adapted to rest on said wings and hold the device securely in position, said wings being adjustable by bending to suit the height of the particular machine with which the device is to be used. Apertured ears 15 are formed on and rise from the base 10 and are adapted to receive the apertured lower end portion of a standard 16, and a set screw 17 is threaded through said members to hold said standard in any position in which it may be placed manually, it being understood that said set screw is not set so tight but that the upper end of the said standard may be moved toward or away from the operator as desired. The upper end of the standard 16 is formed with a slide bearing 18 in which a bracket 19, formed of a single length of wire, is mounted for sliding movement toward or away from the operator, and adapted to be secured by a set screw 20 mounted in said bearing. The bracket 19 is so bent that its ends extend forward, on different vertical planes, from the slide bearing 18, and a holder body 21, preferably formed of sheet metal, is formed with vertical lines of apertures 22 through which it is adjustably secured to said bracket ends by means of screw bolts 23. The holder body 21 is provided with a wire frame 24 bent to the same outlines as the said body and to which the body is secured by bending and rolling of its margins on said wire. The frame 24 serves to stiffen and strengthen the holder body 21 and also to receive certain attachments hereinafter set forth. The holder body 21 preferably is formed with integral outwardly extending wings 25, 26 at its upper end, which serve to increase the width of the body at that point to approximately the width of the ordinary sheet of paper used for typewriting. The frame 24 extends slightly beyond the outer margins of the wings 25, 26, and serves as a vertical bearing for clips 27, 28 pivoted thereto and adapted to be turned against the faces of said wings to hold the side margins of a loose sheet of paper (not shown) when it is desired to mount such loose sheet on the holder. The holder body 21, together with its frame 24, is bent forwardly at its lower end, substantially at right angles, to form a foot 21^a, which is adapted to receive and furnish a bottom support for a book or other collection of papers which it may be desired to mount on the device. A guide rod 29 is mounted at one side (the left hand side, preferably) of the holder body 21, and is here shown as formed of a length of wire secured at one end to the frame 24 adjacent the wing 25, extending upwardly a short distance therefrom above the top of the body 21, bent back and extending downwardly parallel with and spaced from the side margin of the body, then bent at right angles and extending laterally across the said body at the angle between the body 21 and foot 21^a, where it is secured by projecting loops or coils 30 of the frame 24. A yoke-shaped

keeper 31 is pivoted on the transverse portion of the guide rod 29, and is adapted to be turned down toward the foot 21ª, (dotted lines Fig. 2), or to be turned back against the lower portion of the body 21, to hold the lower margin of a loose sheet which may be mounted on the device. A line marker 32 is slidingly and pivotally mounted on the guide rod 29, and said marker preferably is formed of a single length of wire having its main portion doubled and twisted together and extending laterally across the body 21, while its end portions are separated in the form of a yoke 32ª with its ends coiled around and forming bearings on the said guide rod.

A locking clip 33 is formed of a short length of wire having its ends spirally coiled on the guide rod 29 between the ends of the yoke 32ª of the line marker, and movable vertically therewith. The locking clip 33 is so constructed and arranged that when it is turned in one direction (to the left) to the position indicated by dotted lines, its spirally coiled end portions will engage and force apart the legs of the yoke 32ª, and cause the said yoke legs to frictionally engage and lock on the guide rod 29, thus preventing sliding movement of the marker 32 and holding it in the position in which it has been placed manually. When the locking clip 33 is turned in the opposite direction the legs of the yoke 32ª assume their normal positions, and the marker is free to slide in either direction on the guide rod 29. A supplementary support 34 is formed in the shape of a yoke and has its ends pivoted to the top of the frame 24. The supplementary support 34 is adapted to be secured in upright position by engagement of one of its side margins between the folds of the upper end of the guide rod 29, when it extends above and forms a continuation of the holder body 21, and is used when papers of considerable length are to be supported on the device. The supplementary support 34 may be disengaged from the guide rod 29 and turned down behind the holder body 21, as indicated by dotted lines in Fig. 1, when it is not wanted for use. A clip 35 preferably is formed of a piece of light wire coiled on the horizontal portion of the supplementary support 34, and is formed with a hook 35ª on one end designed to engage the upper side margin of a sheet on the holder at times, especially when the device is located in the influence of a considerable draft of air. A spring tongue 36 is attached at one end to the central portion of the forward part of the foot 21ª and extends downwardly and rearwardly therefrom. It is the function of the spring tongue to engage a sheet of paper issuing from the type-writing machine and direct it downwardly, so that it will not engage the bracket 19 and become crumpled or mussed.

The chief advantage of this copy holder is its location behind the type-writing machine and directly in front of the operator, where the copy may be read without turning of the head, which results in loss of time. The wings 12, 13 of the base may be adjusted so that the device will be securely held by any make of machine. Provision is made for securing on the holder a great variety of styles of books, note-books or papers. A book of considerable size and weight may be set upright on the foot 21ª and rest against the holder body 21. An end-opening note-book may be folded back over and suspended on the top of the holder body, and in the case of an extra long note-book, or collection of papers, the supplementary support 34 may be employed in the same manner. Loose sheets may be supported on the foot 21ª and against the body 21, and held by the clips 27, 28, keeper 31 and hook 35ª.

The entire holder body and devices attached thereto may be moved and adjusted toward or away from the operator by adjustment of the bracket 19 in the bearing 18, or by turning the upper end of the standard 16 through an arc on the screw 17. The holder body 21 may be set in a rearwardly inclined position by turning the upper end of the standard 16 rearwardly through an arc from the position shown in Fig. 2.

The line marker 32 may be used or not as desired, and when used is very convenient because of the fact that it may be secured on the guide rod 29 as described, and moved manually from its position by the application of a little force to overcome the binding effect of the yoke 32ª on said guide rod, even when the clip 33 is in locking position.

I claim as my invention—

1. A device of the class described, comprising a base, a standard rising therefrom, a bracket carried by said standard, and a holder carried by said bracket, said holder having a vertical body and a forwardly extending foot at the base thereof, a vertical guide rod at one side of said body, said guide rod being folded or doubled at its upper end, together with a supplementary support pivoted at the top of said body and adapted to be secured in upright position by engagement between the folds of said guide rod.

2. A device of the class described, comprising a base, a standard rising therefrom, a bracket carried by said standard, and a holder adjustably carried by said bracket, said holder having a body and a forwardly extending foot at the base thereof, a vertical guide rod at one side of said body, said guide

rod being folded or doubled at its upper end, together with a supplementary support pivoted at the top of said body, said support having a lateral extension adapted to be engaged between the folds of said guide rod to hold the supplementary support in upright position.

Signed by me at Des Moines, Iowa, this 17th day of August, 1915.

WALTER A. OLIVE.

Witnesses:
EARL M. SINCLAIR,
R. B. DENNIS.

Copies of this patent may be obtained for five cents each, by addressing the "Commissioner of Patents, Washington, D. C."