G. M. THOMAS.

INSTRUMENT HOLDER.

APPLICATION FILED MAR. 4, 1919.

1,321,951.

Patented Nov. 18, 1919.

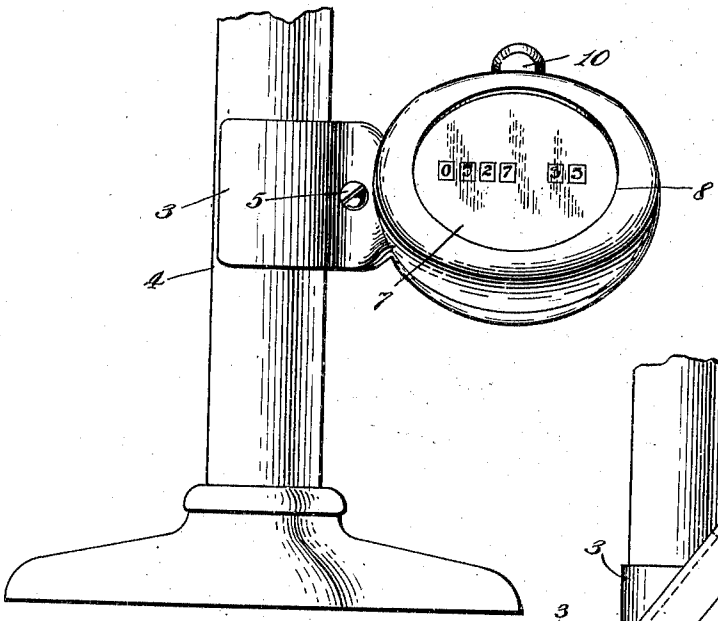

FIG. 1.

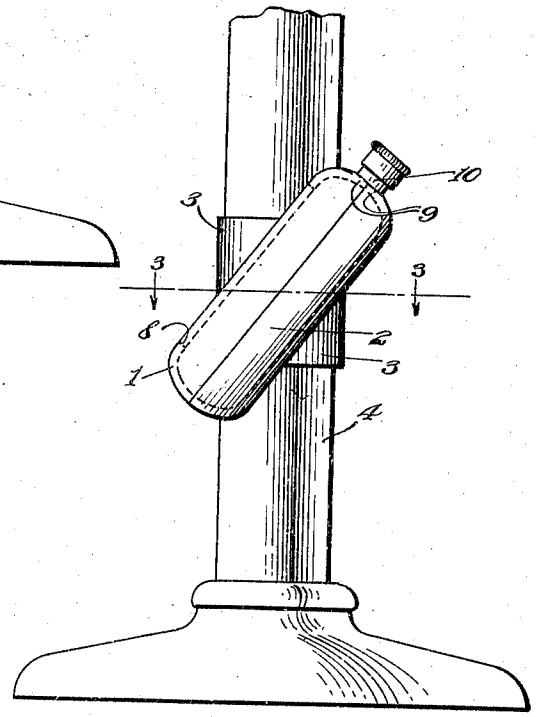

FIG. 2.

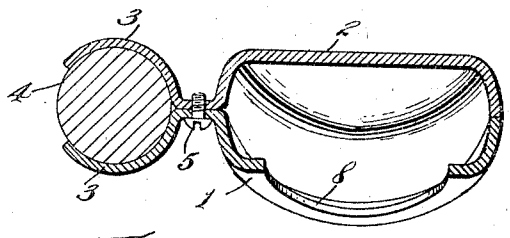

FIG. 3.

INVENTOR,
GEORGE M THOMAS.
BY John A. Bonnhardt
ATT'Y.

UNITED STATES PATENT OFFICE.

GEORGE M. THOMAS, OF CLEVELAND, OHIO.

INSTRUMENT-HOLDER.

1,321,951. Specification of Letters Patent. **Patented Nov. 18, 1919.**

Application filed March 4, 1919. Serial No. 280,649.

To all whom it may concern:

Be it known that I, GEORGE M. THOMAS, a citizen of the United States, residing at Cleveland, in the county of Cuyahoga and State of Ohio, have invented certain new and useful Improvements in Instrument-Holders, of which the following is a specification.

This invention relates to supports particularly adapted and intended for supporting a counting machine on the post of a telephone, although capable of use in any other relation where it is desired to support an instrument such as a counter or the like, in a convenient position for operation.

The invention is illustrated in the accompanying drawings, in which—

Figure 1 is a front elevation of the device applied to the telephone standard.

Fig. 2 is a side elevation thereof.

Fig. 3 is a section on the line 3—3 of Fig. 2.

In the drawings, 4 indicates the standard or post of a telephone transmitter. The device is made in two parts, indicated at 1 and 2 respectively. Each of these parts has a curved jaw 3, adapted to embrace the post 4, the parts being fastened together by a screw 5, extending through a connecting neck adjacent to the jaws. The rear part 2 is cup shaped, and the front part 1 is similarly shaped to match therewith at its edges, and to form a holder for the counting instrument or similar device, indicated at 7. The front of part 1 has an opening 8 to expose the face of the instrument, and at the top the meeting edges of the sections have recesses 9, which register to form an opening for the stem 10 of the instrument. The body of the holder is disposed at an angle so that the instrument may be conveniently read.

If used on a telephone, it will be especially serviceable for registering the number of phone calls, the counting instrument being operated at the time the phone is used. The holder can be cheaply made by pressing its parts from sheet metal, and quickly applied to the phone or other support by means of the screw 5.

I claim:

1. An instrument holder comprising two sections fastened together, each section having a jaw adapted to grip a support, and one section having an opening through which the face of the instrument may be seen.

2. An instrument holder comprising a pair of cupped sections secured together, each section having a jaw at one side thereof adapted to grip a support, and one section having an opening through which the face of the instrument may be seen.

3. An instrument holder comprising a pair of cupped sections which meet at the rims thereof, to inclose an instrument, said sections being fastened together and having jaws at one side to embrace a support, one of the sections having an opening through which the face of the instrument may be seen.

In testimony whereof, I affix my signature in presence of two witnesses.

GEORGE M. THOMAS.

Witnesses:

JOHN A. BOMMHARDT,

ROBERT L. BRUCK.