May 2, 1967 W. T. DAILEY 3,316,861

PALLET FOOT

Filed April 6, 1966

FIG.1

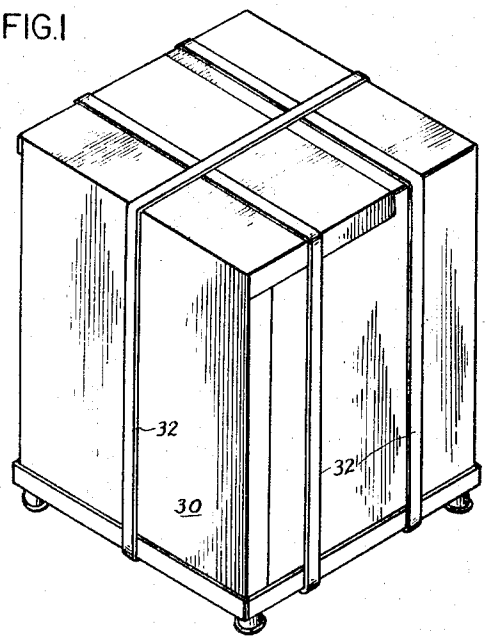

FIG.2

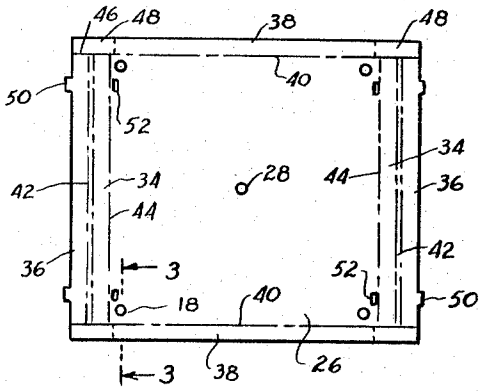

FIG.3

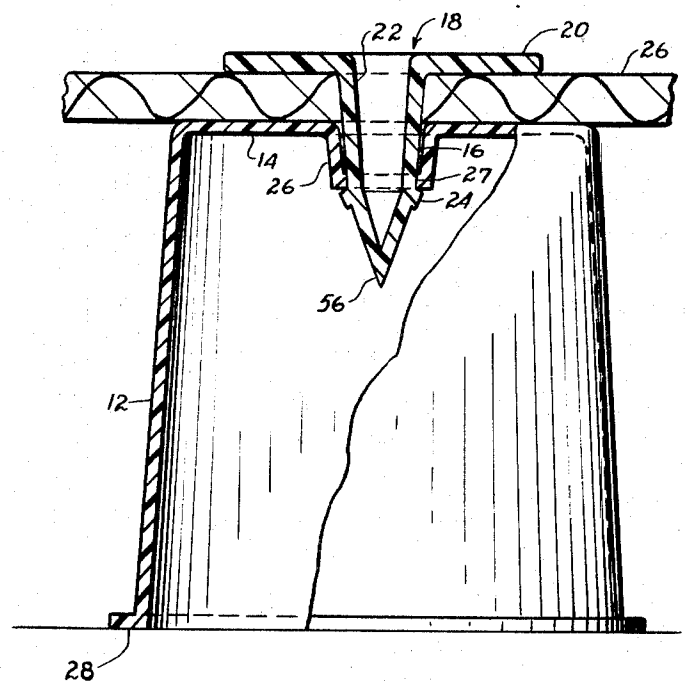

FIG.4

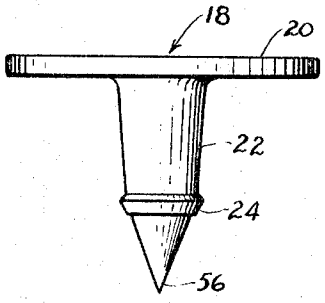

FIG.5

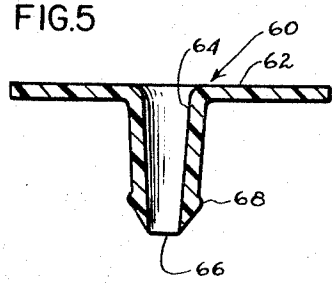

INVENTOR.
WILLIAM T. DAILEY

BY James and Franklin

ATTORNEYS

United States Patent Office 3,316,861 Patented May 2, 1967

3,316,861

PALLET FOOT

William T. Dailey, Manhasset, N.Y., assignor to Interstate Container Corporation, New York, N.Y., a corporation of New York

Filed Apr. 6, 1966, Ser. No. 540,560
9 Claims. (Cl. 108—51)

This invention relates to pallets and self-palletted cartons, and more particularly to feet for the same.

Shipment on slightly raised pallets is widely used in order to facilitate the use of fork lift trucks. Pallets made wholly of wood are relatively heavy and expensive and usually must be returned at considerable expense rather than being dicarded. They also have the disadvantage that the fork of a fork lift truck can enter the pallet in only one direction.

It has also been suggested to use a cup shaped foot the open top of which is adhesively taped beneath a carton which is to be self-palletted.

The prime object of the present invention is to generally improve pallets and self-palletted cartons, and a more particular object is to provide an improved pallet foot.

To accomplish the foregoing general objects and other more specific objects which will hereinafter appear, my invention resides in the pallet foot assembly and the interrelated elements thereof as are hereinafter more particularly described in the following specification. The specification is accompanied by a drawing in which:

FIG. 1 is a perspective view of a closed shipping container mounted on pallet feet;

FIG. 2 shows the flat generally rectangular blank of corrugated board from which the bottom of the carton shown in FIG. 1 is formed, with pallet feet secured therebeneath;

FIG. 3 is a vertical section through a pallet foot assembly, taken for example in the plane of the line 3—3 of FIG. 2;

FIG. 4 is a vertical elevation of the fastener of the pallet foot assembly; and

FIG. 5 is a vertical section through a modified fastener which may be used with the foot shown in FIG. 3.

Referring to the drawing and more particularly to FIG. 3, the pallet foot assembly comprises an inverted cup shaped foot **12** having a flat top **14** with a hole at **16**. The assembly further comprises a fastener **18** having a flat head **20** of relatively large diameter, and a shank **22** dimensioned to pass through the hole **16** in the foot. The lower end of the shank is slightly enlarged at **24** to lock the foot **12** and the fastener **18** together after the fastener shank has passed downward through the pallet **26** and into the foot **12**.

The hole in the foot is preferably a reentrant hole forming a reentrant tube **26** extending downward inside the foot. The shank **22** is appropriately lengthened so that the enlargement **24** comes below the lower end of the reentrant tube **26**. This construction helps hold the flat head **20** and the flat top **14** in parallel relation. The ledge at **24** tapers downward on bottom to aid assembly, and tapers upward on top to exert a continuing compression of the pallet material between the head and the foot.

The foot **12** and the fastener **18** are preferably molded out of a suitable plastics material which preferably is somewhat elastic. In the form shown in FIGS. 3 and 4 the shank **22** of the fastener is closed and pointed at its lower end. The bottom of the foot **12** preferably has a peripheral flange **28** which enlarges its bearing surface. This is desirable in case the feet rest on earth instead of a paved surface, and also in case the palletted cartons are piled one on another.

For structural reasons and also to facilitate the molding operation the foot **12** preferably tapers upward, and the reentrant tube **26** tapers downward, as shown in the drawing. The amount of taper is not critical, but in a typical case may be three degrees from vertical. The shank **22** preferably is tapered like the reentrant tube **26**, so that the parts have substantially parallel surfaces. The lower end of tube **26** may have a slight ledge indicated at **27**.

The pallet board **26** may be a corrugated paper board. It serves primarily as a spacer to properly locate the pallet feet, and it may be strapped to the bottom of the carton or the goods being palletted. In most cases four feet at the four corners are enough, but if the pallet (or self-palletted carton) is very large, a fifth foot may be provided at the center as shown at **28** in FIG. 2.

The board shown in FIG. 2 is somewhat more complex because it is designed to provide a peripheral flange to be used with the particular shipping container shown in FIG. 1, but if used as a flat pallet it would comprise simply pallet feet like that shown in FIG. 3, combined with a corrugated board **26** having holes receiving the shanks of the feet to secure the feet in position beneath the board.

The improved pallet foot here shown may be used as part of a self-palletted container disclosed in copending application Ser. No. 460,912, filed June 3, 1965, now Patent No. 3,281,049, and entitled Pallet-Container, and also that shown in copending application Ser. No. 476,041, filed July 30, 1965, entitled Pallet Container for Front Loading. The latter container is here shown in FIGS. 1 and 2 of the drawing.

It is a very large container for so-called "unit loading," which is the shipment of smaller parcels and cartons in a large palletted container in order to secure a lower shipping rate. The container is open at the front when being loaded, to avoid a high lift, and the front **30** (FIG. 1) is added last before taping the assembly by tapes such as those indicated at **32**.

The bottom sheet **26** (FIG. 2) has a length equal to the length of the container plus two double flanges **34** and **36**, and it has a width equal to the width of the container plus two single flanges **38**. The sheet **26** is scored on lines **40** to define the flanges **38**. It is scored on closely adjacent parallel lines **42** to define the middle or top fold of the double flanges, and it is scored on lines **44** to define the bottom fold of the outer flange **34**. The blank is severed at **46** near the four corners, at the ends of the double flanges, to form locking tabs **48** which extend horizontally from the ends of the flanges **38**.

The free edges of the double flanges have stub tongues **50**, and the bottom has mating slots **52** to receive the tongues in order to hold the double flanges in erect position. The tabs **48** act as locking tabs which are received within the double flanges so that the flanges **38** also are held erect.

As so far described it has been assumed that the pallet board already has holes, which usually are die cut holes. However, this is not essential, and in FIGS. 3 and 4 it will be seen that the lower end of the fastener is closed and is sharply pointed downward as shown at **56**. It is thereby made usable to penetrate a paper board pallet which does not have a previously made hole to receive the same. The pointed shank may be used also with die cut holes, for greater ease of application. The point helps align the parts.

However, if it is known that the holes will be die cut holes the shank may be made without a point. For example, it may be made as shown in FIG. 5, in which the fastener **60** has a flat head **62** of large area, and a shank **64**, much as previously described, but in this case the shank is open at both ends, the lower end being open as

shown at 66. A ledge is provided at 68, properly dimensioned to engage the pallet foot with a snap fit, as previously described.

The pallet foot and the fastener may be molded out of a suitable plastics material, preferably a high density linear polyethylene. In the particular case illustrated the pallet foot has a height of four inches, and a diameter a little over four inches at the bottom, and a wall thickness of one-eighth inch. The reentrant opening has a depth of one-half inch from the top. The fastener has a diameter of about two and one-half inches at the head. The shank is dimensioned to fit the pallet foot, and its length takes into consideration the thickness of the pallet material itself. The foot may be made in other sizes, for example, with a height of three inches.

It will be understood that these dimensions are given by way of example, and are not intended to be in limitation of the invention.

It is believed that the construction and method of use of my improved pallet foot, as well as the advantages thereof, will be apparent from the foregoing detailed description. It will also be apparent that while I have shown and described the same in a preferred form, changes may be made without departing from the scope of the invention, as sought to be defined in the following claims.

I claim:

1. A pallet foot assembly designed for use with a corrugated paperboard pallet, said foot assembly comprising a tapered cup shaped foot, said foot being inverted so that it is closed at the top and open at the bottom, said foot being upwardly tapered and having a flat top with a hole, and a fastener to secure said foot to a pallet and beneath said pallet, said fastener having a flat head of relatively large area to bear downward against the top of the pallet and a shank dimensioned to pass through the pallet and into the hole in the foot, the lower end of said shank being slightly enlarged to lock the foot and fastener together after the fastener shank has passed downward through the pallet and into the foot.

2. A pallet foot assembly as defined in claim 1, in which the hole in the foot is a reentrant hole forming a reentrant tube extending downward inside the foot, and

the enlargement on the shank of the fastener comes below the lower end of the reentrant tube.

3. A pallet foot assembly as defined in claim 2, in which the foot and fastener are molded out of a plastics material.

4. A pallet foot assembly as defined in claim 3, in which the shank of the fastener is hollow and open at both ends.

5. A pallet foot assembly as defined in claim 3, in which the shank of the fastener is hollow and open at its upper end, and in which the lower end is closed and pointed downward and thereby made usable to penetrate a paper board pallet which does not have a previously made hole to receive the same.

6. A pallet foot assembly as defined in claim 3, in which the lower end of the foot has a peripheral flange to enlarge its bearing surface.

7. A pallet foot assembly as defined in claim 3, in which the foot tapers upward and the reentrant tube tapers downward.

8. A pallet comprising four pallet feet each as defined in claim 1, combined with a corrugated paper board having four holes receiving the shanks of the feet to secure the feet in position beneath the paper board.

9. A pallet foot assembly as defined in claim 2, in which the lower part of the enlargement on the shank is tapered downward, and the upper part of said enlargement is tapered upward.

References Cited by the Examiner

UNITED STATES PATENTS

1,783,873	12/1930	Duncan	248—188.9
1,805,252	5/1931	Miller	248—188.9 X
2,628,715	2/1953	Budd	108—51 X
2,741,361	4/1956	Klein	108—58 X
3,199,469	8/1965	Sullivan	108—58 X
3,233,564	2/1966	Sullivan	108—53

FOREIGN PATENTS

1,322,667	8/1963	France.

FRANK B. SHERRY, *Primary Examiner.*

GLENN O. FINCH, *Examiner.*