CONTROLLED INK-JET COPY-REPRODUCING APPARATUS

Filed Oct. 22, 1965 4 Sheets-Sheet 1

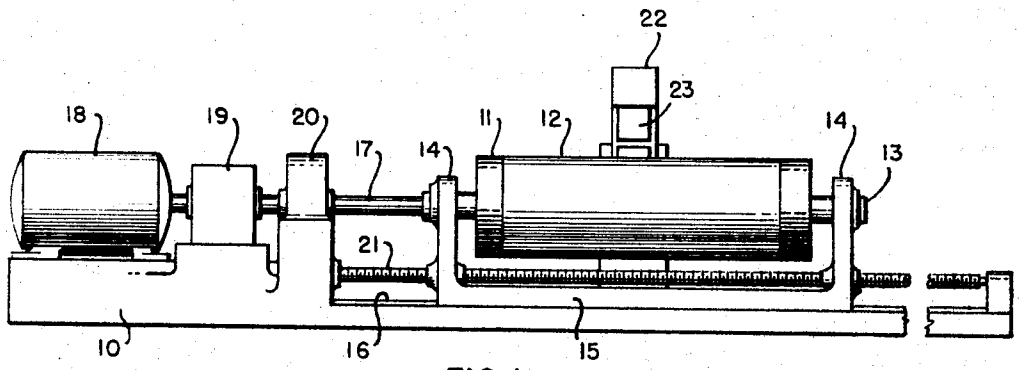

FIG. 1

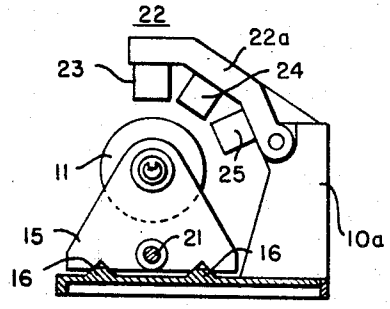

FIG. 2

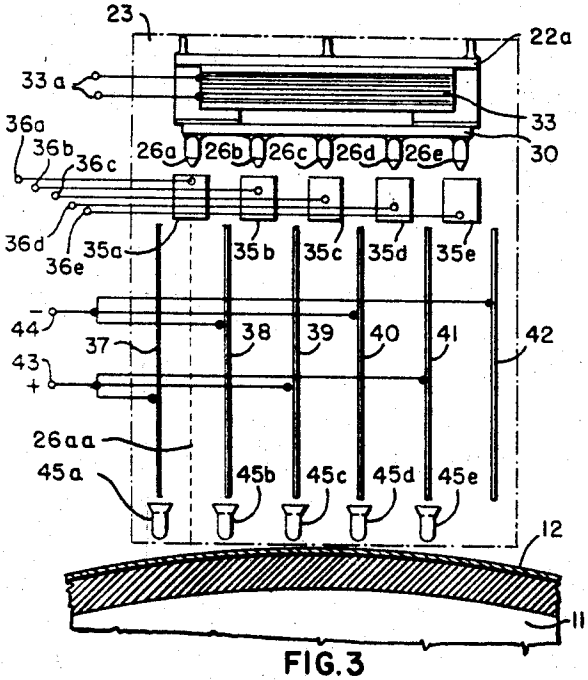

FIG. 3

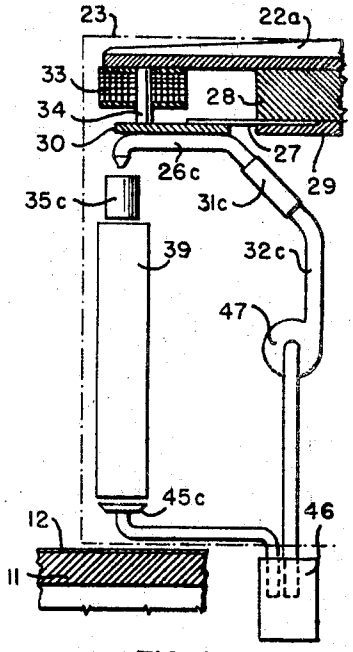

FIG. 4

CONTROLLED INK-JET COPY-REPRODUCING APPARATUS

Filed Oct. 22, 1965 4 Sheets-Sheet 3

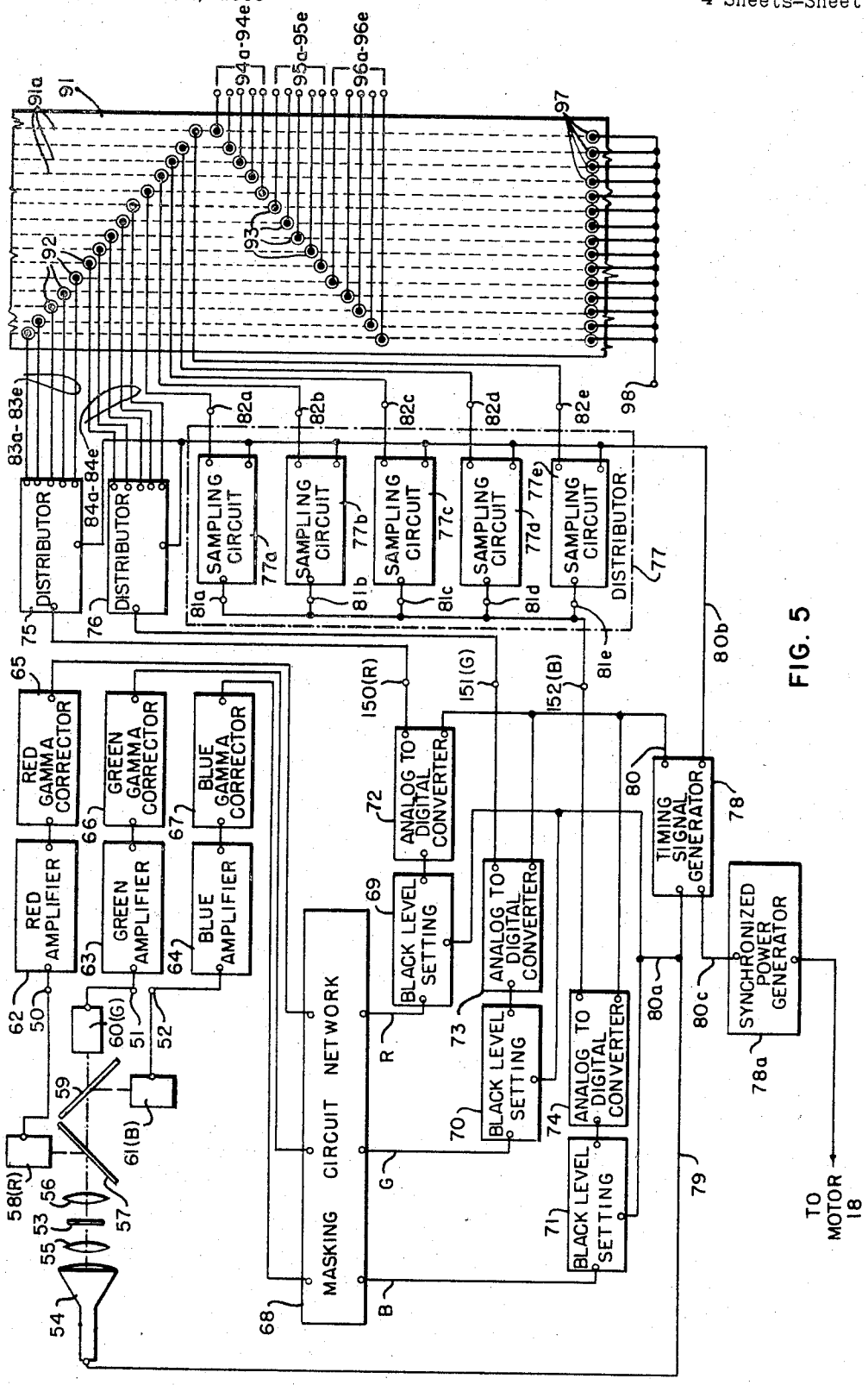

FIG. 5

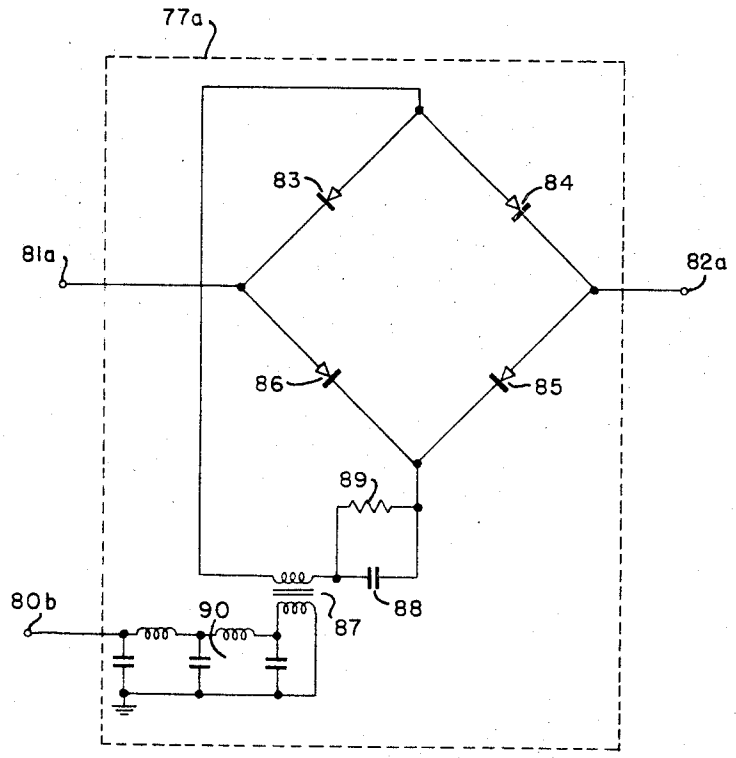

FIG. 6

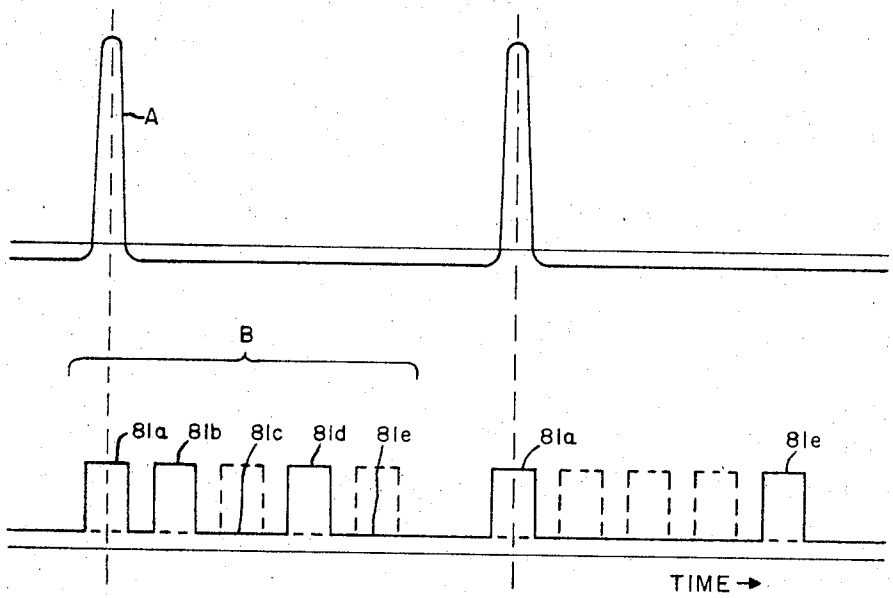

FIG. 7

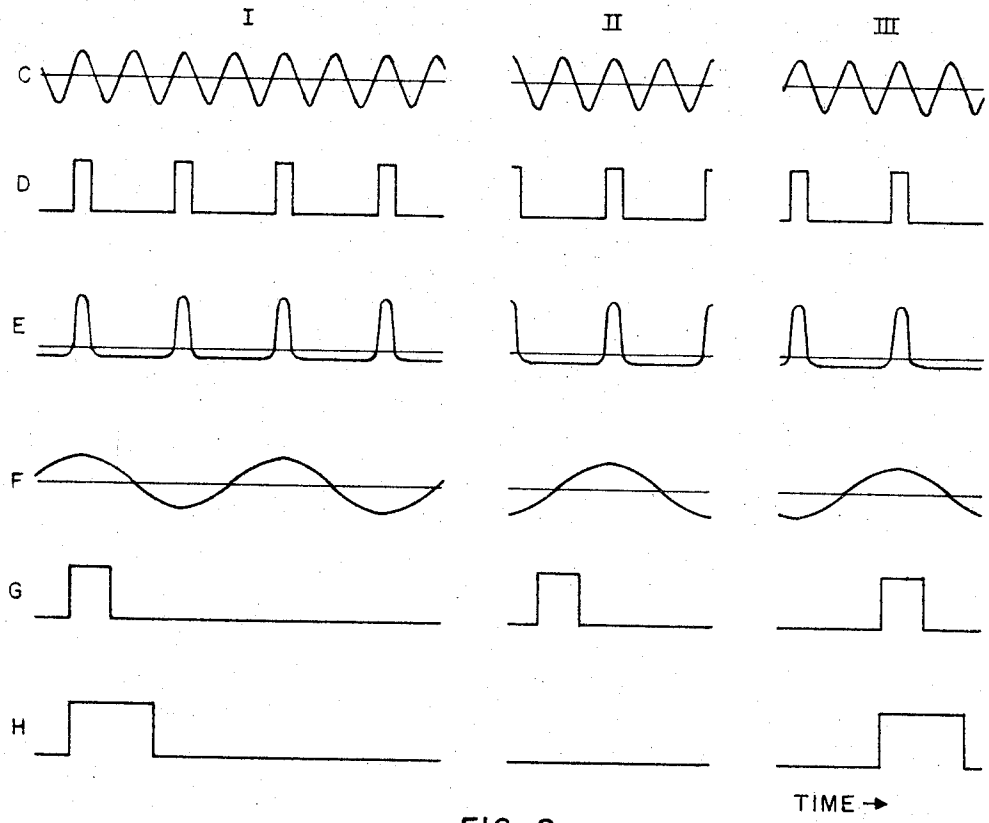

FIG. 8

United States Patent Office

3,404,221

Patented Oct. 1, 1968

1

3,404,221
CONTROLLED INK-JET COPY-REPRODUCING APPARATUS

Arthur V. Loughren, 22 Broadlawn Ave., Kings Point, N.Y. 11024

Filed Oct. 22, 1965, Ser. No. 500,947
16 Claims. (Cl. 178—5.2)

ABSTRACT OF THE DISCLOSURE

A controlled ink-jet aparatus for producing multi-color reproductions of a subject copy comprises a photoelectric scanner for developing video signals representative of the red, green, and blue components of the signal picked up by the scanner. The copy is reproduced on a record sheet disposed on a drum rotated in synchronism with the scanner. For each color component there is provided a set of ink jets disposed on a head which scans the record sheet. Each set comprises a plurality of ink jets or nozzles. The jets from these nozzles pass through individual electric charging cylinders which individually charge the ink droplets emerging from the jets and these droplets then traverse deflecting fields which direct the ink drops either to the record sheet or to the drain. By supplying inks of different optical densities to the several jets of each set and by selectively deflecting ink from predetermined jets to the drain, the optical density of each ink spot on the record can be controlled over a wide range of values to produce effectively a continuous tone color reproduction of the original copy.

This invention relates to controlled ink-jet copy-reproducing apparatus and, while it is of general application, it is particularly adapted for making color reproductions from a colored subject copy, for example, a color transparency or a positive or negative print. It is, however, applicable also to making monochrome reproductions.

Heretofore there have been marketed or proposed various apparatus for making multiple color prints from an original colored subject copy. Among these, the earliest and that in widest use, are multicolor printing presses using color-separation printing plates made by photographic processes. This method is attractive for very large volume printing such as magazines and newspapers, for which it represents a relatively low cost method, but the production of the color-separation printing plates is time-consuming and extremely costly, so that the cost of making a limited number of reproductions is excessive.

A second method of producing multiple color prints has been by regular photographic processes, generally using a laminated film or other photosensitive medium including a plurality of photosensitive dyes which are fixed to transmit light of different chromaticities. This method of making copy prints involves costly and time-consuming developing and printing processes and is subject to the further limitation that there are only a limited number of photosensitive dyes available and those do not ordinarily give the primary colors most desirable, for example saturated red, green, and blue colors, in the resulting prints. An additional and rather severe limitation of the color photographic process is that those dyes which lend themselves to being generated as the end products of the series of reactions initiated by photographic development are not, in general, the dyes which exhibit optimum stability in the presence of light, humidity, etc.

It is an object of the invention, therefore, to provide a new and improved controlled ink-jet copy-reproducing apparatus which obviates one or more of the above-mentioned limitations and disadvantages of prior apparatus and methods for reproducing multicolor subject copy.

2

It is another object of the invention to provide a new and improved controlled ink-jet copy-reproducing apparatus which has one or more of the following advantageous characteristics: relative simplicity and low cost; relatively extremely rapid reproduction of a limited number of copies; and virtually unlimited selection of colors for the reproducing medium.

In accordance with the invention, there is provided a controlled ink-jet apparatus for reproducing a subject copy on a record sheet comprising input means for supplying at least one video signal representative of the serial information content of a subject copy to be reproduced and including synchronizing information, a support for a record sheet, a head for scanning a record sheet on the record sheet support in synchronism with the input video signal, ink-jet means controllable over a range of values disposed on the scanning head for depositing ink on a record sheet on its support and including at least one ink-jet for developing a stream of discrete ink droplets, and means responsive to the input video signal for individually controlling the discrete ink droplets to control the optical density of the ink deposit on the record sheet over a range of values, thereby to produce an effectively continuous-tone reproduction of the subject copy. The term "effectively continuous-tone reproduction" is used herein and in the appended claims to refer to a reproduction which has a large number of tonal values between its extreme values, including half-tone reproduction, in contradistinction to two-tone reproduction in which each elemental area is reproduced in one or the other of the extreme tone values.

For a better understanding of the present invention, together with other and further objects thereof, reference is had to the following description, taken in connection with the accompanying drawings, while its scope will be pointed out in the appended claims.

Referring to the drawings:

FIG. 1 is an outline view in elevation showing the general physical layout of the several components of apparatus embodied in the invention;

FIG. 2 is an outline end view of the apparatus of FIG. 1;

FIG. 3 is a detailed side elevation of one of the ink-jet heads of the apparatus of FIGS. 1 and 2;

FIG. 4 is a detailed view of a single ink-jet of the type embodied in the apparatus of FIG. 3;

FIG. 5 is a schematic functional diagram of a complete controlled ink-jet copy-reproducing apparatus embodying the invention;

FIG. 6 is a schematic circuit diagram of the sampling circuit included in FIG. 5, while

FIGS. 7 and 8 represent the wave forms of the signals developed and applied to certain of the units of FIG. 5.

Referring now more particularly to FIGS. 1 and 2 of the drawings, there is represented a controlled ink-jet apparatus for reproducing a multicolor subject copy on a record sheet comprising a base or frame **10**, on which is mounted a rotatable support such as a drum **11** for a record sheet **12**, which may be of paper or other suitable material. The drum **11** is mounted on a shaft **13** journalled in upstanding arms **14**, **14** of a carriage **15** slidable on a pair of ways **16** similar to those widely used in machine tools. The shaft **13** is hollow and is actuated by a drive shaft **17** which extends into the hollow shaft **13** for a considerable distance and is splined thereto to permit driving of the shaft **13** while the carriage **15** travels along the ways **16**.

The drive shaft **17** is driven by a motor **18**, preferably a synchronous motor, which also drives a delay assembly **19**, described hereinafter, and a gear train **20**. The gear

train **20** drives a lead screw **21**, the gear ratio being such that, in one revolution of the shaft **17** and the drum **11**, the lead screw **21** will advance the carriage **15** by exactly the line-to-line displacement of the image reproduced on the record sheet **12**.

The motor **18** is supplied from a suitable power supply circuit, described hereinafter, of a frequency which produces an acceptable resolution along the length of a scanning line on the record sheet **12**. Associated with the drum **11** is a stationary head assembly **22** for scanning the record sheet **12** on the drum **11** in synchronism with a video signal or signals, as described hereinafter. This scanning head **22** includes a frame member **22*a*** which carries a plurality of ink-jet heads **23**, **24**, and **25**, described hereinafter, one for each color component, and is pivotally supported on a bracket **10*a*** upstanding from the frame **10** so that the ink-jet heads individually deposit inks of different colors on the record sheet **12**.

One of the ink-jet heads, for example the head **23**, is shown in detail in FIGS. 3 and 4. This head comprises five ink jets or nozzles **26*a*–26*e***, inclusive, the tips of which are directed to the record sheet **12** on the drum **11**. The frame **22*a*** carries a flexible hinge member **27** spaced therefrom by a spacer **28** and secured by a clamping plate **29**. The flexible hinge **27** is secured to a supporting plate or strip **30** on which the five ink jets or nozzles **26*a*–26*e***, inclusive, are mounted in any suitable fashion. Each of the ink jets, such as the ink jet **26*c*** of FIG. 4, is provided with a flexible section, such as the section **31*c***, which connects to a rigid ink supply pipe such as the pipe **32*c***. The ink-jet head assembly comprising the supporting plate **30** and the ink jets **26*a*–26*e***, inclusive, includes means for oscillating the ink jets to break up the ink discharged therefrom into discrete droplets. Specifically, the plate **30** is oscillated vertically at a high frequency, for example 10,000 to 100,000 c.p.s., by means of an exciting winding **33** energized from high-frequency supply terminals **33*a*** and cooperating with magnetostrictive armature element **34** secured to the supporting plate **30** and to frame **22*a***.

Individually associated with the ink jets **26*a*–26*e*** are a plurality of means for developing electric fields individual to and encompassing the trajectories of the ink jets to cause the same to deposit ink on the same spot of the record sheet **12** for each bit of signal information supplied thereto. This means may be in the form of a plurality of conductive charging cylinders **35*a*–35*e***, inclusive, through which the jets of ink from the nozzles **26*a*–26*e***, inclusive, pass. It is important that the cylinders **35*a*–35*e***, inclusive, enclose their respective ink jets at the points where the stream breaks up into droplets. The cylinders **35*a*–35*e***, inclusive, are individually and selectively excited with video signals from input terminals **36*a*–36*e***, inclusive, as described hereinafter.

Each of the ink-jet heads **23**, **24**, **25** also comprises a series of vertical deflection plates **37–42**, inclusive, disposed in parallel and capable of developing deflection fields individual to the jets of ink from the nozzles **26*a*–26*e***. The plates **37–42**, inclusive, are excited in pairs to produce electric deflection fields. For example, alternate plates **37**, **39**, and **41** are connected to the positive terminal **43** of undirectional supply circuit terminals **43**, **44** while the other plates **38**, **40**, and **42** are connected to the negative terminal **44**.

The arrangement of the ink nozzles **26*a*–26*e***, inclusive, the charging cylinders **35*a*–35*e***, inclusive, and the deflection plates **37–42**, inclusive, is such that normally, that is in the absence of video-signal components when no electric charge is imparted to the ink droplets as they pass through the cylinders **35*a*–35*e***, inclusive, the ink jets proceed directly to the record sheet **12**, as schematically represented by the jet **26*aa*** from the nozzle **26*a***. However, when an electric charge is impressed upon the ink jet by one of the cylinders **35*a*–35*e***, the jet is deflected to one of a series of drains **45*a*–45*e***, respectively, which are returned to an ink reservoir **46** by gravity, as shown, or by a pump, if required. As shown, the deflection fields between successive pairs of the plates **37–42** are of opposite polarities; in such an arrangement, the polarities of the charges induced on the ink droplets from the nozzles **26*a*–26*e***, inclusive, should also reverse polarity from nozzle to nozzle.

Ink is supplied to each of the nozzles **26*a*–26*e*** from an individual reservoir by an individual pump, such as reservoir **46** and pump **47**, providing a high-velocity jet, for example 20 to 200 inches per second. It will be understood that there is an ink supply and circulating system for each of the ink-jet nozzles of the heads **23**, **24**, and **25**.

Referring now to FIG. 5 of the drawings, there is shown schematically a complete electrical system for energizing the charging cylinders **35*a*–35*e***, inclusive, of the ink-jet heads **23**, **24**, and **25**. This apparatus includes an input circuit for supplying a plurality of video signals each representative of the serial information content of one color component of a subject copy to be reproduced and including synchronizing information. Specifically, the video signals representative of the red, green, and blue color components of the subject copy are supplied at terminals **50**, **51**, and **52**. These color component video signals may be supplied from any suitable source but there is shown, by way of example, an apparatus for deriving these signals from a color slide or transparency **53** and comprising a flying-spot scanner cathode-ray tube **54**, an objective lens **55**, and a condenser lens **56**. The optical system comprising the lenses **55**, **56** projects the illuminated spot on the face of the cathode-ray tube **54** onto a dichroic mirror system comprising a red-reflecting dichroic mirror **57**, which reflects light onto a red-sensitive photocell **58**, and a blue-reflecting dichroic mirror **59**, which reflects light onto a blue-sensitive photocell **61**; the green component of light passing through the dichroic mirrors **57**, **59** to a green-sensitive photocell **60**. The photocells **58**, **60**, and **61** are connected to red, green, and blue signals-translating channels including the amplifiers **62**, **63**, and **64**, respectively, and gamma corrector circuits **65**, **66**, and **67**, respectively, which, in turn, are connected to a masking circuit network shown generally at **68**.

The red, green, and blue output connections of the masking circuit network are connected to black level setting circuits **69**, **70**, and **71**, respectively, for stabilizing each of the signal outputs of the networks **68** on the black level of the signal. The elements **54–71**, inclusive, form no part of the present invention and may be conventional, for example as shown in the textbook McIlwain and Dean "Principles of Color Television," John Wiley & Sons, 1956, FIGURES 13–3, 13–16, and 13–17.

The black level setting units **69**, **70**, and **71** are connected to analog-to-digital converters **72**, **73**, and **74**, respectively. The converters **72**, **73**, and **74** comprise an electrical system for quantizing each of the red, green, and blue video signals into a plurality of components of discrete amplitude levels, specifically to five different binary amplitude levels, and developing coded trains of five pulses representative of such amplitudes. These converters likewise form no part of the present invention and may be constructed as described in an article by W. M. Goodall, "Telephony by Pulse Code Modulation," Bell System Technical Journal for July 1947, FIG. 4. The output terminals **150**, **151**, and **152** of the converters **72**, **73**, and **74**, respectively, are individually connected to distributors **75**, **76**, and **77**, each of which includes a sampling circuit for each of the pulse positions corresponding to the five amplitude levels of the signal input, as indicated by the sampling circuits **77*a*–77*e***, inclusive, of distributor **77**.

The electrical system further comprises a timing signal generator **78** which is connected to synchronize the operation of the flying-spot cathode-ray tube **54** via connection **79**, the analog-to-digital converters **72**, **73**, and **74** via connection **80**, the black level setting units **69**, **70**, and **71**

via a connection **80***a*, the various sampling circuits of the distributors **75**, **76**, and **77** via a connection **80***b*, and a power generator **78***a* for energizing the motor **18** via a connection **80***c*.

In FIG. 8 are shown the wave forms of the various signals developed by the timing signal generator **78** during three periods, period I being any given initial period, period II following period I by one line-scanning period, and period III following period I by one complete picture-scanning period. Curve C represents the wave form of the sine wave master timing signal from which all other timing signals are derived. Curve D represents a pulse signal of one-half the frequency of Curve C which is applied to the analog-to-digital converters **72**, **73**, **74** via connection **80**. Curve E represents a pulse-wave signal of the same frequency as Curve D which is applied to the sampling circuits of the distributors **75**, **76**, **77** via connection **80***b*. It also corresponds to curve A of FIG. 7. Curve F represents a sine-wave signal of one-half the frequency of the signals of Curves D and E and is connected to excite the driving windings **33** of all of the magnetostrictive actuators of the several nozzles. Since a drive of this type responds similarly to half cycles of both polarities, the nozzles are oscillated at the same frequency as the signals of Curves D and E. Curve G represents a line-synchronizing pulse for synchronizing the flying-spot scanner **54** in the line direction via connection **79** and also serves as a control pulse for the black level setting circuits **69**, **70**, and **71**. The signal represented by Curve G is shown in an "interlaced" relation to the signal of wave form D to produce the relationship in which the dots in one reproduced picture line are offset from the dots in adjacent lines. Wave form H represents the synchronizing pulse for controlling the picture frequency scanning of the flying-spot scanner **54**. It is shown in noninterlaced relation with respect to the line pulses since each picture is entirely independent of preceding and following pictures so that no gain in performance is obtained by such interlacing.

Each of the sampling circuits may be of any type well known in the art but there is shown in FIG. 6, by way of example, one sampling circuit suitable for use in the distributors **75**, **76**, and **77**. Assuming that the circuit of FIG. 6 represents the sampling circuit **77***a* having an input terminal **81***a* and an output terminal **82***a*, this sampling circuit includes a diode switch comprising four diodes **83**, **84**, **85**, and **86** connected in a conventional square. One diagonal of the square is connected between input terminal **81***a* and output terminal **82***a*. The conjugate diagonal is connected to the secondary winding of a pulse transformer **87** in series with a capacitor **88** which, in turn, is shunted by a resistor **89**. The primary winding of transformer **87** is connected via a delay network **90** to the output connection **80***b* of the timing signal generator **78**.

In the operation of the sampling circuit of FIG. 6, a pulse waveform, represented by waveform A of FIG. 7, is applied from timing generator **78** via connection **80***b*, the delay network **90** and the transformer **87** to the diode switch. Simultaneously, a quantized and encoded video signal represented by waveform B of FIG. 7 is applied to the diode switch via the input terminal **81***a* from the analog-to-digital converter **74**. Waveform B shows a typical signal which may appear on terminal **152** of FIG. 5 and thus be applied simultaneously to input terminals **81***a*–**81***e* of sampling circuits **77***a*–**77***e*. In waveform B, the several pulse positions are identified with numerals representing the intended destination for use of these pulses. Thus the pulse labeled **81***a* is intended for use by sampling circuit **77***a* at its terminal **81***a*; pulse **81***b* is similarly intended for use by sampling circuit **77***b*, etc. Nevertheless, each of these pulses is applied simultaneously to all five of the sampling circuits. In waveform B, the dotted lines indicate the fact that each of the pulses may be present or absent, depending on the amplitude of the particular picture element from which the pulse group has been derived. Waveform A is shown in FIG. 7 with its pulse approximately centered in time upon the pulse **81***a* of waveform B. If waveform A were to represent the input to sampling circuit **77***b* via its input terminal **81***b*, the pulse of waveform A would coincide approximately in time with the center of the pulse **81***b* of waveform B. The arrangement is such that the diode switch **83**–**86** is rendered conductive by a pulse of Curve A only during the time interval in which a quantized video signal, as represented by pulse **81***a* of waveform B, may be available at input terminal **81***a*. During the remaining portion of the cycle of the timing signal generator **78**, the diode switch interrupts the connection from the input terminal **81***a* to the output terminal **82***a* of the sampling circuit **77**.

Each of the several sampling circuits of the distributors **75**, **76**, and **77** has an individually selected delay circuit, such as the circuit **90**, with circuit constants such that, for example, the sampling circuit **77***a* will sample during the time period allotted to the first pulse of the quantized video signal, the sampling circuit **77***b* to the time interval allotted to the second pulse of the quantized video signal, etc. Thus each distributor responds to the series of five pulses of the quantized video signal from its respective analog-to-digital converter and places an output voltage pulse, corresponding to the presence or absence of a particular pulse of the quantized video signal, on each of the distributor's five output terminals.

The controlled ink-jet copy-reproducing apparatus of the invention further comprises means responsive to the video signals such as the red, green, and blue signals at the terminals **50**, **51**, **52** but, more specifically, to the quantized and sampled signals appearing on terminals **83***a*–**83***e* of distributor **75**, the output terminals **84***a*–**84***e* of the distributor **76**, and the output terminals **82***a*–**82***e* of the distributor **77** for controlling the ink-jet means to control the optical density of the ink deposits on the record sheet.

The optical density of each elemental area of the reproduced copy may be controlled by controlling the quantity of ink discharged from a single controllable jet, or by controlling a plurality of jets having different ink-discharge characteristics, e.g. by the selection of one or more of a plurality of ink-jet nozzles having different rates of ink discharge, or, as described herein, by the selection of one or more of a plurality of ink-jet nozzles discharging inks of different dye concentrations or opacities.

It will be noted that in the construction represented in FIGS. 3 and 4, the ink-jet means of each of the heads **23**, **24**, and **25** comprises a plurality of controllable ink jets or nozzles which are displaced in the direction of scanning by equal increments and, as stated above, the electric fields developed by the charging cylinders **35***a*–**35***e* and the deflection plates **37**–**42** are such that the ink jets are normally directed so as to deposit ink on the record sheet. The ink jets or nozzles of each head, such as the nozzles **26***a*–**26***e* of head **23**, are individually supplied with inks of the same color but of different concentrations or opacities. For example, their opacities may be in the ratio 1:2:4:8:16, making possible thirty-one tonal gradations for each elemental area or spot of the copy reproduction.

As described hereinafter, the fifteen controllable ink jets of the heads **23**, **24**, and **25** are individually controlled by the quantized signals appearing on the terminals **83***a*–**83***e*, **84***a*–**84***e*, and **82***a*–**82***e*. Because of the incremental displacements of the ink jets in the direction of scanning of the record sheet **12**, as described, it becomes necessary to provide means for progressively delaying the quantized signal components delivered by the groups of terminals **83***a*–**83***e*, **84***a*–**84***e*, and **82***a*–**82***e*. To this end, there is provided a delay or storage means **19** (FIG. 1) which may be in the form of a magnetic storage drum **91**, shown in the form of a planar development of its periphery for convenience. The drum **91** has a plurality of storage tracks **91***a* equal in number to the total number of quantized video-signal components, in this case fifteen. Individually asso-

ciated with the tracks **91***a* are an equal number of recording heads **92** individually connected to the groups of distribtuor terminals **83***a*–**83***e*, **84***a*–**84***e*, and **82***a*–**82***e*.

The drum **91** is also provided with a corresponding number of readout heads **93** individually associated with the tracks **91***a*, the readout heads being connected to groups of output terminals **94***a*–**94***e*, **95***a*–**95***e*, and **96***a*–**96***e*. These three groups of terminals are connected to the fifteen charging cylinders of the ink-jet heads **23**, **24**, and **25**, such as to charging cylinders **35***a*–**35***e* of FIG. 3, for individually controlling the ink jets in response to the delayed quantized signal components. If desired, conventional amplifiers may be included in the connections described and appropriate ones of the connections will be made with reversed polarity to take into account the opposite polarities of the fields between successive pairs of deflection plates **37**–**42**, as described above. The design of the system is such that the incremental delays of the signal components effected by the sampling circuits of the distributors **75**, **76**, **77** are substantially equal to the incremental scanning time differences of their respective ink jets due to their respective displacements about the periphery of the drum **11**.

Coming now to the operation of the controlled ink-jet copy-reproducing apparatus embodying the invention and referring to FIGS. 1 and 2, a record sheet **12**, on which a multicolor print is to be formed, is mounted on the drum **11**. The motor **18** is energized, rotating the drum **11** and concurrently, via the lead screw **21**, actuating the carriage **15** carrying the drum **11** axially past the scanning head **22** carrying the ink-jet means. The speed of rotation of the motor **18** is controlled via the timing signal generator **78** and power generator **78***a* (FIG. 5) so that the drum **11** rotates in timed relation with the scanning of the subject copy, that is the transparency **53**, by the flying-spot scanner **54**.

Turning now to FIG. 5, the flying-spot scanner and its associated circuitry consisting of elements **54**–**71**, inclusive, operate in the manner described in aforesaid McIlwain and Dean reference to generate red, green, and blue video-signal components representing the image on the slide **53**. These red, green, and blue video-signal components are amplified and their gamma corrected to compensate for departures from unity gamma in the flying-spot scanner, the signal-translating channels, and the reflectances of the inks as deposited on the record sheet **12**, etc. The gamma of the signal components may be adjusted also to get desired artistic effects. The units **69**, **70**, and **71** are effective to stabilize the red, green, and blue video-signal components, respectively, on the black level, that is, on the level corresponding to an absence in the subject copy of any luminance of red, green, or blue chromaticity.

The analog-to-digital converters **72**, **73**, **74** operate as described in the aforesaid Goodall article. The output of each of the converters **72**, **73**, **74** consists of a series of five pulse positions in each of which a pulse will be present or absent, depending upon the amplitude of the input signal at the time of sampling. The five pulses (if present) occur in a regular time sequence and are applied to the distributors **75**, **76**, and **77**, respectively. As stated above, each of these distributors includes five sampling circuits which are keyed or gated by the signal represented by Curve E of FIG. 8 from timing signal generator **78** to translate a signal only at the pulse position corresponding to its respective quantized signal.

As a result, there are potentially developed fifteen quantized video signals, five each representing the red, green, or blue video-signal component, and these quantized video signals are individually impressed upon the record heads **92** of the magnetic storage means on which they are recorded as a series of pulses of amplitudes representative of the sampled video components. In normal operation, the drum **91** rotates in timed relation, specifically in synchronism, with the record sheet **12** on the drum **11**. Pulses recorded on the drum by the heads **92** are subsequently read out by the heads **93** and applied to the charging cylinders associated with the ink-jet heads **23**, **24**, **25** such as the charging cylinders **35***a*–**35***e*, inclusive. As stated above, in the absence of a video signal on a charging cylinder, the disposition of parts is such that the ink jet from the associated nozzle is directed onto the record sheet **12**. When a charging cylinder receives a video-signal component, the ink droplets passing therethrough receive an electric charge so that, in passing through the deflecting field developed by a pair of the deflection plates **37**–**42**, inclusive, they are deflected into one of the drains such as the drains **45***a*–**45***e*, inclusive. Obviously, the converse of this arrangement might be used.

The peripheral displacement between the record heads **92** and their respective readout heads **93** is progressively increased from track-to-track along the drum **91**, the incremental delay between successive associated heads being equal to the incremental time intervals between the scanning of any given spot on a record sheet **12** by the several ink jets of the heads **23**, **24**, **25**. Thus, the circuit means described is effective individually and selectively to excite the electric field charging cylinders **35***a*–**35***e*, inclusive, in response to the delayed signal components from the drum **91** to direct and deposit ink droplets from their associated ink jets onto the record sheet or away from the record sheet into the drains, such as the drains **45***a*–**45***e*, inclusive.

Assuming that the amplitudes of the quantized signal outputs of the converters **72**, **73**, **74** are in the ratio 1:2:4:8:16, the inks supplied to the jets of each of the several heads **23**, **24**, **25** are given such concentrations that the opacities of the inks discharged from the several jets are in the same ratio. Consequently, on each spot of the record sheet will be deposited a plurality of minute droplets of red, green, and blue inks representative of thirty-one tonal gradations of the red, green, and blue components of each elemental area of the slide **53** being scanned.

The controlled ink-jet copy-reproducing apparatus described above avoids the time-consuming and costly process of fabricating color-separation printing plates required for conventional multicolor printing and also avoids the costly and time-consuming developing and printing processes required for multicolor photographic reproduction. Furthermore, the reproduction copies may be formed on ordinary inexpensive paper rather than on expensive multicolor photographic print paper.

While there has been described what is, at present, considered to be the preferred embodiment of the invention, it will be obvious to those skilled in the art that various changes and modifications may be made therein, without departing from the invention, and it is, therefore, aimed in the appended claims to cover all such changes and modifications as fall within the true spirit and scope of the invention.

What is claimed is:

1. A controlled ink-jet apparatus for reproducing a subject copy on a record sheet comprising:

input means for supplying at least one video signal representative of the serial information content of a subject copy to be reproduced and including synchronizing information;

a support for a record sheet;

a head for scanning a record sheet on said support in synchronism with said video signal;

ink-jet means controllable over a range of values disposed on said scanning head for depositing ink on a record sheet on said support and including at least one ink jet for developing a stream of discrete ink droplets;

and means responsive to said video signal for individually controlling said ink droplets to control the ink deposits on the record sheet over a range of values,

thereby to produce an effectively continuous-tone reproduction of the subject copy.

2. A controlled ink-jet apparatus for reproducing a subject copy on a record sheet in accordance with claim 1 in which said ink-jet means includes means for selectively and individually electrically charging said ink droplets upon their breakup from the ink jet.

3. A controlled ink-jet apparatus for reproducing a subject copy on a record sheet in accordance with claim 1 in which said ink-jet means includes a fluid passage from which emerges a stream of discrete ink droplets and means for selectively and individually electrically charging said ink droplets after emergence from said fluid passage.

4. A controlled ink-jet apparatus for reproducing a subject copy on a record sheet in accordance with claim 1 in which said ink-jet means includes an ink jet from which emerges a continuous ink stream which subsequently breaks up into discrete ink droplets and means for periodically acting upon said ink jet to regulate the breakup of said ink stream into discrete ink droplets.

5. A controlled ink-jet apparatus for reproducing a subject copy on a record sheet comprising:

input means for supplying at least one video signal representative of the serial information content of a subject copy to be reproduced and including synchronizing information;

a support for a record sheet;

a head for scanning a record sheet on said support in synchronism with said video signal;

ink-jet means controllable over a range of values disposed on said scanning head for depositing ink on a record sheet on said support and including at least one ink jet for developing a stream of discrete ink droplets;

and means responding to said video signal for individually controlling said ink droplets to control the optical density of the ink deposits on the record sheet over a range of values, thereby to produce an effectively continuous-tone reproduction of the subject copy.

6. A controlled ink-jet apparatus for reproducing a subject copy on a record sheet comprising:

scanning means for developing at least one video signal representative of the information content of a subject copy to be reproduced;

a support for a record sheet;

a head for scanning a record sheet on said support in synchronism with the scanning of the subject copy;

ink-jet means controllable over a range of values disposed on said scanning head for depositing ink on a record sheet on said support and including at least one ink jet for developing a stream of discrete ink droplets;

and means responsive to said video signal for individually controlling said ink droplets to control the optical density of the ink deposits on the record sheet over a range of values, thereby to produce an effectively continuous-tone reproduction of the subject copy.

7. A controlled ink-jet apparatus for reproducing a subject copy on a record sheet comprising:

input means for supplying at least one video signal representative of the serial information content of a subject copy to be reproduced and including synchronizing information;

a rotatable support for a record sheet;

a stationary head for scanning a record sheet on said support in synchronism with said video signal;

ink-jet means controllable over a range of values disposed on said scanning head for depositing ink on a record sheet on said support and including at least one ink jet for developing a stream of discrete ink droplets;

and means responsive to said video signal for individually controlling said ink droplets to control the optical density of the ink deposits on the record sheet over a range of values, thereby to produce an effectively continuous-tone reproduction of the subject copy.

8. A controlled ink-jet apparatus for reproducing a multicolor subject copy on a record sheet comprising:

input means for supplying a plurality of video signals, each representative of the serial information content of one color component of a subject copy to be reproduced and including synchronizing information;

a support for a record sheet;

a head for scanning a record sheet on said support in synchronism with said video signal;

a plurality of ink-jet means controllable over a range of values disposed on said scanning head for individually depositing inks of different colors on a record sheet on said support, each of said ink-jet means including at least one ink jet for developing a stream of discrete ink droplets;

and means responsive to said video signals for individually controlling said ink droplets to control the optical density of the ink deposits on the record sheet over a range of values, thereby to produce an effectively continuous-tone reproduction of the subject copy.

9. A controlled ink-jet apparatus for reproducing a subject copy on a record sheet in accordance with claim 5 in which the plurality of ink-jet means are spaced in the direction of scanning of a record sheet and which includes means for imparting delays to certain of said video signals, whereby inks of different colors deposited on any given spot of the record sheet correspond to the same instant of time of the corresponding video signals.

10. A controlled ink-jet apparatus for reproducing a subject copy on a record sheet comprising:

input means for supplying at least one video signal representative of the serial information content of a subject copy to be reproduced and including synchronizing information;

a support for a record sheet;

a head for scanning a record sheet on said support in synchronism with said video signal;

a plurality of controllable ink jets disposed on said scanning head and having different predetermined ink-discharge characteristics;

an electrical system for quantizing said video signal into a plurality of components of discrete amplitude levels;

and circuit means for individually controlling said ink jets in response to said signal components.

11. A controlled ink-jet apparatus for reproducing a subject copy on a record sheet comprising:

input means for supplying at least one video signal representative of the serial information content of a subject copy to be reproduced and including synchronizing information;

a support for a record sheet;

a head for scanning a record sheet on said support in synchronism with said video signal;

a plurality of controllable ink jets disposed on said scanning head to deposit ink on the same spot of said record sheet in response to video information representative of an elemenal area of the subject copy and having different predetermined ink-discharge characteristics;

an electrical system for quantizing said video signal into a plurality of components of discrete amplitude levels;

and circuit means for individually controlling said ink jets in response to said signal components.

12. A controlled ink-jet apparatus for reproducing a subject copy on a record sheet comprising:

input means for supplying at least one video signal representative of the serial information content of a subject copy to be reproduced and including synchronizing information;

a support for a record sheet;
a head for scanning a record sheet on said support in synchronism with said video signal;
a plurality of ink jets disposed on said scanning head normally directed so as to deposit ink on said record sheet and having different predetermined ink-discharge characteristics;
a plurality of means for developing electric fields individual to and encompassing the trajectories of said ink jets;
an electrical system for quantizing said video signal into a plurality of components of discrete amplitude levels;
and circuit means for individually and selectively exciting said electric field means in response to said signal components to deposit ink from their associated jets onto the record sheet.

13. A controlled ink-jet apparatus for reproducing a subject copy on a record sheet comprising:
input means for supplying at least one video signal representative of the serial information content of a subject copy to be reproduced and including synchronizing information;
a support for a record sheet;
a head for scanning a record sheet on said support in synchronism with said video signal;
a plurality of controllable ink jets disposed on said scanning head displaced in the direction of scanning and having different predetermined ink-discharge characteristics;
an electrical system for quantizing said video signal into a plurality of components of discrete amplitude levels;
means for progressively delaying said quantized signal components;
and circuit means for individually controlling said ink jets in response to said delayed signal components;
said delays of said signal components substantially equalling the scanning time differences of their respective ink jets.

14. A controlled ink-jet apparatus for reproducing a subject copy on a record sheet comprising:
input means for supplying at least one video signal representative of the serial information content of a subject copy to be reproduced and including synchronizing information;
a support for a record sheet;
a head for scanning a record sheet on said support in synchronism with said video signal;
a plurality of controllable ink jets disposed on said scanning head displaced by equal increments in the direction of scanning and having different predetermined ink-discharge characteristics;
an electrical system for quantizing said video signal into a plurality of components of discrete amplitude levels;
means for progressively delaying said quantized signal components;
and circuit means for individually controlling said ink jets in response to said delayed signal components, said incremental delays of said signal components substantially equalling the incremental scanning time differences of their respective ink jets.

15. A controlled ink-jet apparaus for reproducing a subject copy on a record sheet comprising:
input means for supplying at least one video signal representative of the serial information content of a subject copy to be reproduced and including synchronizing information;
a support for a record sheet;
a head for scanning a record sheet on said support in synchronism with said video signal;
a plurality of ink jets disposed on said scanning head and having different predetermined ink-discharge characteristics;
means for oscillating said ink jets to break up the ink discharged therefrom into discrete droplets;
a plurality of means for developing electric fields individual to and encompassing the trajectories of said droplets;
an electrical system for quantizing said video signal into a plurality of components of discrete amplitude levels;
and circuit means for individually and selectively exciting said electric field means in response to said signal components to direct said ink droplets to or away from the record sheet.

16. A controlled ink-jet apparatus for reproducing a multicolor subject copy on a record sheet comprising:
scanning means for developing a plurality of video signals each representative of the information content of one color component of a subject copy to be reproduced;
a support for a record sheet;
a plurality of heads, one for each color component, for scanning a record sheet on said support in synchronism with the scanning of the subject copy;
a plurality of controllable ink jets disposed on each of said scanning heads and having different predetermined ink-discharge characteristics;
an electrical system for quantizing each of said video signals into a plurality of components of discrete amplitude levels;
and circuit means for individually controlling said ink jets on each of said heads in response to the corresponding quantized signal components of one of said video signals.

References Cited

UNITED STATES PATENTS

1,817,098	8/1931	Ranger et al.	178—5.2
2,951,894	9/1960	Hirsch.	

OTHER REFERENCES

Sweet, R. G.: "High Frequency Recording with Electrostatically Deflected Ink Jets," The Review of Scientific Instruments, vol. 36, No. 2, February 1965, pp. 131–136.

R. MURRAY, *Assistant Examiner.*

ROBERT L. GRIFFIN, *Primary Examiner.*