June 23, 1959

K. LEHOVEC

2,892,094

LIGHT DIMMING DEVICE

Filed Jan. 3, 1955

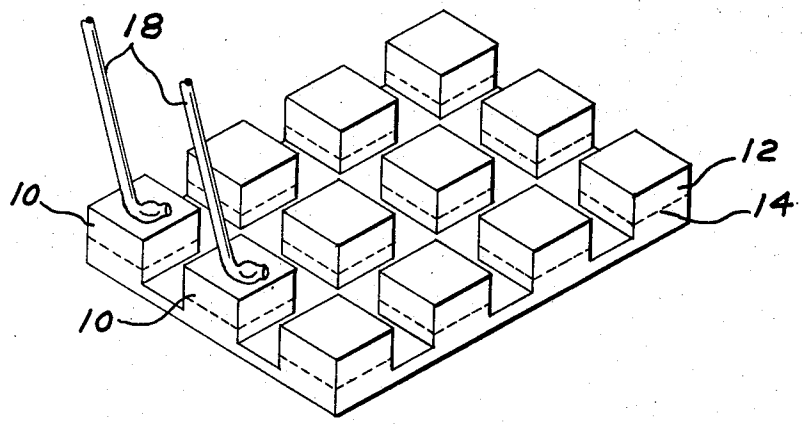

FIG. 1

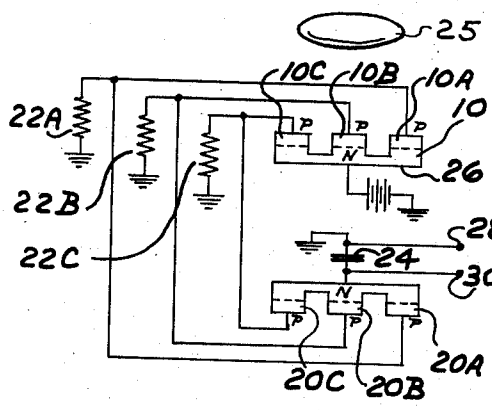

FIG. 3

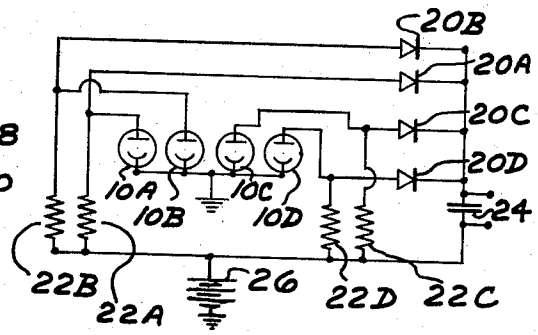

FIG. 2

INVENTOR.
KURT LEHOVEC
BY
Roland A. Dexter

United States Patent Office 2,892,094 Patented June 23, 1959

2,892,094

LIGHT DIMMING DEVICE

Kurt Lehovec, Williamstown, Mass., assignor to Sprague Electric Company, North Adams, Mass., a corporation of Massachusetts

Application January 3, 1955, Serial No. 479,450

3 Claims. (Cl. 250—211)

This invention relates to a signal translating device and more particularly to a device which utilizes junction semiconductor crystals for unusual sensitivity to point sources of light positioned within a background of substantial light level.

Although there is substantial need for a device which can view a field of considerable light level and distinguish the presence or absence of a point source of a substantial intensity, the problem is particularly acute for headlight control systems of automobiles. Present automobiles are provided with devices which function in such a manner as to dim the lights when two vehicles are approaching each other after dark, but they are susceptible to spurious triggering by lighted objects, such as signs along the roadway. To palliate this deficiency the sensitivity of such actuating means is normally reduced to level such that actuation of the dimmer control does not occur until the two vehicles have come to such close relationship that a safety factor is involved. Such a headlight control is set forth in the Gillespie United States Letters Patent 2,240,843. As indicated above, the primary problem in the construction of a light dimming device, particularly for use of cars, is the fact that the total amount of stray light from the background may be of the same order or larger than the amount of light coming from the point target which should operate the light dimming device. One method has been suggested for eliminating this difficulty, and that is by scanning the area in the front of the car so that at any given time only a portion of the area ahead is projected onto the input photocell or photosensitive element of the light dimming apparatus. This particular scanning is done by mechanical means which is inherently disadvantageous, particularly because of cost of construction, complexity of operation, susceptibility to failure, and the given time lag which must exist during the scanning cycle.

It is therefore an object of this invention to overcome the foregoing and related disadvantages of the prior art. It is a further object of this invention to produce a signal translating device, electronic in nature, which can distinguish a point source of light of considerable intensity over background lighting of moderate intensity. A still further object of this invention is to produce an electronic means for light dimming apparatus for use with automobiles. Still further objects of this invention will be apparent from the following specification and the appended drawings.

These objects have been achieved in accordance with this invention in its broadest concept by the production of a signal translating device which comprises an array of photosensitive elements onto which a picture is projected; and an electrical means for the evaluation of a photo response of these photosensitive elements, whereby the means separates the response of the element which received the highest intensity.

In a more restricted sense, these objects have been achieved in accordance with this invention by the production of a signal translating device comprising a plurality of photosensitive elements, each consisting essentially of a photosensitive diode, a blocking diode, and a resistance element, said photosensitive elements biased in the non-conducting state by potential means, and an output capacitor connected circuitwise to said potential means and said photosensitive elements so as to receive a charging current when one of said photosensitive elements is activated by light.

This invention is featured by the production of a plurality of point photocells by machining a slab of semiconducting material having a p-n junction with a plurality of horizontal and vertical cuts, each cut of which traverses the junction layer.

In the drawings:

Fig. 1 pictures the photosensitive element produced in accordance with this invention;

Fig. 2 shows a circuit of the invention; and

Fig. 3 shows the circuit of the preferred apparatus produced in accordance with this invention.

Whereas the prior art has used a single photocell for the signal translating device, and in part avoided its disadvantages (although introducing further disadvantages) by mechanical scanning, this invention resolves the difficulties of the prior art by a purely electronic device using a plurality of point photocells or photosensitive elements. The sensitivity of the device of the invention is a direct function of the number of photosensitive elements present in the mosaic onto which the scanned picture is projected. In its simplest form my device can be viewed as a large number of photosensitive elements closely grouped together into a mosaic onto which a picture is projected by means of a lens. Within this projected picture is the target which actuates the operating means, which target will have a much higher light density than an element of equal size in the background. The area of the mosaic which is subjected to the target intensity will have a higher output than any of the surrounding photosensitive elements. As is the usual case with the present systems, the sums of the outputs of the other photosensitive elements will, or may be, larger than the output of the individual photocell onto which the target is projected. However, in this invention the individual outputs are monitored and only when the photo response reaches a predetermined value as a result of target photo incidence will the actuating mechanisms operate.

Before considering in detail the mechanics of the apparatus of which the photosensitive array is a necessary part, for better understanding reference should be made to Fig. 1 which diagrammatically portrays the aforementioned photosensitive array. The photosensitive array in this particular drawing consists of 12 photosensitive elements produced on a rectangular slab 12 of a semiconducting material having a p-n junction 14 present. This semiconductive slab 12 can be produced by a number of methods of which a typical one is to grow the crystal from a substantially pure semiconductor melt at a very slow constant rate of growth. This growth is usually less than 1" per hour and the operator successively adds to the melt small traces of donor and acceptor activators, thereby converting the growing ingot from one type semiconductor to the other. For example, a germanium monocrystalline ingot is grown from a semiconductor melt consisting of 100 grams of substantially pure germanium initially having a resistivity of about 20 ohm-centimeters and to which 10 micrograms of pure gallium have been added in order to produce p-type conductivity in the growing ingot. After a portion of the ingot has been grown, one milligram of pure antimony is added to the melt to convert the growing p-type germanium to n-type germanium. The amount of donor and acceptor activator traces included is, of course, so small that the resistivity of the resulting germanium ingot

remains considerably above one ohm-centimeter. The photosensitive slab obtained by slicing of the above grown ingot can have a thickness of about 0.25 inch and dimensions of 0.5 inch by 0.5 inch. The p-n junction is approximately ½ the distance through the thickness of the crystal, that is, approximately ⅛" from either surface. The grooves, both lateral and vertical, are conveniently prepared in the crystalline slab, with an ultrasonic vibrating tool having the appropriate pattern present on the surface of the cutting tool. This technique is fully set forth in the Balmuth United States Patent No. 2,580,716, as well as in United States Patent Nos. 2,632,858, 2,636,-998 and 2,651,148. The preferred manner in which to cut the grooves is such that they have not perpendicular sides, but sides which are slightly concave with respect to the surface onto which the light will be incident. The reason for this is that it is desirable to expose a substantial portion of the junction region **14** of each photosensitive element to the incident light projected onto the semiconductor mosaic. Attached to the upper surface of the photosensitive elements **10** is a lead wire which is joined to the respective photosensitive element in a non-rectifying manner. The lead wires, only two of which are shown, are indicated by the numeral **18**.

The method set forth above for producing the junction crystal is by crystal growing, however there exists many other processes by which a rectangular crystalline slab of a semiconductor of either germanium or silicon can be produced having a photosensitive junction. Included is the diffusion of an impurity through the surface into the body of the semiconductor slab, surface melting of one of the two surfaces of the semiconductor slab adding impurities to the melt for purposes of producing a junction, plating on a rectifying layer of metal such as zinc, onto n-type germanium, which plating may be accomplished with masking so as to produce the multiplicity or plurality of photosensitive elements without requiring the cutting operation, welding or soldering on conductor wires which either are of such composition as to create a junction area in the vicinity of the contact or are of a carrier metal which contains impurities such as gold containing gallium or indium so as to produce a junction area in the region of the lead-in wire. The latter methods have much merit in that they make possible the attainment of a plurality of photosensitive elements without the cutting operation, however they do suffer from the disadvantage that the magnitude of blocking potential which may be imposed across the junction is of less magnitude than that with the grown crystal containing the junction. As an alternative to the above described concave cuts the cutting die could be such as to produce an offset at the region of junction **14**.

Now that it is apparent how the photosensitive array is produced, reference should be made to Fig. 2 which shows the schematic for the signal translating device of the invention. In this circuit, the output voltage is a function of the maximum output of any single photosensitive element and not sensitive to the total output of the photosensitive mosaic. The photosensitive elements **10** are each part of an individual photosensitive circuit which has additionally a diode and a load resistor, which diodes are designated by **20** and the load resistors by **22**. The individual diodes indicated as **20A**, **20B**, **20C** and **20D** permit the current to flow through the respective load resistors **22A**, **22B**, **22C**, or **22D** and to charge the capacitor **24**, but do not permit discharge of the capacitor **24** through the particular resistor. Assume now for illustration purposes that the target light is directed upon photosensitive element **10C**. When this occurs conduction results across **10C** which, during the time of light incidence, serves as a resistance element of much lowered magnitude in series with the resistance load resistor **22C** and power supply **26**. With such current flow capacitor **24** is charged to a potential depending upon the amount of the supply potential **26** developed across resistor **22C**.

The condenser cannot discharge through the diodes **20B** and **20A**, since these diodes block the discharge current from the condenser. The output voltage from capacitor **24** can then be taken off and either amplified or in some manner operate an actuating element so as to trigger the desired operation, once the voltage developed across the capacitor **24** reaches the desired magnitude.

The photosensitive array preferably produced from a semiconductor crystal having a p-n junction present can also be produced from a plurality of photoelectric elements, e.g. photoelectric cells concentrated into photoresponsive mosaic onto which the picture is projected. The preferred semiconductor array makes possible the use of substantial blocking voltages, hence excellent output sensitivity and target area sensitivity through concentration of 100 to 1000 photosensitive elements in an area of quite restricted dimension result. (That is an area of less than one square inch.) To observe this invention in truly its broadest scope, one should take Fig. 2 and delete therefrom the various load resistors, diodes, and capacitor **24** and replace them only with an impedance or electrical means sensitive to the maximum output from an individual photosensitive element.

In Fig. 3 there has been set forth a pictorial, as well as schematic, arrangement illustrative of the preferred embodiment of the invention. The elements **10** of Fig. 2 have been replaced by a limited number of photosensitive elements produced from a slab of semiconductor material having a p-n junction and ultrasonically grooved in the fashion previously set forth. It is also to be noticed that the individual diodes **20** of Fig. 2 have been replaced by a similar grooved p-n junction containing slab of semiconductor material. Although in any commercial construction the number of photosensitive elements in array and the corresponding diodes would range from 12 to 100, only three have been shown for purposes of illustration. When the picture is projected by means of lens **25** onto the array of photosensitive elements **10**, each p-n junction **14** varies in resistance value relative to the intensity of light incident into the grooves of each particular photosensitive element. As the resistance of the p-n junction to the blocking voltage is reduced, the current flow increases from the bias source; thus the photosensitive element serves as a variable resistance which resistance is an inverse function of the intensity of the incident light upon the particular junction. The individual diodes serve in the same function as they did in Fig. 2 preventing the discharge of the output capacitor **24** as the voltage developed across the load resistor **22** diminishes. The output terminal **28** and **30** can be connected into any activation circuit such as an amplifier feeding into a relay or directly into a relay circuit which will produce the desired operation, for example, with a light dimming circuit, to dim the headlights of the car. Suitable delay circuit may be included in the output so that if a further target does not immediately strike the array of photosensitive elements, the headlights will be returned to the high position after the lapse of a certain period of time.

As it is necessary to conserve space and to produce these devices particularly for consumption and utilization in automobiles at as low a price as possible, the resistance elements are preferably of the tape type or printed resistor type. Such resistors consist of carbon or other conductive material dispersed throughout a binder or matrix of resin and terminating in an appropriate conductor for attachment to the rest of the circuit. Most of the device pictured in Fig. 3 could be reduced to a printed circuit type of arrangement. Other types of resistors include the carbon type which is quite inexpensive, the wire wound, metallized film, and borocarbon for temperature stability. The potential producing means for operation of this device is any conventional direct current source, whether it be from a battery or rectified and filtered alternating current, which for automobile light

dimming application might be obtained from the same power supply that services the car radio.

As an example of this invention, a ¼" thick slab of germanium crystal containing a p-n junction was produced which has surface dimensions of 0.5 inch by 0.5 inch. Grooves were cut in the slab, which grooves were of approximately 3/16" in depth and 0.030 inch width so as to divide the two crystals into 12 elements each. Lead wires were attached to the upper surfaces by means of a welded wire. However, prior to this welding of the 32 lead wires each of the plates was thoroughly etched with a chemical etch so as to produce rectifying junctions without surface contamination, so that substantial potentials could be imposed upon the diode and photosensitive arrays without conduction. An ohmic connection **26** for each crystal was made to the non-grooved surface of the respective junction-containing germanium crystals for subsequent connection to other segments of the total circuit. The grooved faces were coated with a resinous material transparent to light so as to protect the exposed junctions from surface contamination which would manifest in lowered resistances. Adding to this arrangement a potential source of 40 volts and individual resistors of 50,000 ohms an output capacitor of 1/10 of a microfarad, an output voltage level as high as 39.5 volts can be achieved with the circuit of Fig. 3. It is merely necessary then to adjust the output circuit for reaction to a certain maximum output voltage, so that when this voltage is reached, through incidence of the target onto the photosensitive array, the light dimming or other mechanism is actuated. The sensitivity of my device is quite high for the red spectrum so that not only does it work most effectively for detecting the headlights of oncoming cars but also readily reacts to the red tail light of cars preceding the one on which the device is mounted.

Although this device so far has been considered primarily as a light dimming device for the automobile market, it has further utility in other fields. In fire protection the present practice is to use a sprinkler system which is activated by the melting of a low temperature alloy which actuates the sprinkler and alarms. With the device of my invention entire areas can be monitored for the presence of fire which could bring into action at a much earlier time the fire fighting apparatus such, as a sprinkler or fog system as the fire need only radiate light rather than wait for its growth to where the heat radiated would actuate the apparatus. This could also be of extreme value in air search operations where it is desired

to discover a target light of substantial intensity and limited area, particularly one which is often obscured to the human eye by an overall substantial background light existing at the time of search. This device is rugged, transportable and also is extremely suitable for remote operation, as well as automatic operation.

As many apparently widely different embodiments of this invention may be made without departing from the spirit and scope hereof, it is to be understood that the invention is not limited to the specific embodiments hereof except as defined in the appended claims.

What is claimed is:

1. An electronic signal translating device comprising a common output capacitor and a plurality of photosensitive circuits; each of said circuits comprising a photosensitive semiconductive diode, a load resistor, and a semiconductive rectifier; said diode connected in series with said resistor, said resistor being connected to one side of said capacitor; said resistor being connected through said rectifier to the other side of the said capacitor; terminal means across said capacitor and adapted for connection to an external device; potential means biasing said plurality of circuits in the non-conductive blocking direction; said rectifiers being connected to said capacitor to permit charging of said capacitor and to prevent discharging of said capacitor through any one of said plurality of circuits; said signal translating device so constructed and arranged that any one of said plurality of circuits is activated to charge said common capacitor by incidence of light of greater than a predetermined value on its diode.

2. The signal translating device of claim 1 in which all the photosensitive diodes are formed on a single semiconductive crystal.

3. The signal translating device of claim 1 in which all the blocking diodes are formed on a single semiconductive crystal.

References Cited in the file of this patent

UNITED STATES PATENTS

2,579,336	Rack	Dec. 18, 1951
2,589,386	Huffman	Mar. 18, 1952
2,641,712	Kircher	June 9, 1953
2,734,149	Rabinow	Feb. 7, 1956
2,812,446	Pearson	Nov. 5, 1957

FOREIGN PATENTS

692,337	Great Britain	June 3, 1953