PCT WORLD INTELLECTUAL PROPERTY ORGANIZATION
International Bureau

INTERNATIONAL APPLICATION PUBLISHED UNDER THE PATENT COOPERATION TREATY (PCT)

(51) International Patent Classification 3 :		(11) International Publication Number: WO 83/ 03986
B04C 5/13	A1	(43) International Publication Date: 24 November 1983 (24.11.83)

(21) International Application Number: PCT/US82/00605

(22) International Filing Date: 7 May 1982 (07.05.82)

(71) Applicant *(for all designated States except US):* THE BAUER BROS. CO. [US/US]; P.O. Box 968, Springfield, OH 45501 (US).

(72) Inventors; and
(75) Inventors/Applicants *(for US only) :* BOUCHILLON, Charles, W. [US/US]; P.O. Box 788, Starkville, MS 39759 (US). WATSON, John, E. [US/US]; 1346C Whispering Woods Drive, West Carrollton, OH 45449 (US).

(74) Agents: HABELT, William, W. et al.; Combustion Engineering, Inc., Corporate Patent Dept. 6107-1936, 1000 Prospect Hill Road, Windsor, CT 06095 (US).

(81) Designated States: AT (European patent), BE (European patent), CH (European patent), DE (European patent), FI, FR (European patent), GB (European patent), LU (European patent), NL (European patent), SE (European patent), US.

Published
With international search report.

(54) Title: HYDROCYCLONE FEATURING HYDRAULIC JUMP IN OVERFLOW PASSAGE

(57) Abstract

A hydrocyclone (10) featuring a conical section (34) in the overflow passage (30) which produces a 'hydraulic jump' in the flow through the overflow passage which converts kinetic energy to pressure energy and to produce a resultant application of the converted energy to the slurry moving within the separating chamber to increase its spin velocity.

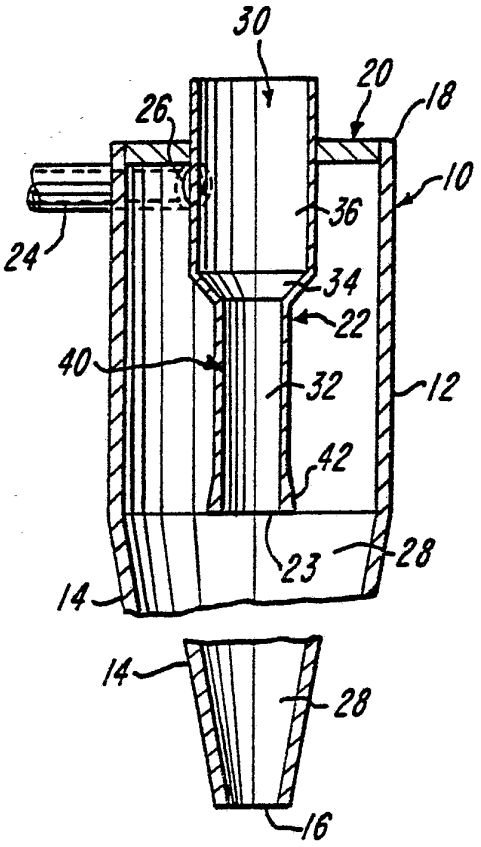

FOR THE PURPOSES OF INFORMATION ONLY

Codes used to identify States party to the PCT on the front pages of pamphlets publishing international applications under the PCT.

AT	Austria	**LI**	Liechtenstein
AU	Australia	**LK**	Sri Lanka
BE	Belgium	**LU**	Luxembourg
BR	Brazil	**MC**	Monaco
CF	Central African Republic	**MG**	Madagascar
CG	Congo	**MR**	Mauritania
CH	Switzerland	**MW**	Malawi
CM	Cameroon	**NL**	Netherlands
DE	Germany, Federal Republic of	**NO**	Norway
DK	Denmark	**RO**	Romania
FI	Finland	**SE**	Sweden
FR	France	**SN**	Senegal
GA	Gabon	**SU**	Soviet Union
GB	United Kingdom	**TD**	Chad
HU	Hungary	**TG**	Togo
JP	Japan	**US**	United States of America
KP	Democratic People's Republic of Korea		

HYDROCYCLONE FEATURING HYDRAULIC JUMP IN OVERFLOW PASSAGE

BACKGROUND OF THE INVENTION:

This invention relates to improvements in hydrocyclones, which includes centrifugal separators and centrifugal cleaners. Its embodiment provides an improved construction for the overflow tube of a hydrocyclone which has unexpectedly resulted in the recovery of kinetic energy in the overflow as well as other significant benefits in the performance of the hydrocyclone. This is particularly evidenced in the application of the invention to the processing of pulp in a pulp refining operation. Accordingly, the invention will be described in this frame of reference, but only for purpose of illustration and not by way of limitation.

A hydrocyclone is a device used for cleaning, separation and/or classification of the contents of a relative fluid mass. As applied to a pulp slurry, the objective in its use is to extract and separate therefrom elements or particles of wood or other fibrous matter in the slurry best suited, and in a form best suited, for use in a particular end product. It has been found in many cases that the level and amount of energy required for the operation of prior art hydrocyclones or hydrocyclone systems can be quite substantial. It has also been found that the extent of the pressure drop which occurs in the use of prior art hydrocyclones to process a pulp slurry limits the throughput of the slurry as well as its flow rate in moving through and from the hydrocyclone. The problems noted are and have been a matter of serious concern for a long period of time.

BUREAU OMPI WIPO INTERNATIONAL

The present invention not only overcomes the foregoing problems to a substantial degree but its application to any hydrocyclone of a given size provides it with an inherent mode of operation resulting in an increase in its feed flow rate as well as a significant improvement in its cleaning efficiency. As a matter of fact, the application of the invention enables more of the energy applied in use of a hydrocyclone to contribute, very effectively, to the spin of the flow of a slurry introduced to and moved within and longitudinally of the hydrocyclone separating chamber. The result of this last feature is a cleaner and more effective separation of the contents of the slurry which is subjected to a separating procedure.

As far as novelty is concerned, there is no knowledge of any prior hydrocyclone art which is specific to the improvements of the present invention. A search of the records of the U. S. Patent and Trademark Office appears to confirm this fact. All that the search produced is exemplified by the following patents:

Patent No.	Name	Date
3,037,628	G. H. Tomlinson II	June 5, 1962
3,129,173	W. G. A. Schulze	April 14, 1964
3,261,467	N. A. L. Wikdahl	July 19, 1966
3,613,887	N. A. L. Wikdahl	Oct. 19, 1971
3,746,173	W. H. Daniel	July 17, 1973
4,259,180	Jorma Surakka et al	Mar. 31, 1981

BUREAU OMPI WIPO INTERNATIONAL

SUMMARY OF THE INVENTION:

Preferred embodiments of the present invention comprise a hydrocyclone the body of which defines therein a separating chamber having an overflow end and an underflow end, an inlet and at least two outlets, one to each of the opposite ends of the separating chamber. One of these outlets provides an underflow outlet and the other an overflow outlet. The inner wall of the hydrocyclone has a tubular configuration and the underflow and overflow outlets are in a substantially coaxial alignment. In the introduction of a pulp slurry, the contents of which are to be separated and/or cleaned or classified, the inlet applies the slurry tangential to the inner wall surface of the hydrocyclone to develop within its separating chamber a vortex-type flow of the slurry producing counterflowing vortices thereof. The result of the counterflowing vortices is to induce, normally, a particularly desired portion of the contents of the slurry to move to an area within the separating chamber comprising its central longitudinally extending core from which such material is inherently induced to flow to and through the overflow outlet of the hydrocyclone. At the same time another portion of the contents of the slurry within the separating chamber included in the outer of said counterflowing vortices is caused to move to and through the underflow outlet of the hydrocyclone. In accordance with the invention, the overflow outlet is defined by an overflow tube structure, hereinafter referred to as an overflow tube, the diameter of

BUREAU OMPI WIPO INTERNATIONAL

the inner surface of which is stepped along its length. As will be obvious, the inner surface of the overflow tube defines an overflow passage one end of which communicates with the overflow end of the hydrocyclone separating chamber and the other end of which connects to a conduit or conduits for directing the discharge from the overflow tube to a desired place of storage or use. Per the invention the inner surface of the overflow tube and the overflow passage which it defines are formed to produce therein a conversion of kinetic energy in flow therethrough from the hydrocyclone separating chamber to pressure energy. This produces inobvious and most advantageous improvements in the performance of the hydrocyclone. Actually, what has been observed to occur in the use of an overflow tube having an overflow passage formed in accordance with the invention is a "hydraulic jump" phenomena.

When comparing the operation of a conventional hydrocyclone having an overflow passage in accordance with the prior art with the operation of a hydrocyclone of the same size embodying the invention, it is seen that the use of the invention results in the following benefits and improvements:

a. A decrease in pressure drop in the flow through the hydrocyclone;

b. An increase in the "spin" of the material introduced to and passed through the hydrocyclone separating chamber;

c. A significant increase in the cleaning and separating efficiency of the hydrocyclone and an increase in its operating capacity and feed flow rate;

d. An increase in the throughput or flow rate of the

BUREAU OMPI WIPO INTERNATIONAL

material to be separated or cleaned in the movement thereof through and from the separating chamber of the hydrocyclone.

A preferred embodiment of the invention provides that the outflow passage defined by its overflow tube includes straight line segments of its length which are spaced by a relatively short coaxial segment which has the shape of a truncated cone. In this case the upstream of these straight line segments will have a diameter corresponding to the smallest diameter of the relatively short segment which has the configuration of a truncated cone while the straight line segment of the outflow passage immediately downstream of this short segment will have a diameter which is relatively enlarged as compared to that of the upstream segment and corresponds with that of the downstream end of said short segment. In use of this preferred embodiment the efficiency of the operation of a hydrocyclone of a given size is substantially improved and there is a corresponding saving and added utilization of the available energy. A significant aspect of the invention is the economy possible in its embodiment.

While in describing the invention reference is made herein to an overflow tube applied to a conventionally operating hydrocyclone, it is to be understood that an outflow passage of the nature herein described and claimed may be formed in any tube or body structure providing an outlet from the separating chamber of any type hydrocyclone and produce similar results and benefits in its use.

It is therefore a primary object of the invention to provide economically achieved improvements in hydrocyclones

BUREAU OMPI WIPO INTERNATIONAL

which are easy to fabricate and which render such devices more efficient and satisfactory in use, adaptable to a wide variety of applications and less likely to adversely function.

Another object is to provide hydrocyclones with an outflow passage the construction of which creates hydraulic jump in the flow therethrough and consequent improvements in the hydrocyclone operating efficiency.

A further object is to provide an overflow tube for a hydrocyclone the construction of which converts kinetic energy in flow therethrough to pressure energy, thereby to improve the operating and cleaning or separating efficiency of the associated hydrocyclone.

An additional object is to provide an outflow tube in connection with a hydrocyclone wherein immediately adjacent segments of the outflow passage which it defines are spaced and interconnected by a short segment of the length of the outflow passage which has the configuration of a truncated cone, producing a conical transition and expansion of the cross section of the outflow passage from the smaller diameter of the passage segment immediately upstream to the larger diameter of the passage segment immediately downstream of said short segment.

A further object is to provide a reduced pressure drop in the operation of a hydrocyclone cleaner of a given dimension. Another object is to provide increased throughput or flow rate of a pulp slurry applied to a hydrocyclone for separation, cleaning or classification of its contents.

BUREAU OMPI WIPO INTERNATIONAL

An additional object of the invention is to provide an overflow tube and an assembly thereof with a hydrocyclone possessing the advantageous structural features, the inherent meritorious characteristics and the means and mode of operation herein described.

With the above and other incidental objects in view as will more fully appear in the specification, the invention intended to be protected by Letters Patent consists of the features of construction, the parts and combinations thereof, and the mode of operation as hereinafter described or illustrated in the accompanying drawings, or their equivalents.

Referring to the drawings wherein are shown one or more embodiments of the present invention,

Figs. 1-4 each schematically exhibit the application of an overflow tube to a hydrocyclone having a form and construction and composition which is basically similar but somewhat different in each of the illustrations.

Like parts are indicated by similar characters of reference throughout the several views.

As noted previously, the invention is herein illustrated and described with particular reference to its application to a hydrocyclone of the type advantageously used for the processing of the contents of a pulp slurry.

The embodiment of Fig. 1 illustrates a hydrocyclone of this type the body or housing of which comprises an integral tubular shell-like peripheral wall structure 10 one longitudinally extending section 12 of the length of which is

BUREAU OMPI WIPO INTERNATIONAL

cylindrical in configuration. The diameter of the cross section of the section 12 is uniform the length thereof. The section 12 has one end thereof integrated with and longitudinally extended by a coaxial section 14 of the tubular wall structure 10. The section 14 which is thus a direct extension of the section 12 has the shape of a truncated cone which conically converges from the end of the section 12 with which it is integrally connected. The truncated apex end of the section 14 rims a small diameter opening 16 at this end of the tubular wall structure 10.

Connected with and in bridging relation to the end 18 of the section 12 which is remote from the section 14 is an annular plate 20. The outer limit of plate 20 is fixed in a sealed tight relation to the end 18 of section 12 and its inner limit is fixed about and in a sealed tight relation to the outer wall surface of a tubular overflow structure, hereinafter referred to as an overflow tube 22.

A short tube 24 has one end thereof integrally connected to the section 12 immediately of the plate 20 to have what constitutes its discharge end rim an inlet opening 26 in the wall structure 10. The short tube 24 is so related to the opening 26 and the opening 26 so related to the inner surface of the wall structure 10 as to provide a tangential inlet to the separating chamber 28 which is defined by the plate 20 and the wall structure 10.

As is well recognized by those versed in the pulp processing art, the plate 20 defines the overflow end of the

BUREAU OMPI WIPO INTERNATIONAL

separating chamber 28 while the opening at the convergent end of the wall section 14 defines what is considered to be the underflow end and outlet 16 from the chamber 28. Correspondingly, the overflow tube 22 defines an overflow passage 30 leading from and communicating at its inlet end with the separating chamber 28.

As seen in Fig. 1, the overflow tube 22 is coaxially aligned with the underflow outlet 16. Furthermore, the inner wall surface of the overflow tube 22 is so constructed that the overflow passage 30 has a central longitudinal axis the configuration of which is that of a straight line. As the overflow tube 22 is applied to the hydrocyclone in Fig. 1, its extremity which is innermost of the chamber 28 occupies a plane commonly occupied by the integrated ends of the sections 12 and 14 of the wall structure 10. Correspondingly, the innermost extremity of the overflow tube 22 rims the inlet opening 23 to its overflow passage 30. This inlet end of the passage 30 exhibits the diameter of a segment 32 of the length of the overflow passage which extends from its inlet end to a plane transversely of and perpendicular to the central longitudinal axis of the chamber 28 which is parallel to the plane of the inlet end and spaced therefrom slightly more than one-half the distance between the inlet end and the outermost surface of the plate 20. The segment 32 of the passage 30 has a uniform but relatively small diameter and is immediately followed by a segment 34 of the passage 30 which is very short in length. The portion of the inner wall surface of the tube 22 bounding the segment 34 has and provides the segment 34 with a configuration corresponding to that of a truncated cone. The cross sectional area exhibited by one end of this truncated cone has a diameter corresponding to that of the segment 32 of the overflow passage which is immediately upstream

BUREAU OMPI WIPO INTERNATIONAL

thereof and opens thereto. From the segment 32 the segment 34 is configured to conically expand as its larger diameter extremity connects to the immediately downstream segment 36 of the overflow passage 30. Of course the largest diameter of the segment 34 corresponds to the diameter of the section 36 of the overflow passage, which is uniform along its length. Thus, the overflow tube 22 has an inner wall surface which is stepped as to its diameter along the length thereof, thereby to provide an upstream segment 32 and a downstream segment 36 of the overflow passage spaced by the interposed conical segment 34.

As shown in Fig. 1, the thickness of the wall 40 of the overflow tube 22 is uniform except at its inlet end 42, where its outer surface expands to produce thereon a bell-shape immediately about the inlet to the overflow passage. Accordingly, except for the bell-shaped modification at its inlet end, the outer wall surface of the overflow tube has a configuration along its length which corresponds in all respects with the configuration of its inner wall surface which defines the overflow passage. Further noting Fig. 1, the overflow tube 22, as shown, has its enlarged diameter end projected outwardly of the plate 20 a limited extent and perpendicular thereto.

Fig. 2 shows a hydrocyclone structure identical to that shown in and described with reference to Fig. 1 except for the construction and relative position of the illustrated overflow tube and the length of the section 12 of the wall

BUREAU OMPI WIPO INTERNATIONAL

structure 10 being somewhat shorter than that illustrated in Fig. 1. In Fig. 2 the overflow tube 52 of the hydrocyclone is distinguished by a uniformly cylindrical outer wall surface 50 the diameter of which is uniform from one end thereof to the other. Also, the overflow tube 52 is so positioned in its perpendicular relation to the plate 20 that its respective ends are substantially equidistantly spaced from the adjacent surfaces of the plate 20 and its innermost extremity is spaced longitudinally and outwardly from the plane transversely of and perpendicular to the longitudinal axis of the separating chamber 28 which intersects the connection between the sections 12 and 14 of the wall structure 10. The inner wall surface 58 defining the overflow or outflow passage 60 of the overflow tube 52 has the same general configuration as the inner wall surface of the overflow tube 22 but differs in that here the length of the smaller diameter upstream segment of the overflow passage which corresponds to the segment 32 of Fig. 1 is shorter and the length of its larger diameter downstream segment which corresponds to the segment 36 of Fig. 1 is longer than the respective lengths of the corresponding segments of the overflow passage 30 of the overflow tube 22.

The hydrocyclone assembly of Fig. 3 is identical to that of Fig. 1 except for the following differences.

BUREAU OMPI WIPO INTERNATIONAL

Its overflow tube 22' which otherwise has a construction and configuration identical with that of the overflow tube 22 differs by reason of the elimination of the bell shape at the mouth of its inlet end. Another difference in the hydrocyclone assembly shown in Fig. 3 from that of Fig. 1 is that its overflow tube is so mounted with reference to the plate 20 to provide that the portion of the wall structure of the overflow tube 22' bounding the segments 34 and 36 of its overflow passage are positioned exteriorly of the plate 20. As a result the opening in the plate 20 is reduced in diameter sufficient to accommodate and seal about the reduced external diameter portion of the wall of the overflow tube 22' bounding the upstream segment 32 of the overflow passage 30. As may be seen with reference to Fig. 3, the relative position of the overflow tube 22' provides that the reduced diameter end of the conically configured segment 34 of its overflow passage lies in a plane corresponding to the plane of the outer surface of the plate 20. Note further that in Fig. 3 the axial length of the section 12 of the wall structure 10 is shortened in correspondence with the limited projection of the inlet end portion of the overflow tube with reference to the inner surface of the plate 20.

BUREAU OMPI WIPO INTERNATIONAL

In the hydrocyclone modification of Fig. 4, the configuration of the wall structure 10 provides that the sections 12 and 14 thereof are relatively elongated but otherwise similar to the corresponding sections in Fig. 1. Here, however, rather than finding a use of a head plate such as the plate 20 incorporated in the embodiments of Figs. 1, 2 and 3, we find the overflow end of the separating chamber 28 defined by the innermost surface 62 of a generally cylindrical body forming a head 64 plug fit in and to the end of the section 12 of wall structure 10 remote from the section 14. The head 64 is configured to provide the overflow end of the hydrocyclone with an axial inlet 66 which is a blind bore parallel to the central longitudinal axis of its separating chamber 28. The inlet 66 opens laterally to one end of a restricted helical flow passage 68 defined by the head with the inner wall surface of the end of the wall structure 10 in which the head is plug fit. The flow passage 68 is extended and exits to a continuation of its helical form defined by the inner surface 62 of the head which defines the overflow end of the separating chamber 28. With the arrangement provided, a slurry directed inwardly of the head by way of the inlet 66 will move in a high velocity flow through the passage 68 and in exit from the passage 68 will move over the surface 62 in a continuing helical flow pattern about a central relatively axially projected tubular portion 70 of the head. The tubular projection 70 is thus innermost of the head 64 and projects

BUREAU OMPI WIPO INTERNATIONAL

inwardly of the separating chamber from the surface 62 to have its innermost end terminate in a plane parallel to and in an adjacent spaced relation to and short of a plane transverse to the separating chamber 28 and perpendicular to its longitudinal axis which intersects the wall structure 10 at the connection between the sections 12 and 14 thereof. The tubular projection 70 defines part of the inlet segment 74 of an overflow passage 72 which is directed through the head from the separating chamber 28. In this case the overflow passage 72 is composed of successive communicating segments a portion of which is angularly diverted and offset from the line of the segment 74 as the overflow passage extends through the head to have its outermost segments position parallel to the line of the inlet segment 74.

The segment 76 of the overflow passage 72 immediately following the inlet segment 74 is angularly diverted from the line of segment 74 as it extends outwardly from the separating chamber and forms a continuation of the segment 74. The segments following the segment 76, in succession, which form a continuation thereof and each other, are respectively numbered in succession 78, 80 and 82. The segments 78, 80 and 82, which have a coaxial alignment, are diverted, commonly, from the line of the segment 76 to extend in a line offset from and parallel to the line of the inlet segment 74. The diameter of the segments 74, 76 and 78 of the overflow passage are essentially the same and these segments are generally elongate, but in the case

BUREAU OMPI WIPO INTERNATIONAL

illustrated successively somewhat shorter in length. The segment 80, however, is very short in length and its cross section exhibits the shape of a conically expanding truncated cone. The smallest diameter of this cone is at its end immediately of the segment 78 and corresponds in dimension to the dimension of its diameter. The largest diameter end of the cone of the segment 80 opens to the segment 82 the diameter of which corresponds thereto.

The operation of any one of the foregoing embodiments of the invention is essentially the same, as are the unexpected benefits and advantages attendant its use. Basically, a slurry the contents of which are to be separated, cleaned and/or classified is in each case directed through the hydrocyclone inlet to the separating chamber 28 to move therein and the length thereof in a helical flow pattern producing counter-flowing vortices which inherently result in a portion of the slurry contents which have the form of fibers and fiber bundles which are light in weight and desirable in form being caused to move to the inner vortex portion of the slurry flow. As this most desirable portion of the slurry contents reaches the inner vortex portion or core of the cleaner, as a result thereof it will move, inherently, to and through the overflow passage 30, 60, or 82, as the case may be, depending upon the modification. The outer portions of the slurry flow will, in the case illustrated, exit from the separating chamber by way of the underflow outlet 16. It has been found in test and by practice that by virtue of

BUREAU OMPI WIPO INTERNATIONAL

the inner wall surface of the overflow tube which bounds and defines the configuration of the overflow passage and in particular the inclusion therein of its conical segment 34, 80 there is produced in the flow through the overflow passage the equivalent of a "hydraulic jump". The consequence of this is that there is an actual conversion of kinetic energy to pressure energy in the overflow. This is extremely significant since as far as has been able to be determined in any prior art, no one has heretofore achieved "hydraulic jump" in a flow through a pipe. Apparently no one practicing in applied fluid mechanics has heretofore observed this phenomena or contemplated the same in flow through a pipe, either as a scientific curiosity or as a natural phenomena which may be harnessed for beneficial purposes. The construction of an overflow passage as described in reference to each embodiment of the invention has been found to serve to make additional energy available and cause the swirl velocity within a hydrocyclone of a given size to be higher than in a hydrocyclone of the same size having a conventional overflow tube configuration. More than this, the result of making such additional energy available is the production of greater separating and cleaning forces within the separating chamber of the hydrocyclone.

It has been determined that the expansion of the overflow passage as here provided triggers a flow condition in the overflow tube that causes a conversion of the kinetic energy to pressure energy with a reasonably high efficiency

BUREAU OMPI WIPO INTERNATIONAL

estimated at about 75%. As an adjunct to the improved separating efficiency caused by the incorporation of the invention, there is not only improved cleaning efficiency resulting but an increase in the throughput as well as the flow rate of a slurry as it is moved through and from a hydrocyclone per the invention.

Accordingly, common to the various embodiments of the invention illustrated is an expansion from an upstream to a downstream segment of an overflow passage achieved through the medium of a short expanding segment of the overflow passage which has impressive results.

In preferred and effective embodiments of the invention the conically expanded segment 34, 80, of the overflow passage, which is very short in length, has a "free expansion" cone angle expanding downstream in the direction of flow which can range from about 40° to about 80° as measured from the center line of the truncated conical segment to the conical surface defining its expansion and shape.

In most preferred embodiments of the invention, the length of the segment of the overflow passage immediately upstream of the conically expanding segment should be equal to at least three times the dimension of the diameter of the inlet to the overflow passage. Furthermore, it is preferred and most desirable that the extension of the conical segment of the flow passage in the segment of this passage which is immediately downstream thereof should have a length equal to at least twice the dimension of the maximum diameter of the conical segment of the flow passage.

BUREAU OMPI WIPO INTERNATIONAL

For optimal results, the segments of the overflow passage immediately upstream and downstream of the conically expanding short segment thereof should have a coaxial relation.

As far as the expansion ratio is concerned, for a most significant conversion of kinetic energy to pressure energy in the overflow passage 30, 82, its diameter downstream of the conically expanded portion of the flow passage should be from about 1-1/2 to 2 times its diameter immediately upstream thereof. Smaller ratios could provide some benefit but would not achieve the practical gains so advantageous in the use of a hydrocyclone as herein described.

Laboratory tests have established that when a 6" diameter hydrocyclone has an overflow tube construction such as herein described, there is an approximately 15% increase in its feed flow rate as compared to that found in the operation of a hydrocyclone of the same size having the same inlet and outlet sizes and a conventional overflow tube. This increase in flow rate is somewhat larger for smaller diameter hydrocyclones and somewhat less for larger diameter hydrocyclones. In any case, the invention does provide a significant increase in flow rate. At the same time it has been found that the cleaning efficiency is likewise significantly improved thereby, by about 7%.

Considering the advantages and benefits of achieving hydraulic jump in the flow through an overflow tube of a hydrocyclone in accordance with the present invention, it follows that one can operate a hydrocyclone using a smaller

BUREAU OMPI WIPO INTERNATIONAL

diameter for the inlet to the overflow tube than would normally be provided and achieve therein better cleaning and separating efficiency with the same overall pressure drop as would be conventionally experienced using a prior art overflow tube. By the same token, one can have the benefit of the invention and operate a hydrocyclone with a pressure drop reduced, for example, from 35 to 25 p.s.i.g. and still get a cleaning and separating efficiency equivalent to that found in the operation of a conventionally constructed hydrocyclone unit wherein the pressure drop is 35 p.s.i.g. In this latter case, the invention application provides an additional benefit, namely an approximately 20% increase in the throughput of the hydrocyclone.

It is noted that the somewhat devious overflow passage which is illustrated in the invention embodiment shown in Fig. 4 of the accompanying drawings has been found to function equally as well as the other embodiments illustrated.

While the foregoing suggests certain limitations as to the lengths and diameters of the critical segments of the overflow passage, there may be limited deviation therefrom without departing from the principles and basics of the teaching herein set forth. One caution is definitely to be observed. If the expansion provided in the overflow passage by virtue of the short segment 34, 80, which induces hydraulic jump in flow therethrough, is immediately followed by a sharp turn in the overflow passage, this will be detrimental to the efficiency of the hydrocyclone structure which it services.

BUREAU OMPI WIPO INTERNATIONAL

In summary, simple though the invention might be the advances afforded thereby are so significant that hydrocyclones embodying the same are not only highly advantageous for use in pulp processing systems but they inherently provide means and methods of a highly improved nature which may be applied to the cleaning of coal, the dressing of minerals, commercial extraction systems, starch processing systems and, for that matter, the removal of light particles from any liquid vehicle.

From the above description it will be apparent that there is thus provided a device of the character described possessing the particular features of advantage before enumerated as desirable, but which obviously is susceptible of modification in its form, proportions, detail construction and arrangement of parts without departing from the principle involved or sacrificing any of its advantages.

While in order to comply with the statute the invention has been described in language more or less specific as to structural features, it is to be understood that the invention is not limited to the specific features shown, but that the means and construction herein disclosed comprise but one of several modes of putting the invention into effect and the invention is therefore claimed in any of its forms or modifications within the legitimate and valid scope of the appended claims.

BUREAU OMPI WIPO INTERNATIONAL

CLAIMS

1. A hydrocyclone comprising a housing having a separating chamber, means defining an inlet to said chamber and at least two outlets therefrom, said inlet being constructed and arranged to deliver a slurry or other fluid mass containing solids the contents of which are to be separated, cleaned or classified, to said chamber in a substantially helical, swirling, flow pattern to cause the movement thereof within said chamber in counterflowing vortices inherently causing solids in the flow which are light and relatively small in size to move to the inner vortex of the flow and exit from one outlet while the remainder of said flow embodying large and heavy solids seeks other outlet from said chamber, said one outlet being a longitudinally extended passage having an inlet end open to said separating chamber and a discharge end remote therefrom, and means bounding a relatively short segment of the length of said passage, at a location spaced downstream from said passage inlet constructed and arranged to convert kinetic energy in the flow therethrough to pressure energy and produce a resultant application of said converted energy to increase the "spin" velocity of said helical swirling flow of said slurry as it moves in said counterflowing vortices within said chamber.

BUREAU OMPI WIPO INTERNATIONAL

2. Apparatus as in claim 1 wherein said means bounding said relatively short segment of said passage is formed to provide that said relatively short segment of said passage has the shape of a truncated cone the minimum diameter end of which is upstream from its maximum diameter end.

3. A hydrocyclone as in claim 2 characterized in that the cone angle of said truncated cone is in the range from about 40° to about 80° as measured from its center line to its outer peripheral limit.

4. Apparatus as in claim 1, 2 or 3 wherein a segment of said passage immediately upstream of said relatively short segment thereof has a diameter which corresponds, substantially, to the diameter of the upstream end of said relatively short segment and a segment of said passage immediately downstream of said relatively short segment has a diameter corresponding, substantially, to that of the downstream end of said relatively short segment.

5. A hydrocyclone as in any one of claims 1, 2 or 3 wherein said relatively short segment of the length of said passage is interposed between and forms a continuation of segments of said passage which are respectively immediately upstream and immediately downstream thereof and said segments are arranged in a substantially coaxially aligned relation.

BUREAU OMPI WIPO INTERNATIONAL

6. A hydrocyclone as in claim 1 wherein said relatively short segment of the length of said passage is interposed between and forms a continuation of an upstream segment of said passage and a further continuation thereof provided by a segment of the length of said passage which is immediately downstream of said relatively short segment and the length of said upstream segment has a dimension which is at least equal to about three times the diameter of the inlet to said passage.

7. A hydrocyclone as in claim 1 wherein said relatively short segment of the length of said passage is interposed between and forms a continuation of segments of said passage which are respectively immediately upstream and immediately downstream thereof and the dimension of the diameter of said downstream segment is from about 1.5 to about 2.0 times the dimension of the diameter of said upstream segment.

8. A hydrocyclone as in claim 7 characterized in that the length of said upstream segment is equal in dimension to at least about three times the diameter of the inlet to said passage.

9. A hydrocyclone as in claim 1 characterized in that said longitudinally extended passage providing said one outlet is bounded by a wall surface which is generally circular in cross section the diameter of which is stepped along the length of said passage and said means bounding said relatively short segment of the length of said passage is a portion of

BUREAU OMPI WIPO INTERNATIONAL

the length of said bounding wall surface located intermediate and spaced from its respective ends.

10. A hydrocyclone as in claim 9 characterized in that the diameter of said passage in a segment of its length extending from its inlet end to said relatively short segment of said flow passage is substantially uniform along the length thereof, said relatively short segment of the length of said passage expands as to its cross section in a graduated fashion in the direction of the downstream end of said passage and the diameter of the segment of said passage immediately following the downstream end of said relatively short segment thereof is larger than the diameter of the segment of said passage extending from the inlet end of said passage to said relatively short segment thereof.

11. A hydrocyclone as in claim 1 characterized in that a first portion of the length of said longitudinally extended passage providing said one outlet which extends from its inlet end is substantially coaxial with said separating chamber and said passage is then angled and offset from said first portion and extends in a portion offset and substantially parallel to said first portion.

12. Apparatus for connection with the housing of a hydrocyclone to define an outlet from its separating chamber comprising a body for connection to the housing, said body having therein a flow passage the inlet to which in connection thereof to the hydrocyclone housing opens to its separating chamber, said flow passage having a discharge end, means

BUREAU OMPI WIPO INTERNATIONAL

defining a portion of said flow passage at a location spaced from its inlet end constructed and arranged to convert kinetic energy in flow therethrough to pressure energy.

13. Apparatus as in claim 12 characterized in that said flow passage has a bounding wall surface a portion of which is formed to per se provide said means to convert kinetic energy to pressure energy in flow therethrough.

14. Apparatus as in claim 12 or claim 13 characterized in that said flow passage has portions thereof immediately upstream and immediately downstream of said means to convert kinetic energy in the flow through said passage to pressure energy which differ in their cross-sectional area and said upstream portion has a cross-section which is smaller in dimension than that of said downstream portion.

15. Apparatus as in claim 12 characterized in that said means defining a portion of said flow passage bounds a relatively short segment of said passage which has the shape of a truncated cone the minimum diameter end of which is upstream from its maximum diameter end, having regard for the direction of flow through said passage in use thereof.

16. Apparatus as in claim 15 characterized in that the cone angle of the shape of said relatively short segment of said flow passage is in the range from about 40° to about 80° as measured from the center line to the outer peripheral limit of the shape of said relatively short segment.

BUREAU OMPI WIPO INTERNATIONAL

17. Apparatus as in claim 15 or claim 16 wherein said relatively short segment of the length of said flow passage is interposed between and forms a continuation of segments of the length of said passage which are respectively immediately upstream and immediately downstream thereof and said upstream segment, at the end thereof which connects with said relatively short segment, has a dimension which is at least equal to about three times that of the diameter of the inlet to said flow passage.

18. Apparatus as in claim 12 wherein said portion of said flow passage constructed and arranged to convert kinetic energy in the flow therethrough forms a relatively short segment of the length of said flow passage which is interposed between and forms a continuation of segments of said passage which are respectively immediately upstream and immediately downstream thereof and the dimension of the diameter of said downstream segment is from about 1.5 to about 2.0 times the dimension of the diameter of said upstream segment.

19. Apparatus as in claim 12 wherein said flow passage is pipe-like in form the length thereof and the diameter thereof adjacent its inlet end is less than the diameter thereof adjacent its remote discharge end and said means to convert kinetic energy to pressure energy is located intermediate the ends of said flow passage.

BUREAU OMPI WIPO INTERNATIONAL

20. Apparatus as in claim 12 characterized in that portions of said flow passage immediately upstream and immediately downstream of said means to convert kinetic energy in the flow through said passage to pressure energy are pipe-like in character and differ in cross-sectional area and in a coaxially aligned relation.

21. Apparatus as in claim 12 wherein said flow passage includes portions thereof which are angularly related and portions thereof which are offset from one another and said means to convert kinetic energy to pressure energy defines an intermediate part of the length of one of said offset portions which is offset from and substantially parallel to the line of the inlet to said flow passage.

BUREAU OMPI WIPO INTERNATIONAL

FIG-1

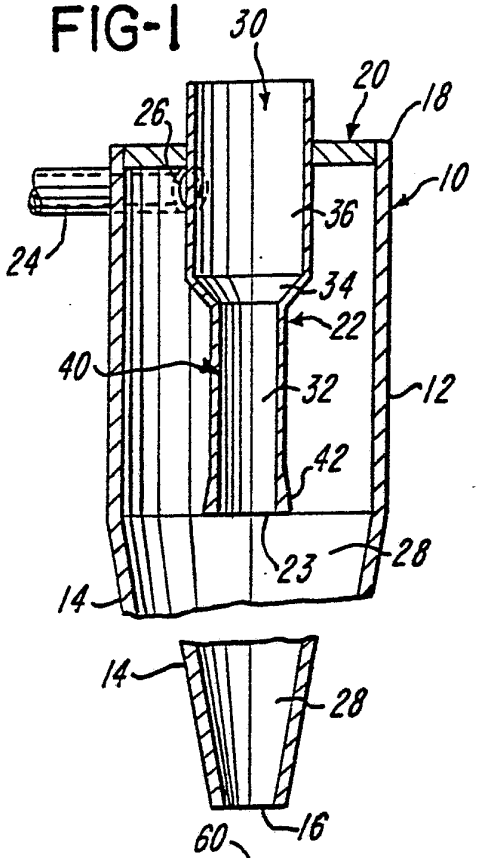

FIG-2

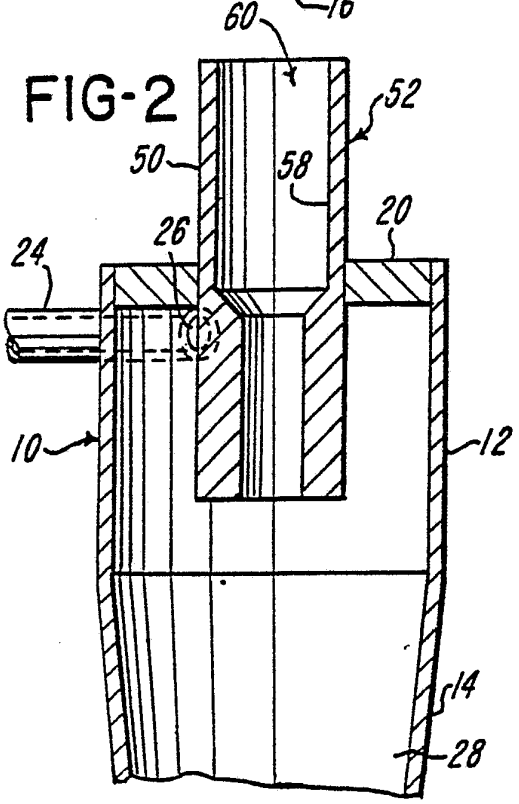

FIG-3

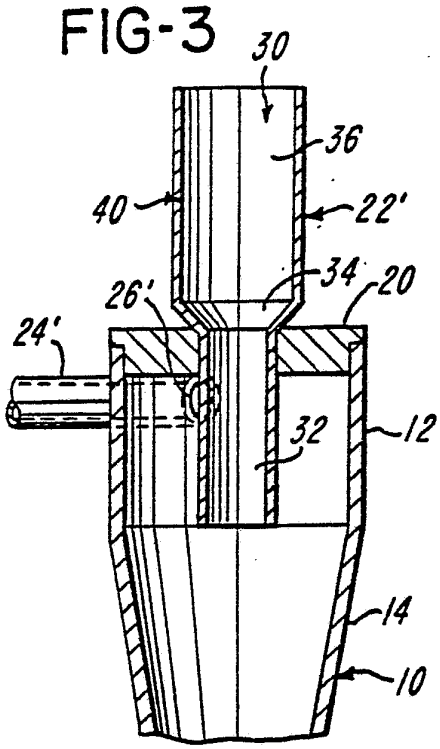

FIG-4

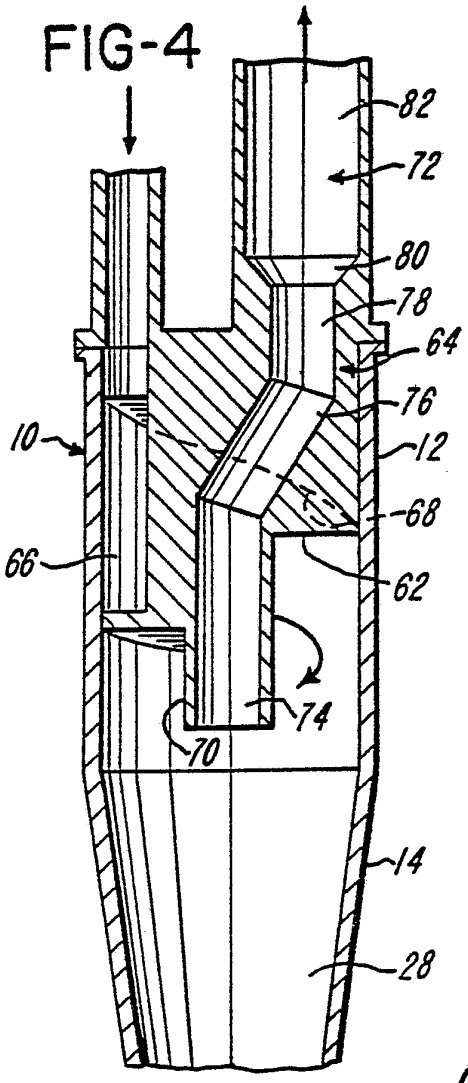

BUREAU OMPI WIPO INTERNATIONAL

INTERNATIONAL SEARCH REPORT

International Application No PCT/US82/00605

I. CLASSIFICATION OF SUBJECT MATTER (if several classification symbols apply, indicate all) [3]

According to International Patent Classification (IPC) or to both National Classification and IPC

INT. CL.[3] B04C 5/13

II. FIELDS SEARCHED

Minimum Documentation Searched [4]

Classification System	Classification Symbols
US	209/144,211 55/459R 210/512.1,512.2

Documentation Searched other than Minimum Documentation to the Extent that such Documents are Included in the Fields Searched [5]

III. DOCUMENTS CONSIDERED TO BE RELEVANT [14]

Category *	Citation of Document, [16] with indication, where appropriate, of the relevant passages [17]	Relevant to Claim No. [18]
A	US, A, 2,816,490 PUBLISHED 17 DECEMBER 1982 BOADWAY ET AL.	1-21
A	US, A, 2,927,693 PUBLISHED 08 MARCH 1960 FREEMAN ET AL.	1-21
A	US, A, 3,057,476 PUBLISHED 09 OCTOBER 1962 GILBERT.	1-21
A	US, A, 3,114,510 PUBLISHED 17 DECEMBER 1963 Mc CARTY ET AL.	1-21
A	US, A, 3,501,014 PUBLISHED 17 MARCH 1970 FITCH ET AL.	1-21

* Special categories of cited documents: [15]

"A" document defining the general state of the art which is not considered to be of particular relevance

"E" earlier document but published on or after the international filing date

"L" document which may throw doubts on priority claim(s) or which is cited to establish the publication date of another citation or other special reason (as specified)

"O" document referring to an oral disclosure, use, exhibition or other means

"P" document published prior to the international filing date but later than the priority date claimed

"T" later document published after the international filing date or priority date and not in conflict with the application but cited to understand the principle or theory underlying the invention

"X" document of particular relevance; the claimed invention cannot be considered novel or cannot be considered to involve an inventive step

"Y" document of particular relevance; the claimed invention cannot be considered to involve an inventive step when the document is combined with one or more other such documents, such combination being obvious to a person skilled in the art.

"&" document member of the same patent family

IV. CERTIFICATION

Date of the Actual Completion of the International Search [2]	Date of Mailing of this International Search Report [2]
08 SEPTEMBER 1982	10 SEP 1982
International Searching Authority [1]	**Signature of Authorized Officer [20]**
ISA/US	RALPH J. HILL