Jan. 14, 1936. J. BAUER 2,027,625

SHEET HOLDER

Filed June 28, 1934

Fig. 1.

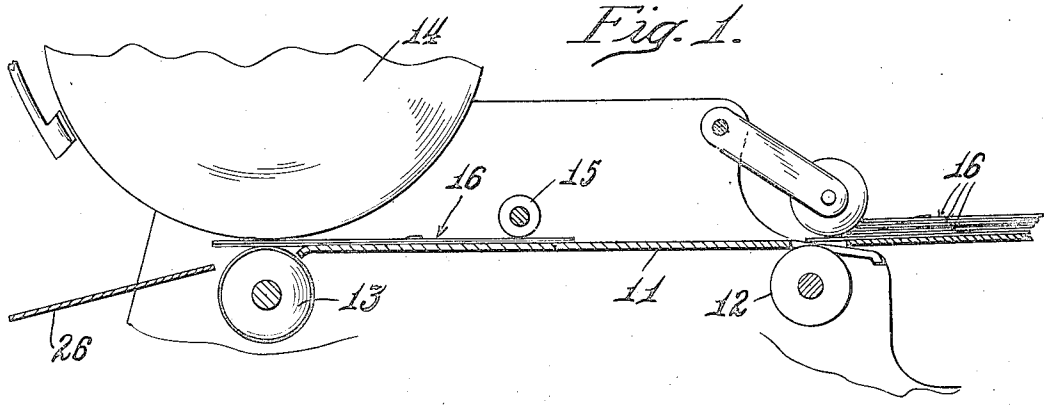

Fig. 2.

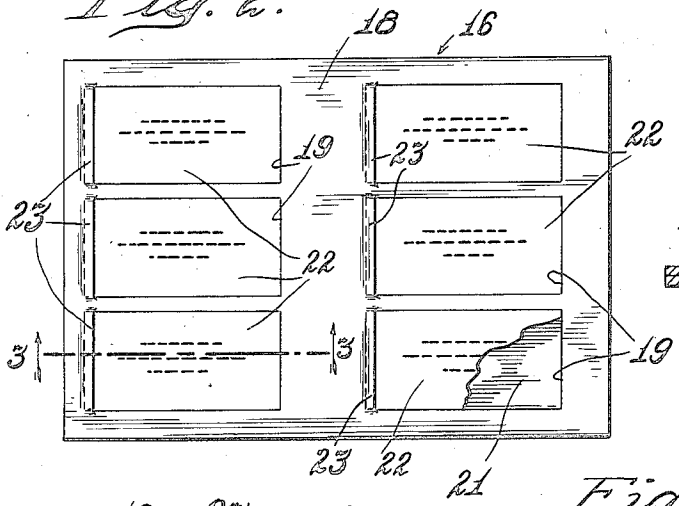

Fig. 4.

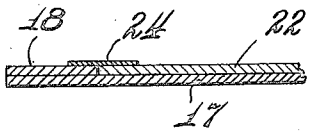

Fig. 3.

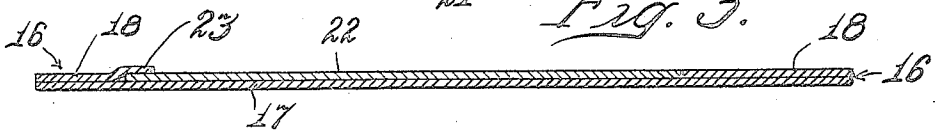

Fig. 5.

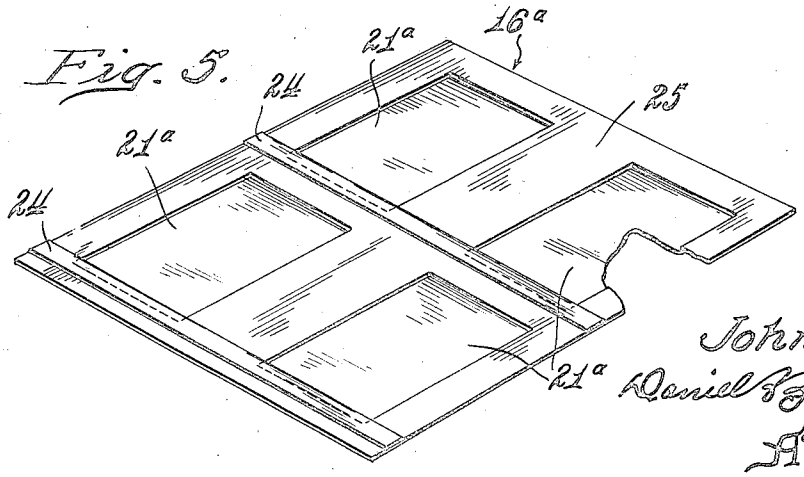

Inventor
John Bauer.
Daniel B. Brennan
Attorney.

Patented Jan. 14, 1936 2,027,625

UNITED STATES PATENT OFFICE

2,027,625

SHEET HOLDER

John Bauer, Chicago, Ill.

Application June 28, 1934, Serial No. 732,884

6 Claims. (Cl. 101—407)

The invention relates to improvements in sheet holders and more particularly to an improved holder to facilitate the feeding and impressing of sheets of small size in a mimeograph printing machine.

An object of the invention is to provide means to adapt a standard mimeograph printing machine to the printing of small sized sheets or cards.

Another object is to provide a holder for small sized sheets with means to retain said sheets firmly during the feeding and impressing operation and allow ready removal thereof after said sheets have been impressed.

Another object is to provide a holder of the character described, with a plurality of recesses each to receive a sheet to be impressed.

Another object is to provide a holder of relatively stiff material to prevent its clinging to the impression cylinder of the machine.

Another object is to provide a holder of the character described which is inexpensive to manufacture and very efficient in use.

The foregoing and such other objects of the invention as will appear hereinafter as the description proceeds, will be more readily understood from a perusal of the following specification, reference being had to the accompanying drawing, in which:

Fig. 1 is a diagrammatic fragmentary sectional view of a mimeograph printing machine, showing the improved sheet holder feeding therethrough.

Fig. 2 is a plane view showing one embodiment of the improved holder.

Fig. 3 is an enlarged sectional view taken on line 3—3 of Fig. 2.

Fig. 4 is a fragmentary sectional view, similar to Fig. 3, showing a modified form of construction.

Fig. 5 is a perspective view showing another form of holder, partially broken away.

Mimeograph printing machines, of known construction, are incapable of handling properly cards or sheets of small size. Specifically, cards or sheets of less than 4" width cannot be fed properly through the machine in proper registration and alignment with the impression on the impression cylinder. Small cards either are not gripped between the impression cylinder and the impression roller of the machine, or if gripped, and fed between said impression cylinder and said roller, often are pulled out of proper alignment hence rendering the card or sheet impressed useless because the matter impressed thereon is not properly positioned. Also small cards or sheets will not engage the usual strippers associated with the impression cylinder and adhere to the cylinder rather than drop therefrom after being impressed. The present invention is directed to the provision of means to adapt a standard type of mimeograph printing machine to impressing cards or sheets of small size without incurring any change in the construction or operation of such machine.

As shown in the accompanying drawing, Fig. 1 illustrates, diagrammatically, a portion of a known type of mimeograph printing machine including a bed plate 11 having an automatic feed roller 12 at the feeding end and an impression roller 13 at the forward or discharge end. Positioned vertically above the impression roller 13, for yieldable engagement therewith, is an impression cylinder 14. Material to be impressed is fed along the bed plate 11, one sheet at a time, either by hand or with the assistance of the automatic feed roller 12, beneath an idler roller 15 and then between the impression cylinder 14 and impression roller 13. Sheets of the proper size are held firmly in proper alignment by the idler roller 15 until after their forward or feeding edge has been gripped between the impression roller and impression cylinder. To feed sheets of a size less than the distance between the idler roller 15 and the impression cylinder 14 necessarily means that the sheet must move along the bed 11 out from beneath the idler roller 15 before its forward edge has entered beneath the impression cylinder with the result that the small sheet either is not drawn beneath the impression cylinder or, if engaged and drawn therebeneath, is wholly free to turn or otherwise move out of alignment with the matter to be impressed thereon by the impression cylinder.

To overcome this difficulty and thus increase the adaptability and utility of a standard type of mimeograph printing machine, a sheet holder 16, shown in one embodiment in Figs. 2 and 3, is used. As illustrated, the holder 16 preferably includes a substantially rectangular bottom sheet 17 of substantially heavy material having a second or top sheet 18 securely joined thereto in any suitable manner, such as for example, by glueing. The top sheet 18 is suitably cut out, as at 19, to provide one or more shallow recesses 21 each of a size to receive snugly a small sheet or card 22 to be impressed. Each recess has suitable means to overlie the forward or feeding edge of the card inserts 22 to prevent them from being snapped out of their respective recesses upon engagement with the idler roller 15 and the impression cylinder 14.

To this end the marginal portion adjacent one edge of each opening in the top sheet **18** preferably is upset to provide a lip **23** to overlie and define a recess to receive the forward or feeding edge of the card or sheet insert **22**.

It readily is apparent that cards or sheets of small size are held firmly in the holder in proper alignment for feeding through the machine because the improved holder **16** is of sufficient size to remain engaged beneath the idler roller **15** until its forward or feeding edge is firmly gripped between the impression cylinder **14** and impression roller **13**.

Fig. 4 illustrates a modified form of structure in which a strip of thin material **24**, such as paper or fabric, is placed over the top sheet **18** in such a position that one margin thereof projects beyond the selected edge of each pocket **21** to overlie the forward or feeding edge of the card or sheet **22**.

The holder **16***a*, shown in Fig. 5, is similar to those forms previously described but, in this form one or more recesses **21***a* preferably are formed by pressing or molding the body of material **25**. Strips **24** are secured to the face of the formed material **25** to overlie the forward edge of each recess and retain the card to be impressed therein.

In use, upon delivery of the holders containing the impressed cards from beneath the impression cylinder, said holders may fall upon the usual receiving tray **26** and stack readily without smearing or blurring the ink on the impressed cards. To remove the impressed cards from the holders, when the ink on the cards is sufficiently dry, the holders need only be held up and the cards shaken out of the recesses.

Although exemplary forms of holders have been illustrated and described, it is to be understood that various modification of detail structure readily suggest themselves and may be utilized without departing from the spirit of the invention or the scope of the appended claims.

I claim:

1. A holder including, in combination, a bottom sheet, a top sheet secured to said bottom sheet, a plurality of openings in said top sheet, said openings providing shallow recesses, and a lip overhanging one edge of each recess.

2. A holder including, in combination, a bottom sheet, a top sheet, a plurality of substantially rectangular openings in said top sheet, said openings providing shallow recesses each adapted to receive a card, and a marginal upset portion overlying one marginal edge of the card in the respective recess.

3. A sheet holder including, in combination, a bottom sheet, a top sheet, a plurality of substantially rectangular openings in said top sheet, said openings providing a plurality of shallow substantially rectangular card receiving recesses in said holder, and upsets in the top sheet one adjacent the corresponding edge of each recess, said upsets providing marginal lips one overlying each recess in the same plane as and spaced from the bottom of each pocket.

4. A holder for cards to be impressed comprising, in combination, a substantially rectangular body of material, one or more shallow recesses formed in one face of said body of material each adapted to receive a card to be impressed, and a pocket opening on one edge of each pocket adapted to retain each card to be impressed in its respective pocket.

5. A holder for sheets to be impressed comprising, in combination, a substantially rectangular body of material, substantially rectangular depressions in one face of said body of material, each of said depressions being adapted to receive a card to be impressed, and a strip of material secured to said body of material adapted to have one margin overlie one end of each depression to retain said cards in place.

6. A device of the character described comprising a substantially rectangular sheet of heavy pliable material, a top sheet of like material secured to one face of said rectangular sheet, said top sheet having a plurality of substantially rectangular openings therein each adapted to receive a card of substantially the same thickness as said top sheet, and an upset portion on the top sheet adjacent one edge of each opening adapted to receive one edge of said card therebeneath.

JOHN BAUER.