(12) INTERNATIONAL APPLICATION PUBLISHED UNDER THE PATENT COOPERATION TREATY (PCT)

(19) World Intellectual Property Organization
International Bureau

(43) International Publication Date
10 May 2007 (10.05.2007)

PCT

(10) International Publication Number
WO 2007/052939 A1

(51) International Patent Classification:
A41F 9/00 (2006.01)

(21) International Application Number:
PCT/KR2006/004483

(22) International Filing Date: 31 October 2006 (31.10.2006)

(25) Filing Language: Korean

(26) Publication Language: English

(30) Priority Data:
20-2005-0031162
3 November 2005 (03.11.2005) KR

(71) Applicant and
(72) Inventor: **CHOI, Beum-Sun** [KR/KR]; (13/1) 934-24 Hogye-dong, Dongan-gu, Anyang-si, Gyeonggi-do 431-080 (KR).

(74) Agents: **LEE, Keon-Cheol** et al.; 209 KICOX Venture Center, 188-5, Guro-dong, Guro-gu, Seoul 152-050 (KR).

(81) Designated States *(unless otherwise indicated, for every kind of national protection available)*: AE, AG, AL, AM, AT, AU, AZ, BA, BB, BG, BR, BW, BY, BZ, CA, CH, CN, CO, CR, CU, CZ, DE, DK, DM, DZ, EC, EE, EG, ES, FI, GB, GD, GE, GH, GM, GT, HN, HR, HU, ID, IL, IN, IS, JP, KE, KG, KM, KN, KP, KZ, LA, LC, LK, LR, LS, LT, LU, LV, LY, MA, MD, MG, MK, MN, MW, MX, MY, MZ, NA, NG, NI, NO, NZ, OM, PG, PH, PL, PT, RO, RS, RU, SC, SD, SE, SG, SK, SL, SM, SV, SY, TJ, TM, TN, TR, TT, TZ, UA, UG, US, UZ, VC, VN, ZA, ZM, ZW.

(84) Designated States *(unless otherwise indicated, for every kind of regional protection available)*: ARIPO (BW, GH, GM, KE, LS, MW, MZ, NA, SD, SL, SZ, TZ, UG, ZM, ZW), Eurasian (AM, AZ, BY, KG, KZ, MD, RU, TJ, TM), European (AT, BE, BG, CH, CY, CZ, DE, DK, EE, ES, FI, FR, GB, GR, HU, IE, IS, IT, LT, LU, LV, MC, NL, PL, PT, RO, SE, SI, SK, TR), OAPI (BF, BJ, CF, CG, CI, CM, GA, GN, GQ, GW, ML, MR, NE, SN, TD, TG).

Published:
— *with international search report*

For two-letter codes and other abbreviations, refer to the "Guidance Notes on Codes and Abbreviations" appearing at the beginning of each regular issue of the PCT Gazette.

(54) **Title:** THE APPARATUS OF FIXING A BELT BUCKLE

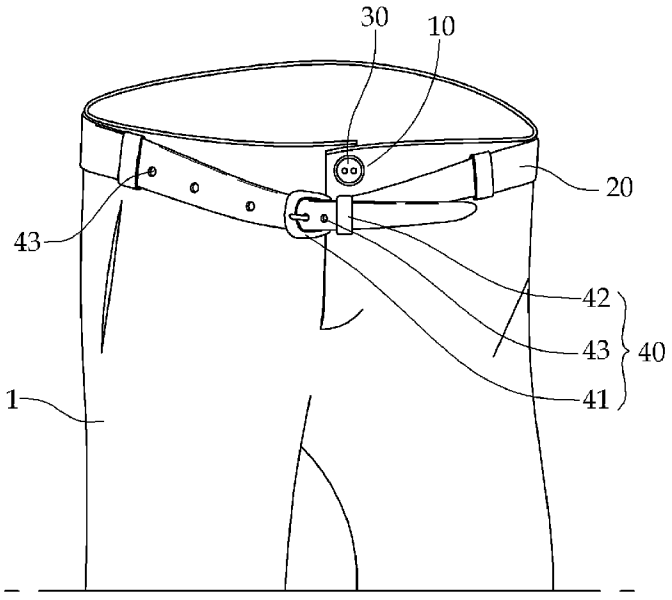

(57) **Abstract:** An apparatus for fixing a belt buckle is dicslosed, in which an insertion engagement groove is formed at a button insertion groove of trousers, and a protrusion engagement part is formed at a waist belt buckle, so that a waist belt buckle is more easily fixed at a button of trousers by pressurizing the protrusion engagement part of the waist belt buckle into the insertion engagement groove of the button. The apparatus comprises an insertion engagement groove which is formed at a button member fixed at one side of trousers; and a protrusion engagement part which is formed at a backside of the buckle of the waist belt.

WO 2007/052939 A1

Description

THE APPARATUS OF FIXING A BELT BUCKLE

Technical Field

[1] The present invention relates to an apparatus for fixing a belt buckle, and in particular to an apparatus for fixing a belt buckle in which an insertion engagement groove is formed at a button insertion groove of trousers, and a protrusion engagement part is formed at a waist belt buckle, so that a waist belt buckle is more easily fixed at a button of trousers by pressurizing the protrusion engagement part of the waist belt buckle into the insertion engagement groove of the button.

[2]

Background Art

[3] When a person wears trousers in a conventional manner, a button is inserted into a button insertion groove, and a waist belt is worn. Here, the waist belt is tightened by pulling and has the same length as the waist size of the trousers. When the waist belt is loosened after meal or the like, the waist belt buckle is sagged for thereby defiling an outer look of the same. So, a user of the waist belt should disadvantageously fix the length of the waist belt so that it is coincided with the size of the waist.

[4] The conventional trousers and waist buckle will be described with reference to Figure 1. Figure 1 is a view illustrating conventional trousers and waist buckle. As shown in Figure 1, a button insertion hole 10 is formed at one side of trousers, and a button member 30 is fixed at the other side of the trousers as corresponding to the button insertion hole 10. The button member 30 formed at the other side of the trousers is inserted into the button insertion hole 10 formed at one side of the trousers. Next, the trousers are provided with a waist belt 20 for preventing the trousers 1 from being falling down. The conventional waist belt 20 comprises an engaging part 41 of a buckle 40, a buckle housing 42, and a fixing protrusion ring part 43. The fixing protrusion ring part 43 is inserted into an engagement hole 43 of the waist belt 2.

[5]

Disclosure of Invention

Technical Problem

[6] Accordingly, it is an object of the present invention to provide an apparatus for fixing a belt buckle which overcomes the problems encountered in the conventional art.

[7] It is another object of the present invention to provide an apparatus for fixing a belt buckle in which an insertion engagement groove is formed at a button insertion groove of trousers, and a protrusion engagement part is formed at a housing of a waist belt

buckle, so that the protrusion engagement part of the waist belt buckle is engaged at a button insertion groove. With the above constructions, even when a user of a waist belt wears a belt in a loosened state, the buckle is not sagged for thereby preventing the outer look from being defiled, so that it is possible to achieve a right and neat wearing state.

[8]

Technical Solution

[9] To achieve the above objects, there is provided an apparatus for fixing a waist belt buckle, comprising an insertion engagement groove which is formed at a button member fixed at one side of trousers; and a protrusion engagement part which is formed at a backside of the buckle of the waist belt, whereby when a person wears trousers and a waist belt, the protrusion engagement part of the buckle is pressurized and engaged at the insertion engagement groove of the button member, so that the buckle of the waist belt is fixed at the button member of the trousers.

[10] In addition, the insertion engagement groove of the button member is formed of a snap type insertion engagement groove, and the protrusion engagement protrusion part is formed of a snap type engagement part, so that the snap type engagement part is engaged with the snap type insertion engagement groove.

[11] The insertion engagement groove of the button member is formed of a material having a magnetic force.

[12]

Advantageous Effects

[13] In the present invention, a button attached to conventional trousers performs its inherent function, and an insertion engagement groove is formed at the button and is engaged with a protrusion engagement part provided at a buckle of a waist belt, so that even when a waist belt is loosened, it is possible to prevent a waist belt or a buckle from being sagged for thereby achieving a right and neat wearing state.

[14]

Brief Description of the Drawings

[15] The present invention will become better understood with reference to the accompanying drawings which are given only by way of illustration and thus are not limitative of the present invention, wherein;

[16] Figure 1 is a view illustrating conventional trousers and waist buckle; and

[17] Figures 2 and 3 are views illustrating an apparatus for fixing a waist belt buckle according to the present invention.

[18]

Best Mode for Carrying Out the Invention

[19] In the preferred embodiment of the present invention, there is provided An apparatus for fixing a waist belt buckle which comprises an insertion engagement groove which is formed at a button member fixed at one side of trousers; and a protrusion engagement part which is formed at a backside of the buckle of the waist belt, whereby when a person wears trousers and a waist belt, the protrusion engagement part of the buckle is pressurized and engaged at the insertion engagement groove of the button member, so that the buckle of the waist belt is fixed at the button member of the trousers.

[20]

Mode for the Invention

[21] The preferred embodiments of the present invention will be described with reference to the accompanying drawings.

[22] Figures 2 and 3 are views illustrating an apparatus for fixing a waist belt buckle according to the present invention.

[23] As shown in Figures 2 and 3, a button insertion hole 10 is formed at one side of trousers, and a button member 300 is fixed at the other side of the trousers corresponding to the button insertion hole 10. An insertion engagement groove 340 is formed at the button member 300. Preferably, the button member 300 is formed of a snap type button. As shown in Figures 2 and 3, the button member 300 comprises a snap type support plate 310 as engaged at an inner side of the trousers through a basic fabric of the trousers 1, a snap type button connection part 320 as extended from the snap type support plate 310, and a snap type button housing 330 as provided at the snap type button connection part 320. The snap type button housing 330 is provided with a snap type insertion engagement groove 340. Preferably, the snap type insertion engagement groove 340 is formed in a circular shape and is provided with an engagement ring 350 along an inner surface of the insertion engagement groove 340.

[24] A buckle 400 is provided at an end of the waist belt 20. A protrusion engagement part 410 is protruded from a backside of the buckle 400. Preferably, the protrusion engagement part 410 corresponds to a circular protrusion-shaped snap type engagement part 410. So, the snap type engagement part 410 provided at a backside of the buckle 400 is pressurized onto the insertion engagement groove 340 of the button member 300, following wearing the waist belt 20, so that the buckle 400 is fixed at the button member 300. More preferably, an inner surface of the insertion engagement groove 340 of the button member 300 may be designed to have a magnetic force. With the above construction, the snap type engagement part 410 of the buckle 400 may be more easily engaged with the insertion engagement groove 340 of the button member 300.

[25] As the present invention may be embodied in several forms without departing from the spirit or essential characteristics thereof, it should also be understood that the above-described examples are not limited by any of the details of the foregoing description, unless otherwise specified, but rather should be construed broadly within its spirit and scope as defined in the appended claims, and therefore all changes and modifications that fall within the meets and bounds of the claims, or equivalences of such meets and bounds are therefore intended to be embraced by the appended claims.

[26]

Industrial Applicability

[27] As described above, in the present invention, a button attached to conventional trousers performs its inherent function, and an insertion engagement groove is formed at the button and is engaged with a protrusion engagement part provided at a buckle of a waist belt, so that even when a waist belt is loosened, it is possible to prevent a waist belt or a buckle from being sagged for thereby achieving a right and neat wearing state.

[28]

Sequence Listing

[29] trousers, buckle, snap, protrusion, waist belt

[30]

Claims

[1] An apparatus for fixing a waist belt buckle, comprising:
an insertion engagement groove which is formed at a button member fixed at one side of trousers; and
a protrusion engagement part which is formed at a backside of the buckle of the waist belt,
whereby when a person wears trousers and a waist belt, the protrusion engagement part of the buckle is pressurized and engaged at the insertion engagement groove of the button member, so that the buckle of the waist belt is fixed at the button member of the trousers.

[2] The apparatus of claim 1, wherein said insertion engagement groove of the button member is formed of a snap type insertion engagement groove, and the protrusion engagement protrusion part is formed of a snap type engagement part, so that the snap type engagement part is engaged with the snap type insertion engagement groove.

[3] The apparatus of either claim 1 or claim 2, wherein said insertion engagement groove of the button member is formed of a material having a magnetic force.

[Fig. 1]

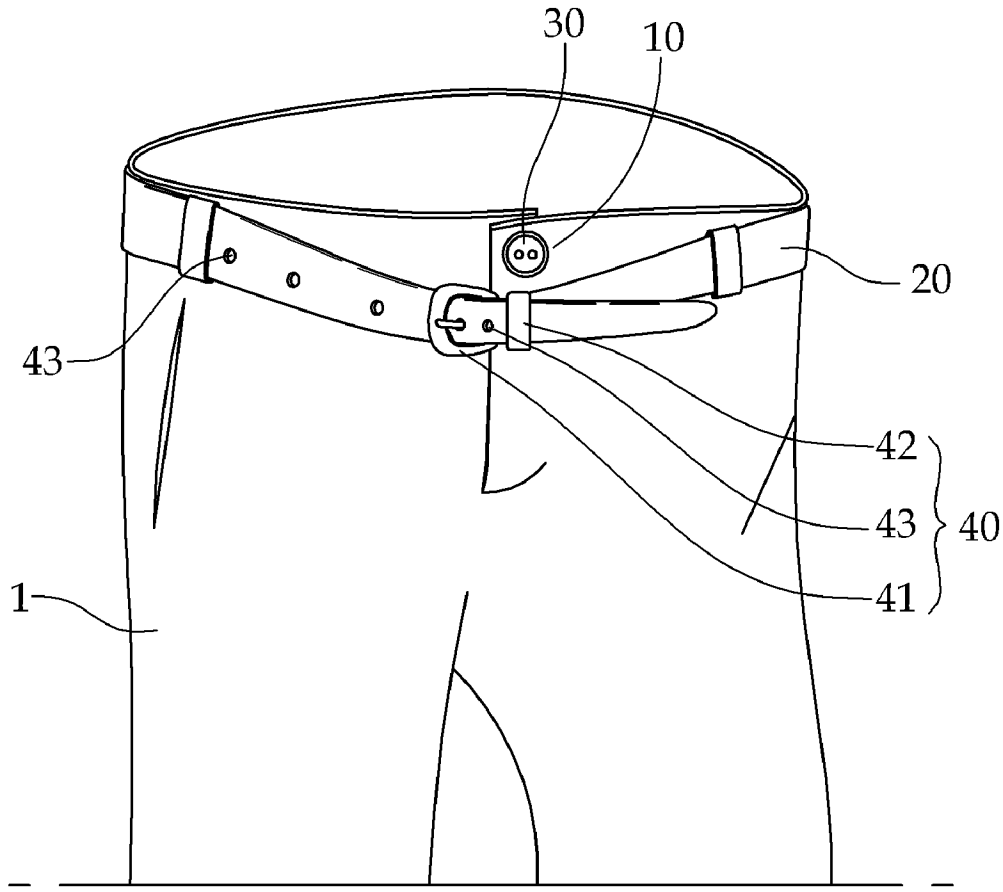

[Fig. 2]

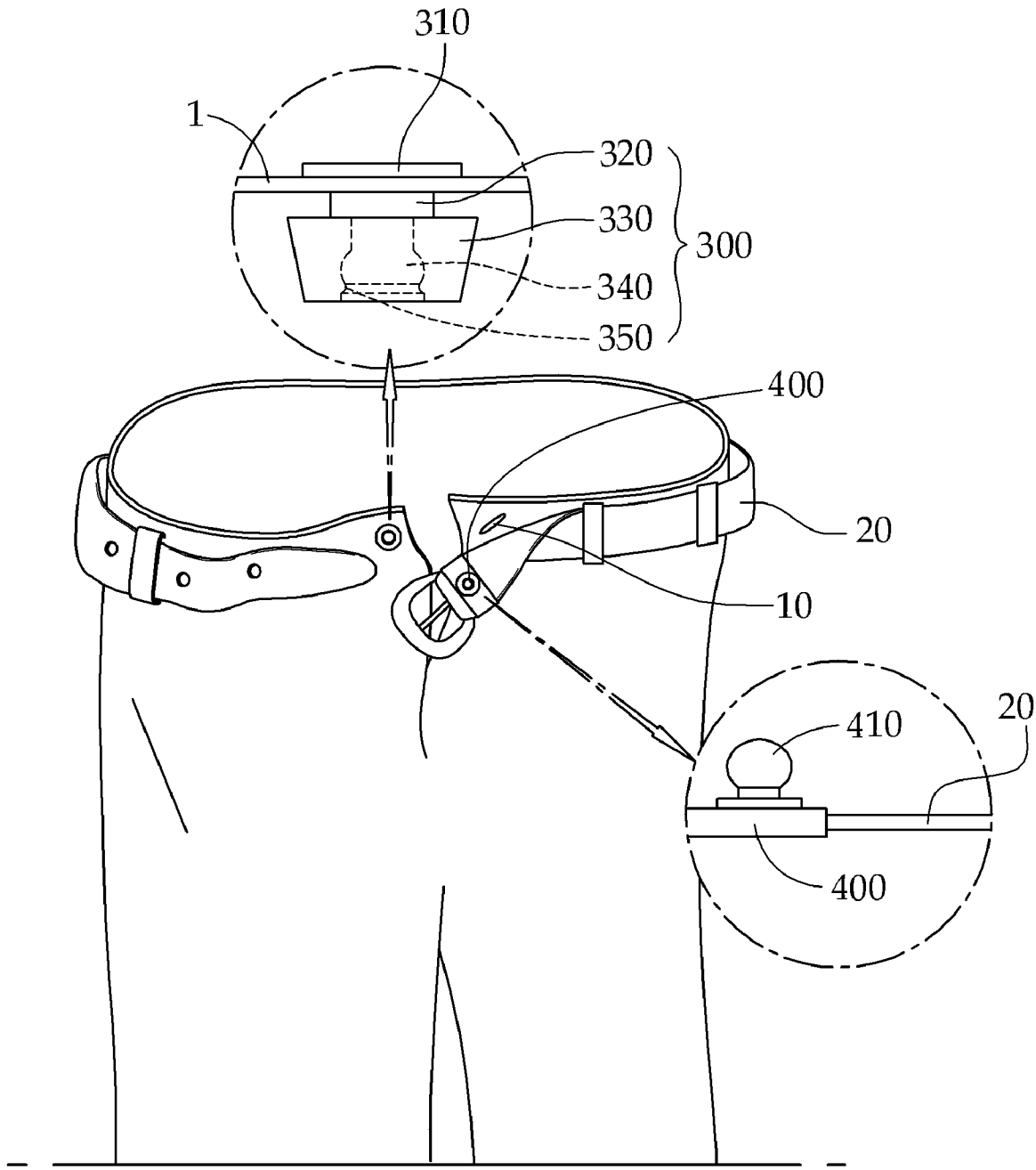

[Fig. 3]

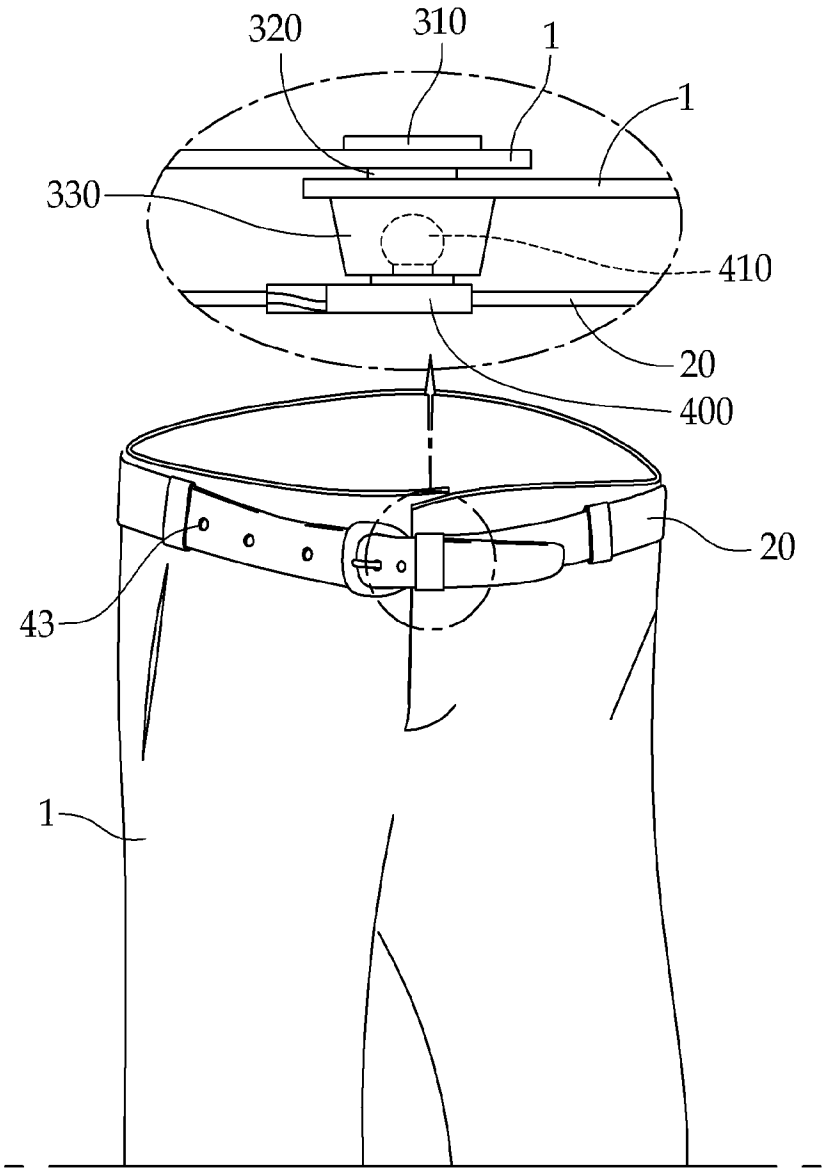

INTERNATIONAL SEARCH REPORT

International application No.
PCT/KR2006/004483

A. CLASSIFICATION OF SUBJECT MATTER

A41F 9/00(2006.01)i

According to International Patent Classification (IPC) or to both national classification and IPC

B. FIELDS SEARCHED

Minimum documentation searched (classification system followed by classification symbols)
IPC 8 : A41F A44B

Documentation searched other than minimum documentation to the extent that such documents are included in the fields searched
Korean Patents and applications for inventions since 1975
Korean Utility models and applications for Utility models since 1975
Japanese Utility models and application for Utility models since 1975

Electronic data base consulted during the intertnational search (name of data base and, where practicable, search terms used)
eKIPASS(KIPO internal) "belt", "fix", "cloth", "groove"

C. DOCUMENTS CONSIDERED TO BE RELEVANT

Category*	Citation of document, with indication, where appropriate, of the relevant passages	Relevant to claim No.
A	EP 1,529,459 A1 (SARL, P.) 11 May 2005 See abstract ; figures 1-6.	1-3
A	US 4,566,158 A (LAU, W.) 28 January 1986 See abstract ; figures 1-8.	1-3
A	JP 2003-13319 A (INTEC KOSAN K.K.)15 January 2003 See abstract ; figures 1-3.	1-3
A	US 6,711,750 B1 (YOO, D.) 30 March 2004 See abstract ; figures 1-12.	1-3

☐ Further documents are listed in the continuation of Box C.

☒ See patent family annex.

* Special categories of cited documents:
"A" document defining the general state of the art which is not considered to be of particular relevance
"E" earlier application or patent but published on or after the international filing date
"L" document which may throw doubts on priority claim(s) or which is cited to establish the publication date of citation or other special reason (as specified)
"O" document referring to an oral disclosure, use, exhibition or other means
"P" document published prior to the international filing date but later than the priority date claimed
"T" later document published after the international filing date or priority date and not in conflict with the application but cited to understand the principle or theory underlying the invention
"X" document of particular relevance; the claimed invention cannot be considered novel or cannot be considered to involve an inventive step when the document is taken alone
"Y" document of particular relevance; the claimed invention cannot be considered to involve an inventive step when the document is combined with one or more other such documents,such combination being obvious to a person skilled in the art
"&" document member of the same patent family

Date of the actual completion of the international search	Date of mailing of the international search report
09 JANUARY 2007 (09.01.2007)	**09 JANUARY 2007 (09.01.2007)**

Name and mailing address of the ISA/KR
Korean Intellectual Property Office
920 Dunsan-dong, Seo-gu, Daejeon 302-701,
Republic of Korea
Facsimile No. 82-42-472-7140

Authorized officer
LEE, Won Jae
Telephone No. 82-42-481-5620

INTERNATIONAL SEARCH REPORT

Information on patent family members

International application No.
PCT/KR2006/004483

Patent document cited in search report	Publication date	Patent family member(s)	Publication date
EP 1,529,459 A1	11-05-2005	FR 2,861,553 A1	06-05-2005
US 4,566,158 A	28-01-1986	GB 2,150,628 B2 GB 2,150,628 A1	25-11-1987 03-07-1985
JP 2003-13319 A	15-01-2003	NONE	
US 6,711,750 B1	30-03-2004	JP 2004-113762 A2	15-04-2004