(12) INTERNATIONAL APPLICATION PUBLISHED UNDER THE PATENT COOPERATION TREATY (PCT)

(19) World Intellectual Property Organization
International Bureau

(43) International Publication Date
17 July 2014 (17.07.2014)

WIPO | PCT

(10) International Publication Number
WO 2014/110276 A1

(51) International Patent Classification:
B23K 26/062 (2014.01) *B23K 26/03* (2006.01)
B23K 26/10 (2006.01)

(21) International Application Number:
PCT/US2014/010902

(22) International Filing Date:
9 January 2014 (09.01.2014)

(25) Filing Language: English

(26) Publication Language: English

(30) Priority Data:
61/751,810 11 January 2013 (11.01.2013) US

(71) Applicant: **ELECTRO SCIENTIFIC INDUSTRIES, INC.** [US/US]; 13900 NW Science Park Drive, Portland, Oregon 97229-5497 (US).

(72) Inventor: **UNRATH, Mark A.**; 2840 SW 66th Avenue, Portland, Oregon 97225 (US).

(74) Agent: **BARKER, Aaron, D.**; Stoel Rives LLP, 201 S. Main Street, Suite 1100, Salt Lake City, Utah 84111 (US).

(81) Designated States *(unless otherwise indicated, for every kind of national protection available)*: AE, AG, AL, AM, AO, AT, AU, AZ, BA, BB, BG, BH, BN, BR, BW, BY, BZ, CA, CH, CL, CN, CO, CR, CU, CZ, DE, DK, DM, DO, DZ, EC, EE, EG, ES, FI, GB, GD, GE, GH, GM, GT, HN, HR, HU, ID, IL, IN, IR, IS, JP, KE, KG, KN, KP, KR, KZ, LA, LC, LK, LR, LS, LT, LU, LY, MA, MD, ME, MG, MK, MN, MW, MX, MY, MZ, NA, NG, NI, NO, NZ, OM, PA, PE, PG, PH, PL, PT, QA, RO, RS, RU, RW, SA, SC, SD, SE, SG, SK, SL, SM, ST, SV, SY, TH, TJ, TM, TN, TR, TT, TZ, UA, UG, US, UZ, VC, VN, ZA, ZM, ZW.

(84) Designated States *(unless otherwise indicated, for every kind of regional protection available)*: ARIPO (BW, GH, GM, KE, LR, LS, MW, MZ, NA, RW, SD, SL, SZ, TZ, UG, ZM, ZW), Eurasian (AM, AZ, BY, KG, KZ, RU, TJ, TM), European (AL, AT, BE, BG, CH, CY, CZ, DE, DK, EE, ES, FI, FR, GB, GR, HR, HU, IE, IS, IT, LT, LU, LV, MC, MK, MT, NL, NO, PL, PT, RO, RS, SE, SI, SK, SM, TR), OAPI (BF, BJ, CF, CG, CI, CM, GA, GN, GQ, GW, KM, ML, MR, NE, SN, TD, TG).

Published:

— *with international search report (Art. 21(3))*

(54) Title: LASER PULSE ENERGY CONTROL SYSTEMS AND METHODS

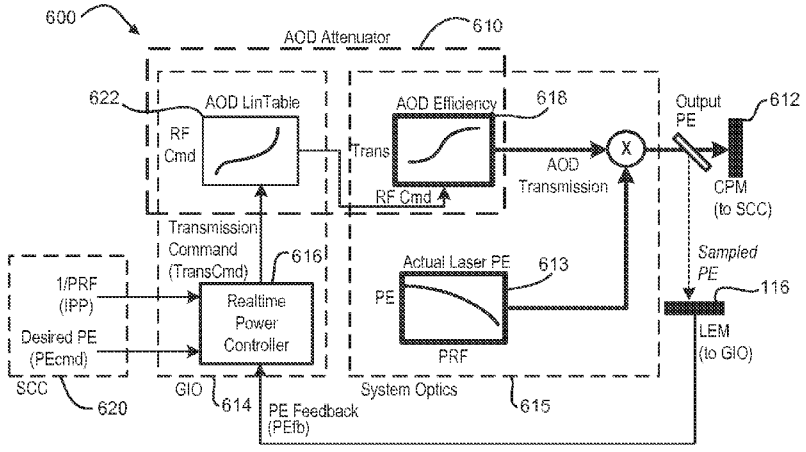

(57) Abstract: Systems and methods provide laser pulse energy control and/or monitoring. An example laser processing apparatus includes a laser system to generate a beam of laser pulses and a pulse energy control system to adjust the pulse energy of each laser pulse in the beam on a pulse-by-pulse basis. The pulse energy control system includes an open loop feedforward control path that selects a pulse energy transmission value for each laser pulse based on a calibrated transmission curve that maps laser pulse energy as a function of pulse repetition frequency. A laser energy monitor measures the laser pulse energy of each laser pulse in the beam of laser pulses. A power control loop may further adjust the pulse energy of one or more laser pulses in the beam of laser pulses based on feedback from the laser energy monitor.

WO 2014/110276 A1

LASER PULSE ENERGY CONTROL SYSTEMS AND METHODS

Related Application

[0001] This application claims the benefit under 35 U.S.C. §119(e) of U.S. Provisional Application No. 61/751,810, filed January 11, 2013, which is hereby incorporated by reference herein in its entirety.

Technical Field

[0002] This disclosure relates generally to laser processing apparatuses and to methods of processing workpieces using the same.

Background Information

[0003] Laser-processing of features (e.g., through-vias, blind vias, trenches, routs, kerfs, and other features) within one or more materials of a workpiece can be sensitive to laser power. In many applications (e.g., in which features are laser-processed by delivering laser pulses onto the workpiece), the speed or efficiency with which a feature is formed, and the quality of the feature ultimately formed, can be very sensitive to the pulse energy of the individual pulses delivered to the workpiece. For example, when laser-processing a workpiece such as a printed circuit board, a flexible printed circuit, or the like, a relatively high pulse energy may be desirable when laser processing (e.g., ablating) an electrically conductive material such as copper, while a relatively lower pulse energy may be desirable when laser processing (e.g., ablating) a dielectric material without inducing heat effects (e.g., due to charring and/or melting) within the dielectric material and without damaging adjacent materials (e.g., copper).

[0004] Conventional methods of controlling or adjusting laser power or pulse energy include attenuation optics (e.g., polarization optics or acousto-optic modulators), or direct control of laser optical output power by varying the pump power to the lasing medium. These conventional approaches have disadvantages including slow speed (e.g., for mechanically-adjusted polarization optics), variation in laser delivery (e.g., in the control of lasing medium pumping or Q-switch timing), or a lack of coordination with other operations of the laser processing apparatus.

Summary of the Disclosure

[0005] Embodiments of the present disclosure, as examples described herein, address the limitations discussed above and other limitations associated with conventional methods of controlling or adjusting laser power or pulse energy.

[0006] In certain embodiments, systems and methods provide laser pulse energy control and/or monitoring. An example laser processing apparatus includes a laser system to generate a beam of laser pulses and a pulse energy control system to adjust the pulse energy of each laser pulse in the beam on a pulse-by-pulse basis. The pulse energy control system includes an open loop feedforward control path that selects a pulse energy transmission value for each laser pulse based on a calibrated transmission curve that maps laser pulse energy as a function of laser pulse repetition frequency. A laser energy monitor measures the laser pulse energy of each laser pulse in the beam of laser pulses. A power control loop may further adjust the pulse energy of one or more laser pulses in the beam of laser pulses based on feedback from the laser energy monitor.

[0007] Additional aspects and advantages will be apparent from the following detailed description of preferred embodiments, which proceeds with reference to the accompanying drawings.

Brief Description of the Drawings

[0008] FIG. 1 schematically illustrates a laser processing apparatus according to one embodiment of the present disclosure.

[0009] FIG. 2 schematically illustrates scan fields associated with various components or systems of the apparatus shown in FIG. 1.

[0010] FIG. 3 and FIG. 4 graphically illustrates patterns of spots created by scanning a beam position relative to a workpiece, according to certain embodiments of the present disclosure.

[0011] FIG. 5 is a chart schematically illustrating one embodiment of a process of forming the pattern of spots shown in FIG. 4.

[0012] FIG. 6 schematically illustrates some components of a laser power control system according to one embodiment.

[0013] FIG. 7 schematically illustrates a laser power control algorithm according to one embodiment.

[0014] FIG. 8 schematically illustrates the progression from a typical laser power curve to a normalized 1/PE (pulse energy) value as a function of pulse period.

[0015] FIG. 9 illustrates a chuck power meter (CPM) reading transient that may be generated in accordance with embodiments of the present disclosure.

[0016] FIG. 10 schematically illustrates pulse synchronization across sequential process segments associated with different pulse periods or pulse repetition frequencies.

[0017] FIG. 11 is a flowchart of an example LET calibration process according to one embodiment.

[0018] FIG. 12 is a flowchart of an example operation sequence that may be implemented according to one embodiment for power control during laser-processing of the workpiece shown in FIG. 1.

Detailed Description of Preferred Embodiments

[0019] Example embodiments are described below with reference to the accompanying drawings. Many different forms and embodiments are possible without deviating from the spirit and teachings of the invention and so the disclosure should not be construed as limited to the example embodiments set forth herein. Rather, these example embodiments are provided so that this disclosure will be thorough and complete, and will convey the scope of the invention to those skilled in the art. In the drawings, the sizes and relative sizes of components may be exaggerated for clarity. The terminology used herein is for the purpose of describing particular example embodiments only and is not intended to be limiting. As used herein, the singular forms “a,” “an” and “the” are intended to include the plural forms as well, unless the context clearly indicates otherwise. It will be further understood that the terms “comprises” and/or “comprising,” when used in this specification, specify the presence of stated features, integers, steps, operations, elements, and/or components, but do not preclude the presence or addition of one or more other features, integers, steps, operations, elements, components, and/or groups thereof. Unless otherwise specified, a range of values, when recited, includes both the upper and lower limits of the range, as well as any sub-ranges therebetween.

[0020] As used herein, “power control” is a generic term used to describe control of the laser output power. Example embodiments described herein, however, measure and control the pulse energy (PE) of a laser pulse. For a given pulse repetition frequency (PRF), the laser power pulse power is equal to PE x PRF. For a given PRF, PE control is equivalent to power control, and the two terms are sometimes used interchangeably. In addition, “PRF” may be specified by its inverse, the pulse period (PP) or the inter-pulse period (IPP). Typically, machine users refer

to PRF, but the power control implementation specifies pulse period. The two terms are therefore interchangeably used in this discussion where appropriate.

[0021] Referring to FIG. 1, a laser processing apparatus, such as laser processing apparatus 100, is configured to form features (e.g., through-vias, blind vias, trenches, routs, kerfs, and other features) within one or more materials of a workpiece 102 by directing a beam 105 of laser pulses along a path P to impinge upon the workpiece 102. Features may be formed by controlling the laser processing apparatus 100 to perform one or more tooling actions (e.g., a percussion drilling action, a trepan drilling action, a skiving action, a routing action, a cutting action, and other actions), wherein each tooling action may include one or more steps. As illustrated, the laser processing apparatus 100 may include a laser system 104, a chuck 106, a workpiece positioning system 108, a beam positioning system 110, and a beam modulation system 112. Although not illustrated, the laser processing apparatus 100 may further include one or more supplemental systems (e.g., optics, mirrors, beam splitters, beam expanders, and/or beam collimators) configured to shape, expand, focus, reflect, and/or collimate the beam 105 of laser pulses at any point along the path P. In one embodiment, a set of one or more supplemental systems may be referred to as an "optics train."

[0022] In one embodiment, and as will be discussed in greater detail herein, the operation of one or more or all of the workpiece positioning system 108, beam positioning system 110, and beam modulation system 112 may be controlled to change the position of where the beam 105 of laser pulses impinges upon the workpiece 102 (i.e., the beam position relative to the workpiece 102). In another embodiment, and as will also be discussed in greater detail herein, the operation of one or more or all of the workpiece positioning system 108, beam positioning system 110, and beam modulation system 112 may be controlled to change the velocity and/or acceleration with which the beam position changes relative to the workpiece 102.

[0023] The laser system 104 may be configured to generate the beam 105 of laser pulses. Laser pulses within the beam 105 may, for example, have a wavelength in the infrared, visible, or ultraviolet spectrums. For example, laser pulses within the beam 105 may have a wavelength such as 1064 nm, 532 nm, 355 nm, 266 nm, and the like. Laser pulses within the beam 105 are may generally generated at a PRF in a range from about 20 kHz to about 2000 kHz. It will be

appreciated, however, that the PRF may be less than 20 kHz or greater than 2000 kHz.

[0024] The chuck 106 may be provided as any chuck capable of suitably or beneficially supporting the workpiece 102. In one embodiment, the chuck 106 can be provided as a vacuum chuck, an electrostatic chuck, a mechanical chuck, or the like or a combination thereof.

[0025] The workpiece positioning system 108 is configured to translate the chuck 106, which supports the workpiece 102, along one or more directions parallel to an X-axis, Y-axis, and/or Z-axis (where the Z-axis is at least substantially perpendicular to the surface of the chuck 106, and where the X-axis, Y-axis, and Z-axis are mutually orthogonal to each other), to rotate the chuck 106 about one or more of the X-axis, Y-axis, and/or Z-axiss, or the like or a combination thereof. In one embodiment, the workpiece positioning system 108 may include one or more stages configured to move the chuck as discussed above. When a workpiece 102 is supported by the chuck 106, the workpiece positioning system 108 can be operated to move or scan the workpiece 102 (e.g., along the X-axis and Y-axis) within a first scan field (e.g., first scan field 200, as shown in FIG. 2) relative to the path P. In one embodiment, the workpiece positioning system 108 can be operated to scan the workpiece 102 in any direction along the X-axis for a distance in a range from about 400 to about 700 mm (e.g., about 635 mm), in any direction along the Y-axis for a distance in a range from about 400 mm to about 700 mm (e.g., about 533 mm), or a combination thereof.

[0026] The beam positioning system 110 is configured to deflect, reflect, refract, diffract, or the like, or a combination thereof, the beam 105 of laser pulses to scan the beam position within a second scan field (e.g., second scan field 202, as shown in FIG. 2) relative to the workpiece 102. In one embodiment, the beam positioning system 110 can be operated to scan the beam position in any direction along the X-axis for a distance in a range from about 1 mm to about 50 mm (e.g., about 30 mm), in any direction along the Y-axis for a distance in a range from about 1 mm to about 50 mm (e.g., about 30 mm), or a combination thereof. Generally, operation of the beam positioning system 110 can be controlled to scan the beam position relative to the workpiece 102 at a velocity and/or acceleration that is greater than that by which the workpiece positioning system 108 can scan the workpiece 102 within the first scan field 200. In the illustrated embodiment, the beam positioning system 110

includes a pair of galvanometer (galvo)-based mirrors 110a and 110b, disposed within the path P. Each mirror 110a and 110b is configured to be rotated (e.g., about the X-axis or Y- axis), thereby deflecting the path P and scanning the beam position within the second scan field 202. It will be appreciated, however, that the beam positioning system 110 may be configured in any other suitable or beneficial manner.

[0027] The beam modulation system 112 is configured to deflect, reflect, refract, diffract, or the like, or a combination thereof, the beam of laser pulses to scan the beam position within a third scan field (e.g., third scan field 204, as shown in FIG. 2) relative to the workpiece 102. In one embodiment, the beam modulation system 110 can be operated to scan the beam position in any direction along the X-axis for a distance in a range from about 0.05 mm to about 0.2 mm (e.g., about 0.1 mm), in any direction along the Y-axis for a distance in a range from about 0.05 mm to about 0.2 mm (e.g., about 0.1 mm), or a combination thereof. Those persons skilled in the art will recognize that these ranges are provided by way of example and that the beam position may be scanned within smaller or larger ranges. Generally, operation of the beam modulation system 112 can be controlled to scan the beam position relative to the workpiece 102 at a velocity and/or acceleration that is greater than that by which the beam positioning system 110 can scan beam position within the second scan field. In one embodiment, the beam modulation system 112 includes a single acousto-optic deflector (AOD) configured to deflect the beam 105 of laser pulses to scan the beam position within the third scan field 204 along the X-axis and Y-axis. In another embodiment, the beam modulation system 112 includes two AODs, wherein a first AOD is configured to deflect the beam 105 of laser pulses and scan the beam position within the third scan field 204 along the X-axis and a second AOD is configured to deflect the beam 105 of laser pulses and scan the beam position within the third scan field 204 along the Y-axis. It will be appreciated, however, that the beam modulation system 112 may be configured in any other suitable or beneficial manner. For example, the beam modulation system 112 may include one or more acousto-optic modulators (AOMs), electro-optic deflectors (EODs), electro-optic modulators (EOMs), or the like or a combination thereof in addition to, or as a substitute for, an AOD.

[0028] The laser processing apparatus 100 may further include a system controller 114 communicatively coupled to the workpiece positioning system 108, the beam positioning system 110, the beam modulation system 112, and the laser

system 104. The system controller is configured to control the aforementioned operation of one or more or all of these systems (the workpiece positioning system 108, the beam positioning system 110, the beam modulation system 112, and/or the laser system 104) to form features (e.g., through-vias, blind vias, trenches, routs, kerfs, and other features) within the workpiece 102. In one embodiment, the system controller 114 can control an operation of the laser system 104 to change the PRF (e.g., within a range from about 20 kHz to about 2000 kHz) of pulses generated by the laser system 104.

[0029] In one embodiment, the system controller 114 may control an operation of the beam modulation system 112 to scan the beam position relative to the workpiece 102 and form a "high feature-density region" within the workpiece 102 (e.g., a region containing features separated by a pitch of less than or equal to 500 μm, or thereabout). The system controller 114 may further control an operation of the beam positioning system 110 and/or the workpiece positioning system 108 while forming the high feature-density region.

[0030] In another embodiment, the system controller 114 may control an operation of the beam positioning system 110 to scan the beam position relative to the workpiece 102 and form a "medium feature-density region" within the workpiece 102 within the workpiece 102 (e.g., a region containing features separated by a pitch greater than 500 μm, or thereabout, such as about 1000 μm). The system controller 114 may further control an operation of the beam modulation system 112 and/or the workpiece positioning system 108 while forming the medium feature-density region.

[0031] In yet another embodiment, the system controller 114 may control an operation of the beam positioning system 110 and further control an operation of the beam modulation system 112 in a coordinated manner to overcome high-speed velocity limitations, small-area positioning errors, and bandwidth limitations of the beam positioning system 110. For example, if the laser processing apparatus 100 did not include the beam modulation system 112, the beam positioning system 110 could be controlled to scan the beam position relative to the workpiece 102 such that laser pulses within the beam sequentially impinge upon the workpiece 102 to form a rounded pattern of spots as shown in FIG. 3 (as shown, the circle-shaped pattern of spots has a maximum width of about 600 μm). By coordinating operation of the beam modulation system 112 with the beam positioning system 110, however, the laser processing apparatus 100 can be configured to form a square-shaped pattern

of spots as shown in FIG. 4 (as shown, the square-shaped pattern of spots has a dimension of about 600 μm x about 600 μm).

[0032] In one embodiment, and with reference to FIG. 5, the pattern of spots shown in FIG. 4 can be formed by controlling the beam positioning system 110 to scan the beam position within the second scan field 202 along a line such as line 500, and the beam modulation system 112 can be controlled to further scan the beam position within the third scan field 204 (which is centered at the end of the line 500) along a direction (e.g., indicated by line 502, centered within the third scan field 204) such that laser pulses sequentially impinge upon the workpiece 102 to form a square-shaped pattern of spots 504 (e.g., such as that shown in FIG. 4). By applying the example process as discussed above with respect to FIG. 5, the beam position can be scanned over the workpiece at a rate of about 5 meters per second (m/s). It will be appreciated, however, that operation of the operation of the beam modulation system 112 with the beam positioning system 110 can be coordinated in any manner to form any suitable or beneficial pattern of spots on the workpiece 102.

[0033] Generally, the system controller 114 can include operating logic (not shown) that defines various control functions, and may be in the form of dedicated hardware, such as a hardwired state machine, a processor executing programming instructions, and/or a different form as would occur to those skilled in the art. Operating logic may include digital circuitry, analog circuitry, software, or a hybrid combination of any of these types. In one embodiment, the system controller 114 may include a processor such as a programmable microcontroller, microprocessor, or other processor that can include one or more processing units arranged to execute instructions stored in memory in accordance with the operating logic. Memory (e.g., computer-readable medium) can include one or more types including semiconductor, magnetic, and/or optical varieties, and/or may be of a volatile and/or nonvolatile variety. In one embodiment, memory stores instructions that can be executed by the operating logic. Alternatively or additionally, memory may store data that is manipulated by the operating logic. In one arrangement, operating logic and memory are included in a controller/processor form of operating logic that manages and controls operational aspects the workpiece positioning system 108, the beam positioning system 110 and/or the beam modulation system 112, although in other arrangements they may be separate.

[0034] As described herein, the laser processing apparatus 100 is configured to enable coordinated operation of the beam positioning system 110 and the beam modulation system 112 to form features at high speed and with high positional accuracy. In other embodiments, and as described below, the laser processing apparatus 100 can further include a laser power control (LPC) system having, for example, the beam modulation system 112 and the system controller 114, as well as other systems such as a laser energy monitor (LEM) 116, and other components, systems and subsystems as will be described in greater detail below. Generally, the LPC system may be configured to measure the pulse energy of individual laser pulses (e.g., for quality and control purposes), control the pulse energy of individual laser pulses, facilitate rapid changes to pulse energy and PRF, coordinate the pulse energy control of individual laser pulses with beam position, coordinate generation and modulation of the laser pulses, or the like or a combination thereof.

A. Pulse Energy Measurement

[0035] To measure the pulse energy of individual laser pulses, the laser processing apparatus 100 may further include the aforementioned LEM 116 and a beam splitting element 118 (e.g., a partially transmissive mirror, a diffractive beam splitter, or the like or a combination thereof). The beam splitting element 118 is disposed within the path P between the beam positioning system 110 and the beam modulation system 112, and is oriented or otherwise configured to transmit a portion (e.g., in a range from about 1% to about 2% of the energy) of each pulse within the beam 105 and reflect the remaining portion of each pulse within the beam 105 along the path P toward the workpiece 102. The portion of the beam 105 that is transmitted through the beam splitting element 118 can be referred to as a sampling beam 119.

[0036] In one embodiment, the LEM 116 is configured to measure the pulse energy of each laser pulse within the sampling beam 119 by integrating power of each individual laser pulse within the sampling beam 119. To integrate the power of each individual laser pulse, the LEM 116 may include a photodetector (e.g., a photodiode, not shown, configured to be impinged by pulses within the sampling beam 119), as well as one or more high speed amplifiers, an integrator, and an analog-to-digital converter (ADC). The photodiode may be configured to convert an impinging laser pulse into an electrical current. The electrical current may then be amplified and/or filtered by high speed amplifiers. The integrator (e.g., a resettable

integrator) then integrates the amplified and/or filtered electrical current to create a signal that is proportional to total pulse energy of the impinged laser pulse. The integrator can be reset (e.g., under control of the system controller 114) just before a laser pulse impinges upon the photodiode to keep the integrator within a valid voltage range.

[0037] In certain embodiments, the ADC then reads the output of the integrator twice: a first ADC reading may be performed after the integrator is reset, but before the laser pulse impinges upon the photodiode; and a second ADC reading may then be performed after the laser pulse impinges upon the photodiode. In one embodiment, the delay between the two ADC readings may be fixed (e.g., based on the laser pulse width, the bandwidth of any conditioning amplifiers, or the like or a combination thereof). In another embodiment, the delay between the two ADC readings may be variable to account for changes in pulse width as a function of PRF. For any particular pulse within the sampling beam 119, the difference between the two ADC readings may be scaled according to the photodiode and electrical amplification gain and can be interpreted to represent (e.g., as "PE data") the pulse energy pulse energy (e.g., given in μJ) of the remaining portion of the corresponding laser pulse that will ultimately impinge upon the workpiece 102. In one embodiment, the ADC may read the integrator output a third time (e.g., after the second ADC reading) to estimate the optical or electronic bias input to the integrator. This estimated bias may be subtracted from the measured pulse energy to improve robustness against thermal variations in electrical bias, or the effects of ambient light on the photodetector.

[0038] It will be appreciated that the design of the amplifiers preceding the ADC can affect the performance of the LEM 116, and that design tradeoffs can be made between bandwidth (settling time), noise, and gain. In order to convert the pulse energy reading at pulse repetition rates in a range from about 20 kHz to about 200 kHz, the amplifiers preceding the ADC can be designed such that the output of the integrator settles to within the desired pulse energy conversion tolerance within the pulse period time (i.e., within 1/PRF). By measuring pulse energy using the LEM 116 as described above, the pulse energy of each individual laser pulse within the sampling beam 119 can be measured, rather than the average power of a series of laser pulses sequentially impinging upon the photodiode. Measuring the pulse energy of each individual pulse, the pulse energy of individual laser pulses can also

be controlled on a pulse-by-pulse basis, and errors in the pulse energy of laser pulses ultimately delivered to the workpiece 102 can be corrected on a pulse-by-pulse basis.

B. Pulse Energy Control

[0039] Control of the pulse energy for individual pulses can be implemented using the beam modulation system 112. In an embodiment in which the beam modulation system 112 includes an acousto-optic (AO) device (e.g., an AOD, an AOM), the fraction of the process laser beam power transmitted through the AO device can be controlled by varying the level of radio frequency (RF) power applied to the AO device. The pulse energy of individual laser pulses may be controlled by suitably or beneficially controlling the RF power applied to the AO device on a pulse-by-pulse basis, during the laser-processing process. AO devices such as AODs and AOMs have nonlinear transmission characteristics (vs applied RF power). Accordingly, it may be desirable to map out the nonlinear transmission characteristics of such AO devices to linearize their transmission response. In another embodiment, the beam modulation system 112 includes an electro-optic (EO) device (e.g., an EOD, an EOM). For example, an EOM may be used to vary the fraction of the process laser beam power transmitted to the workpiece 102.

[0040] Regardless of the specific device used to control the pulse energy of laser pulses within the beam 105, the device used should be fast enough to operate on a pulse-by-pulse basis, which may require update rates of about 20 kHz to about 2000 kHz. By controlling the pulse energy of individual laser pulses on a pulse-by-pulse basis, the laser system 104 can be "free-run" at a constant PRF and the pulse energy of any laser pulse generated by the laser system 104 can be controlled (e.g., partially attenuated or completely attenuated so as to be "blanked" to zero power) by the beam modulation system 112. Blanking laser pulses can improve the stability of the laser system 104 (e.g., in terms of pointing, power, and/or beam quality), which can be affected by thermal variations within the laser system 104 if operation of the laser system 104 is controlled to start and stop generating the laser pulses.

C. Pulse Energy Calibration

[0041] As discussed above, the laser processing apparatus 100 can be configured to change the pulse energy of individual laser pulses generated by the laser system 104 on a pulse-by-pulse basis, and can change the PRF with which the laser pulses are generated. In one embodiment, the laser processing apparatus 100

can be configured to change the pulse energy and/or PRF very rapidly (e.g., within one inter-pulse period, IPP, or within a few inter-pulse periods, wherein an inter-pulse period corresponds to 1/PRF). In another embodiment, the pulse energy and PRF can be changed simultaneously. Calibration of the pulse energy as a function of PRF may be useful when varying PRF and/or pulse energy. For example, a particular tooling action may be performed by delivering laser pulses to the workpiece 102 at a relatively high pulse energy and at a relatively low PRF in one step and then delivering laser pulses to the workpiece 102 at a relatively low pulse energy and at a relatively high PRF in a subsequent step. Relying on feedback control of the pulse energy output may be too slow, since many pulses are required to allow a controller to properly adjust the transmission to achieve the desired pulse energy setpoint. By implementing an open loop feedforward control path (supported by the pulse energy vs PRF mapping), pulse energy changes can be rapidly achieved without relying on the slower feedback control path. This can be accomplished by mapping the relation between pulse energy vs PRF before processing begins. Since the characteristics of the laser can change over time, this mapping may be refreshed periodically – e.g., before processing each workpiece.

D. Coordination of Pulse Energy Control with Beam Position

[0042] According to embodiments disclosed herein, pulse energy measurement and pulse energy control may be used to coordinate the pulse energy of a particular laser pulse delivered to a workpiece 102 with the beam position of the particular laser pulse relative to the workpiece 102. In one embodiment, this coordination can be achieved by dividing laser processing commands (e.g., issued from the system controller 114 to one or more of the laser system 104, the workpiece position system 108, the beam positioning system 110, and/or the beam modulation system 112) into a series of separate “process segments” that each include information describing the beam position, pulse energy setpoints for laser pulses, or the like, or a combination thereof. Accordingly, the system controller 114 may include a segment processing subsystem configured to filter, divide, process or otherwise convert information contained in each “process segment” into beam position commands and laser pulse energy commands. The beam position commands can be executed through a beam position control subsystem of the system controller 114, and the laser pulse energy commands may be executed by the laser power control subsystem.

[0043] In one embodiment, the segment processing subsystem and the laser power control system may each include a realtime controller. When beam position commands are delivered from the beam position control subsystem of the system controller 114 to one or more of the workpiece positioning system 108, beam positioning system 110 and beam modulation system 112, the operations of one or more of these components can be controlled to control the location of the beam position relative to the workpiece 102. When laser pulse energy commands are delivered from the laser power control system of the system controller 114 to the laser power control system one or more of the laser system 104, the workpiece positioning system 108, beam positioning system 110 and beam modulation system 112, the operations of one or more of these components can be controlled to control the location of the beam position relative to the workpiece 102. Appropriate synchronization time delays are included in certain embodiments to properly synchronize the generation of laser pulses with beam position.

[0044] In one embodiment, a synchronization process is used to synchronize delivery of a series of consecutive laser pulses within the beam 105 (i.e., a "laser pulse train") to the workpiece 102 with the beam position relative to the workpiece 102. Laser pulses within a common laser pulse train may have the same pulse energy (at least substantially) and be temporally spaced apart from each other (at least substantially) by the inter-pulse period (also referred to herein simply as a "pulse period") so that a laser pulse train may be characterized by a uniform (at least substantially) PRF. A process segment may start at an arbitrary time, and may not necessarily be synchronized to the existing pulse train generated by the laser system 104 (e.g., based on characteristics of the laser system 104 itself or based on external control by the system controller 114). A process segment is generally associated with a desired laser PRF and beam velocity in order to maintain a desired spacing of beam positions at the workpiece 102 ("bite size"). Laser pulse trains may be generated internally within the laser system 104, or external from the laser system 104. The time duration of a process segment can be designed such that an integer number of laser pulses is emitted, with the first and last laser pulse emitted at a desired workpiece location (within some acceptable tolerance, for example, < 5%-25% of the spot diameter). Therefore, in certain embodiments, the first laser pulse (in time) is synchronized relative to the start of a process segment.

[0045] In one embodiment, a first laser pulse is synchronized relative to the start of a process segment by modifying a laser pulse command train such that a valid laser pulse is issued at the correct time relative to the start of the process segment. It will be appreciated that many lasers generate laser pulses at a minimum PRF to avoid damaging the laser system 104 due to excessively large pulse energy (which is generally proportional to the inter-pulse period). To avoid an undesirably large pulse period, the start of the laser pulse train for a new process segment (at the desired PRF for that process segment) can be delayed relative to the end of a previously-generated pulse train such that one inter-pulse period is inserted between the two sequentially generated laser pulse trains, wherein the inserted inter-pulse period is smaller than an undesirably large inter-pulse period associated with an excessively large pulse energy. The above-described process of delaying a new process segment can be herein referred to as "laser pulse train resynchronization." Laser pulse train resynchronization can occur during a period when the pulse energy of a laser pulse is blanked as described above (e.g., which may typically occur when the beam position moves from a processed feature to another region on the workpiece where a new feature is to be formed, herein referred to as an "inter-feature move"). During this resynchronization period, the laser pulse energy is attenuated to zero or close to zero. In another embodiment, for example, in which the laser pulse train is externally generated, the time period between process segments may be adjusted to synchronize laser pulse and process segment timing.

E. Coordination of Beam Modulation with Pulse Generation

[0046] According to embodiments disclosed herein, AO device RF commands (amplitude and frequency) may be synchronized with the laser pulse train incident to the beam modulation system 112. The command update timing of AO device RF waveforms may be arbitrary relative to laser pulses generated by the laser system 104. In some embodiments, it is desirable for the acoustic wave within the AO crystal (generated by the applied RF command) to contain no transients when the laser pulse passes through the AO crystal. Such transients may distort the amplitude or wavefront of the laser pulse, and deleteriously affect the quality of laser-processing at the workpiece 102. To avoid such transients, the generation of laser pulses by the laser system 104 and modulation of the generated laser pulses within the AO device of the beam modulation system 112 can be synchronized. In one implementation, the AO device RF commands can be held constant for a

configurable time period within a temporal envelope surrounding each laser pulse. This allows AO device RF commands to be independently generated, without regard to the details of timing of laser pulse generation. In one embodiment, synchronization of the generating and modulating of laser pulses may occur directly between controllers (not shown) associated with the laser system 104 and the beam modulation system 112.

F. Example Laser Power Control Systems

[0047] Having described example embodiments of associated with measuring the pulse energy of individual laser pulses (e.g., for quality and control purposes), controlling the pulse energy of individual laser pulses to facilitate rapid changes to pulse energy and PRF, coordinating the pulse energy control of individual laser pulses with beam position, and coordinating generation and modulation of the laser pulses, example embodiments of the laser power control system 600, and of its operation, will now be discussed with respect to FIGS. 6 and 7. In the example embodiments discussed with respect to FIGS. 6 and 7, the aforementioned beam modulation system 112 will be provided as an AOD device (e.g., configured to deflect the beam 105 of laser pulses to scan the beam position within the third scan field 204 along one or both of the X-axis and Y-axis), and will hereinafter be referred to simply as an "AOD".

[0048] Referring to FIGS. 6 and 7, the example laser power control system 600 shown in FIG. 6 includes an AOD power and control linearization module 614 and system optics 615. The system optics 615 may include, for example the laser system 104 shown in FIG. 1 and AOD optics 711 shown in FIG. 7. A laser pulse energy table, or simply laser energy table (LET) 710, describes available values of pulse energy at the workpiece 102 vs. PRF. The LET 710 can be calibrated before processing the workpiece 102 to model the performance of the laser system 104 and any of the supplemental systems. An AOD attenuator 610 implements calibrated optical power attenuation by varying the transmission of the AOD optics 711. The aforementioned LEM 116 and a chuck power meter (CPM) 612, also included within the laser power control system 600, can provide feedback to calibrate and control the power of individual laser pulses delivered to the workpiece 102 through a general input/output (IO) controller (GIO) (e.g., a realtime general IO controller). The GIO may be implemented as part of the system controller 114 shown in FIG. 1, or may be separate. In this example, the GIO includes an AOD control and linearization

module 614 (shown in FIGS 6 and 7) and an optional power control loop (PCL) 712 (shown in FIG. 7), among other components. As shown in FIG. 6, the AOD control and linearization module 614 includes a realtime power controller 616 and an AOD linearization table 622.

[0049] During laser-processing to form features within the workpiece 102, power control components such as the LET 710, AOD Attenuator 610, LEM 116, CPM 612, and the power controller 616 can coordinate realtime power control and monitoring. The LET 710 is used to calculate a nominal AOD transmission appropriate for a given pulse energy (PE) and PRF setpoint. The LEM 116 and/or CPM 612 verify the power of laser pulses delivered to the workpiece 102 resulting from the applied AOD transmission. When adequately calibrated, the LET 710 and AOD attenuator 610 allow the power controller 616 to implement open loop control of laser pulse energy on a pulse-by-pulse basis, if the laser power of laser pulses generated by the laser system 104 (also referred to herein as "laser head output power") remains (at least substantially) stable between periodic LET calibration and AOD calibration updates. In certain embodiments, the PCL 712 adjusts for short-term laser power fluctuations from the laser system 104 by continuously adjusting the AOD transmission command to maintain the commanded PE despite any variations in the raw laser pulse energy output. The operation and calibration of the aforementioned power control components are described below.

1. Laser Pulse Energy Table (LET)

[0050] In the laser processing apparatus 100, the laser head output pulse energy is a function of PRF, and this function varies over time as the laser ages. The LET 710 represents the laser pulse energy available at the workpiece 102 (also referred to herein as the "work PE" or "workpiece PE"), at maximum AOD transmission, for any PRF. The LET 710 is used to calculate the best estimate of the AOD transmission required to provide a requested laser workpiece 102 PE at a desired PRF. The LET 710 describes the actual laser PE 613 (i.e., the laser PE generated by the laser system 104 shown in FIG. 1) available at the workpiece 102 (PElaser). This differs from (and may be higher than) the specified system laser power, which is used to guide setup of the laser-processing. The specified system laser power limits can be described by a separate power limit table; this table is predefined for a given system design (laser and optical train configuration) and is neither calibrated nor updated.

[0051] The desired AOD transmission equals PEcmd/PElaser, where PEcmd is the selected or commanded PE and PElaser is the actual laser PE (or true laser PE) at the workpiece. If the LET 710 provides 1/PE laser as a function of PRF, the desired transmission can be calculated by a simple multiply, as shown in FIG. 7. The scaling and implementation of the LET 710 table can be further simplified by separating out a fixed scale factor (Kpwr) 714, such that the LET 710 lookup table contains an attenuation factor (≤ 1) as a function of pulse period (1/PRF). The product of Kpwr 714 and the LET 710 table value then results in the transmission required to produce the requested PE/PRF combination.

[0052] LET entries are generated from laser power data. FIG. 8 illustrates the progression from example laser power curves (e.g., in terms of laser power and PE vs PRF), to PE as a function of pulse period, to a normalized 1/PE value as a function of pulse period. The scaling factor Kpwr 714 is calculated to provide the correct transmission at the PRF containing the lowest laser PE (i.e., the maximum transmission case). At all other pulse periods the laser PE is higher, the LET entries are < 1.0, and the transmission can be scaled down appropriately.

[0053] In one embodiment, the LET 710 may be used to implement adaptive velocity processing, in which the velocity with which the beam position is scanned relative to the workpiece 102 and the laser PRF can be adjusted (e.g., automatically), to maintain a desired bite size and pulse energy as the laser power of laser pulses generated by the laser system 104 drops over time. Adaptive velocity processing can also allow the higher power of a relatively fresh laser system 104 to be maximally utilized to enhance throughput over the life of the laser.

2. AOD Attenuator

[0054] The AOD provides for both beam deflection and power control, through attenuation of the optical transmission of the deflected beam 105. As discussed above, the transmission can be adjusted by varying the RF power level applied the AOD cell. The variation in transmission (i.e., diffraction efficiency or AOD efficiency of the transmission 618) of the AOD is a nonlinear function of the applied RF power and frequency. This nonlinear relationship is calibrated to linearize the actual transmission vs. commanded transmission.

3. LEM and CPM

[0055] As discussed above, the LEM 116 can read laser pulse energy (PE) values for each individual laser pulse, and generate PE data therefrom. The PE data

is synchronized to a laser Q-switch command of the laser system 104, which runs at a specified PRF, asynchronous to a digital signal processor (DSP) sampling cycle. LEM readings are corrected for offset and scale factor to convert them into PE data. According to certain embodiments, the LEM 116 provides data relating to laser pulse energy - not laser power. If necessary, the LEM PE data can be converted to laser power by multiplying PE by the instantaneous laser PRF. The DSP (and, through a non-realtime command, a system control computer (SCC) 620) can provide access to either a single sampled power reading, or a sequence of power readings (through a data recorder).

[0056] The CPM 612 is the reference sensor for power measurements in the system. The LEM readings can be calibrated against the CPM 612 to ensure the accuracy of realtime power setting and monitoring.

G. Power Calibrations

[0057] To measure laser energy and control laser power, certain components of the laser processing apparatus may require calibration. In general, however, the calibration and power setting approach can be summarized as follows: (1) the CPM 612 is calibrated against an external reference; (2) the LEM 116 is calibrated using the CPM 612; (3) the LET 710 is calibrated using the LEM 116; (4) the AOD attenuator linearization is calibrated using the LEM 116; (5) for a given PE/PRF setpoint, the nominal AOD transmission (NomTrans) is calculated based on the LET 710; (6) during application processing, LEM feedback is used to monitor for power error conditions, and may optionally be used to fine-tune the AOD transmission command in realtime; and (7) a LEM calibration 716 can be updated periodically to maintain LEM calibration as optics transmission changes. Details of the calibration steps are given below.

1. CPM Calibration

[0058] During CPM calibration, or during any use of the CPM 612 in subsequent operations, CPM readings (both power and offset) are averaged over a number of readings (e.g., 100 readings), over a period of time (e.g., 2 seconds), after allowing a settling period (e.g., 3 seconds) between power changes. FIG. 9 illustrates a CPM reading transient that may be generated in accordance with embodiments of the present disclosure. CPM readings can be adjusted for CPM offset, which may be sensitive to the power meter temperature. The offset can be measured during each use of the CPM 612. To maximize accuracy, the CPM offset (with zero laser power

applied) can be read after the powered reading, reducing the thermal error due to CPM heating. The same averaging process as described above can be used.

2. Laser Energy Monitor (LEM) Calibration

[0059] The LEM reading of pulse energy is corrected for offset and scaling, resulting in a LEM PE reading PElem (e.g., in μJ units), according to the following:

$$PElem = (LemCount - LemOffset)*LemSF,$$

where LemCount is the raw ADC readings from the LEM 116, where LemSF and LemOffset are calculated by measuring a series of power levels with both the LEM 116 and the CPM 612, from zero to max power.

[0060] The LEM calibration 716 can be available as both a user-interactive procedure and as an automated procedure (e.g., during runtime of the laser processing apparatus 100). In one embodiment, the user-interactive procedure includes a display of the collected data and the best-fit line, and measurement statistics. The automated procedure may be run automatically, with appropriate error detection and reporting. After each LEM calibration 716, the updated SF and offset values may be recorded in a log for diagnostics and tracking of optics degradation. A LEM verification routine is provided, in certain embodiments, which repeats the LEM calibration 716, but uses existing calibration data to generate a curve-fit line for display and statistics reporting. In one embodiment, the time required to perform LEM calibration 716 is less than 1 second.

3. AOD Linearization Calibration

[0061] The AOD linearization calibration creates the linearization table 622 for AOD attenuation. It will be appreciated that the AOD linearization calibration procedure simply linearizes the AOD transmission 618 (i.e., the AOD linearization table 622 is used to linearize the non-linear transmission response of the AOD, as schematically represented by the AOD efficiency transmission 618 versus RF command), and does not depend on (i.e., is insensitive to) the characteristics of the laser system 104 or optics train. Transmission losses, or laser power variations with PRF, are irrelevant if this test is run at a fixed PRF. Although this calibration uses the LEM 116 for feedback, the feedback need only be linear. The calibration algorithm may ignore LEM scaling and offset. Since the linearity error of the LEM 116 is relatively small (e.g., <1%) for a fixed laser PRF, the LEM calibration 716 is not a prerequisite for the AOD linearization calibration.

[0062] The AOD linearization calibration can be available as both a user-interactive procedure and as an automated procedure during runtime. In one embodiment, the user-interactive procedure includes a display of relevant data and progress updates. In one embodiment, the automated procedure is run automatically, with appropriate error detection and reporting. Before an automated recalibration is performed, it is beneficial to verify the AOD linearization performance (e.g., using existing linearization data before recalibration), and the max error recorded in the log for diagnostic tracking. In addition, each new linearization table is, in certain embodiments, stored in a time-stamped file to support tracking of AOD performance.

4. Laser Pulse Energy Table (LET) Calibration

[0063] The LET 710 is calibrated using LEM readings, after the LEM 116 is calibrated against the CPM 612. This allows the LET calibration to run quickly, just before panel processing, to provide a valid calibration that can support open-loop real-time power control. LET calibration using LEM readings provides a fast calibration (e.g., < 1 s), since the LEM 116 has no response lag time. Using the LEM 116 as a reference sensor appropriately accounts for laser degradation effects. Transmission losses between the LEM 116 and workpiece 102 are accounted for within the uncertainty of the LEM calibration 716. Due to variation in optical transmission losses between the LEM 116 and workpiece 102 (or CPM 612), the LEM 116 is periodically recalibrated.

[0064] In certain embodiments, the LET calibration is available as a user-interactive procedure, as a fully automated procedure, or a combination thereof. The interactive procedure (typically performed during system calibration) allows the user to review data results and specify calibration parameters for the automated procedure. The automated procedure may be run before each laser-processing the workpiece 102 and need not necessarily require any user interaction, except in case of error.

[0065] During LET calibration, the AOD transmission command is held constant at the maximum linearized transmission over the full AOD deflection range. FIG. 11 is a flowchart of an example LET calibration process 1100 according to one embodiment. The LET calibration process 1100 includes moving 1110 to the CPM 612 to dump power. For automated LET calibration, according to certain embodiments, this is done at the end of the previous laser-processing sequence to

minimize overhead. The LET calibration process 1100 further includes commanding 1112 the AOD transmission to the maximum transmission over the fully calibrated AOD range. For a predetermined number of PRF settings (e.g., at least 20 PRF settings) covering the laser's operational PRF range, the LET calibration process 1100 repeats: setting 1114 the PRF to the next calibration value; turning on 1116 the laser system 104; and collecting 1118 a selected number of samples (e.g., at least 1000 samples) of LEM data at the current PRF value. Collecting 1118 the samples of LEM data may further include applying LEM calibration 716 to convert the data to μJ, and storing the average (for calibration data) and standard deviation (for diagnostics). The LET calibration process 1100 further includes querying 1120 whether there are additional PRF settings in the predetermined number of PRF settings covering the laser's operational PRF range. If there are additional PRF settings, the LET calibration process 1100 returns to setting 1114 the PRF to the next calibration value, turning on 1116 the laser system, and collecting 1118 samples of LEM data at the current (next) PRF value.

[0066] Once LEM data is collected for each PRF setting, the LET calibration process 1100 further includes fitting 1122 a curve to the resulting PE vs PRF data to filter out short-term laser fluctuations at each PRF setting, and querying 1124 whether an error is detected in the LEM measurements. The LET calibration process 1100 includes reporting 1126 an error if the standard deviation of the LEM measurement at any PRF setting exceeds a first predetermined threshold (e.g., 5%), or if the difference between the curve fit and averaged PE reading at any PRF setting exceeds a second predetermined threshold (e.g., 1%). The LET calibration process 1100 includes creating 1128, based on the curve fit polynomial, a lookup table of 1/PE vs IPP, normalized (e.g., to a maximum of 1.0, as shown in Fig. 8). The IPP is specified by integer multiples of, for example, 40 ns. In certain embodiments, the lookup table includes all valid entries for IPP over the laser's operational range. For example, one laser system may operate within a PRF range from 40 kHz to 90 kHz, resulting in a IPP of 25 μs to 11.1 μs, or a 40 ns IPP count of 278 to 625 (348 entries). The LET calibration process 1100 also includes downloading 1130 the LET calibration table to the GIO.

[0067] In certain embodiments that include the interactive calibration procedure discussed above, the LET calibration process 1100 further includes graphically displaying 1132 the resulting data. In such embodiments, data plots are presented

for review, which may including the following examples: data points for the min, max, and average LEM reading at each tested PRF data point, overlaid with the resulting polynomial fit curve; standard deviation (as a % of mean) of the LEM reading for each PRF data point; and/or difference between curve fit and average reading (e.g., as a % of mean) for each PRF data point.

[0068] In addition, or in other embodiments, the LET calibration process 1100 includes performing 1133 a LET verification routine to verify performance. An example LET verification routine includes: a single-point test, in which the user specifies a workpiece 102 power and PRF, and reads the resulting power at the CPM 612; and/or an automated verification procedure, similar to the AOD linearization verification, which sweeps through all pulse periods at a specified pulse energy setting. Feedback is taken from the LEM 116. Error is reported graphically as a function of PRF.

H. Realtime Power Control

[0069] In one embodiment, because the GIO has access to Q-switch (QSW) timing, LEM readings, IPP commands, and PE commands, the GIO implements realtime power control. As described above, power control commands can be synchronized with commands to QSW timing of laser pulse generation within the laser system 104. In certain embodiments, valid LEM readings are available only after a QSW command causes the laser system 104 to generate a laser pulse. Due to queuing of laser commands between the DSP and the GIO, the DSP has limited knowledge of the timing of LEM feedback data relative to the laser commands. Encapsulating the power control function within the GIO simplifies data handling and error reporting.

[0070] In one embodiment, realtime power control is open loop, based on a freshly calibrated LET 710 downloaded to the GIO just before panel processing. PE feedback (PEfb) from the LEM sensor is corrected for scale factor and offset. The PEfb is subtracted from the corresponding PE command (PEcmd) to provide PE error for error checking. Note that PEcmd can change in realtime, and thus the GIO subtracts PEfb from the corresponding PEcmd signal.

[0071] The GIO power controller 616 streams PEfb, PE error (PEerr), and transmission command (TransCmd) to the DSP for error checking and diagnostic recording, as will described in greater detail below. Note that PEcmd = PEfb + PEerr, and can be derived by the DSP if necessary, or added to the GIO data stream

if more convenient. The GIO power controller 616 receives PEcmd and IPP in the data stream from the DSP.

1. Power Control Loop

[0072] The optional power control loop (PCL) 712 may be included to monitor the PE error in realtime and to adjust the AOD transmission command (e.g., to minimize PE error). The overview of FIG. 6 places the PCL 712 within the context of the system power control subsystem, while FIG. 7 details the signal flow in the PCL 712. The PCL 712 is optional since open loop control can be accurate over reasonable time periods (e.g., several minutes). If open loop performance is found to be inadequate, the PCL 712 can be implemented.

[0073] The PCL 712 may be configured to adjust the commanded AOD transmission during processing to maintain the desired PE setpoint. To avoid noise sensitivity and excessive dithering of the transmission command, the error is integrated after applying a correction gain alpha (α) that is selected to be a compromise between response time and noise sensitivity (i.e., between noise and settling time). The integrator output (DeltaTrans) modifies the nominal transmission (NomTrans, calculated from the LET 710 for the commanded IPP and PE) to create the final AOD transmission command, according to the following equations. Note that in certain embodiments these equations are evaluated once per QSW cycle (i.e., with each update of PEfb).

$$DeltaTrans(k) = DeltaTrans(k-1) - alpha*(PEfb - PEcmd)/PEcmd$$

$$TransCmd(k) = NomTrans*[1 + DeltaTrans(k)]$$

[0074] DeltaTrans is the relative change in the transmission command. DeltaTrans can be set to zero upon a recalibration of the LET 710, when the open loop transmission estimate NomTrans is most accurate (nominally exact). In certain embodiments, this occurs each time a workpiece is laser-processed. Note that this algorithm includes a division by PEcmd, which may be difficult in the GIO firmware. A second lookup table may be used to translate PEcmd to 1/PEcmd to replace the division by a multiply.

I. Example Runtime Operation

[0075] FIG. 12 is a flowchart of an example operation sequence 1200 that may be implemented according to one embodiment for power control during laser-processing of the workpiece 102 shown in FIG. 1. The operation sequence 1200 includes setting up and loading 1210 an application. During application setup, the operation

sequence 1200 verifies power settings against the power limit table, which are hardcoded per the system inventory. The operation sequence 1200 also warns the user of tolerance or power level violations, if detected. The operation sequence 1200 further includes opening 1212 the laser shutter and querying 1214 whether the LEM/AOD calibration timeout period has expired. If the LEM/AOD calibration timeout period has expired, the operation sequence 1200 includes moving 1216 over the CPM 612, recalibrating 1218 the LEM 116 against the CPM 612 (e.g., using an automated process), and recalibrating 1220 AOD linearization (e.g., using an automated process).

[0076] The operation sequence 1200 further includes querying 1222 whether laser power control is enabled in an application recipe setting. If the laser power control is enabled, the operation sequence 1200 includes updating 1224 the LET 710 by running the automated calibration routine, storing 1226 the LET 710 in the calibration file, downloading 1228 the updated LET 710 to the GIO, and resetting 1230 DeltaTrans to zero in the GIO power controller 616.

[0077] The operation sequence 1200 further includes querying 1232 whether any PE/PRF combinations exceed the system capability as described by the LET 710. If a PE/PRF combination exceeds the system capabilities, the operation sequence 1200 includes flagging 1234 an error and aborting the processing. Accordingly, the operation sequence 1200 proceeds to closing 1236 the laser shutter. If, however, no PE/PRF combinations exceed the system capability as described by the LET 710, the operation sequence 1200 includes running 1238 viewing alignment and application (panel/pattern) alignment, processing 1240 the application, and monitoring 1242 realtime power control feedback for power control statistics and errors. After completion of processing, the operation sequence 1200 may further include logging 1244 PE control statistics (e.g., min, max, average, and RMS error as a percent of commanded PE) and/or logging any power control errors, and reporting any error condition to the user. The operation sequence 1200 ends by closing 1236 the laser shutter. In certain embodiments, the AOD acts as the laser shutter. In such embodiments, closing 1236 the laser shutter includes sending a transmission command to the AOD for zero transmission.

[0078] Certain details of the example operation sequence 1200 shown in FIG. 12 are further discussed below.

1. Application Setup

[0079] In certain embodiments, applications are set up according to the specified system power, described by the power limit table. This table can be precalculated based on specified laser performance (PE vs PRF) and the optics train configuration (efficiency), based on corresponding inventory selections. In one embodiment, the estimated optical efficiency is increased according to the AOD operational deflection range.

2. PE Tolerance Checking and Error Recording

[0080] Proper control of PE during laser processing facilitates desirable process control. In certain embodiments, the PE error is monitored in realtime, and PEfb and PEerr are recorded for process control and diagnostic data. The monitoring can determine whether the PE readings are within some predefined or user-defined processing tolerance. To avoid spurious errors due to the inherent laser pulse instability, the PE error is filtered before the tolerance check. As with the integration filter in the PCL 712, since the PE data arrives at variable time intervals, the error filter updates with every PE sample, rather than at a constant sample rate. A realtime command to set the power tolerance threshold is passed to the DSP to set up power tolerance checking.

[0081] In one embodiment, power control data (e.g., TransCmd, PEcmd, PEfb and PEerr) is recorded for failure diagnostics. This data may be stored in a circular buffer, and may be retrieved when a tolerance error occurs. Upon detection of a PE tolerance error, the recording is triggered to capture a certain number of samples of PE data (e.g., at least 100 samples) surrounding the error event.

[0082] In one embodiment, laser-processing of the workpiece 102 is halted if a power tolerance error is detected. In one embodiment, the user can resume panel processing in the vicinity of the feature at which the processing error occurred. Some processing redundancy or gaps may be acceptable (since the region where the workpiece 102 was being laser-processed would likely be scrapped in the vicinity of the error). In one embodiment, the context of the processing error is presented to the user (e.g., a graphic of the workpiece, with the failure location highlighted, may be presented to the user via a display).

3. Power Tolerance Policies

[0083] At the SCC level, tolerance checking may be optional when running an application. If the tolerance checking is disabled, realtime power control can still be

applied as described above, but the LET 710 may not be recalibrated, and run-time tolerance checking can be disabled.

[0084] In one embodiment, and with reference to FIG. 10, the pulse period (PP) (i.e., 1/PRF) may change between process segments (e.g., between process segment "n" and a subsequent process segment "n+1") without a synchronization deadzone to allow "seamless" changes in the pulse period or PRF. During the transition from one pulse period to another, only the two pulse periods exist, i.e., there is no intermediate or unusually high or low pulse period between the two. This allows the laser system 104 to generate laser pulses 1000 at a predictable pulse energy at any pulse period. Generally, the aforementioned AOD transmission changes between the two pulse period settings to control PE of the laser pulses 1000 delivered to the workpiece 102 in each process segment.

[0085] To make the transition between pulse periods (e.g., switching between PPn and PPn+1) at least substantially "seamless", the GIO specifies a new pulse period during the final PPn (e.g., as designated at 1002). The GIO recognizes this new pulse period (e.g., PPn+1) and sets up the subsequent laser pulse according to this new value. The DSP times this command such that the switch between PPn and PPn+1 occurs at the correct time (e.g., within 1 μs).

[0086] In one embodiment, the timing of laser pulses relative to segment boundaries 1004 is accounted for. In one embodiment, the velocity of the beam position may change between process segments, resulting in a change in bite size for one transition pulse 1006 associated with the new pulse period PPn+1. In another embodiment, the AOD transmission for the laser pulses generated during the new process segment n+1 is established, since the new pulse period PPn+1 will likely change the PE of laser pulses generated by the laser system for the new process segment n+1. Thus, the transition pulse 1006 is generated by the laser system 104 within the appropriate process segment at the appropriate PE command (AOD transmission).

[0087] According to the pulse synchronization process of the embodiment shown in FIG. 10, the first laser pulse generated during a particular process segment is generated within an initialization period 1008 (e.g., equal to one-half of the pulse period associated with the particular process segment) after the beginning of the process segment (e.g., if PPn is 1 μs, then the initialization period could be 0.5 μs). In another embodiment, the last laser pulse generated during a particular process

segment is generated within a finalization period 1010 (e.g., equal to one-half of the pulse period associated with the particular process segment) after the beginning of the process segment (e.g., if PPn is 1 μs, then the finalization period could be 0.5 μs).

[0088] It will be understood by those having skill in the art that many changes may be made to the details of the above-described embodiments without departing from the underlying principles of the invention. The scope of the present invention should, therefore, be determined only by the following claims.

Claims

1. A laser processing apparatus to form or process features within one or more materials of a workpiece, the laser processing apparatus comprising:

a laser system to generate a beam of laser pulses;

a pulse energy control system to adjust a pulse energy of each laser pulse in the beam of laser pulses on a pulse-by-pulse basis, the pulse energy control system comprising an open loop feedforward control path that selects a pulse energy transmission value for each laser pulse based on a calibrated transmission curve that maps laser pulse energy as a function of pulse repetition frequency (PRF); and

a positioning system to coordinate one or more locations of the beam of laser pulses relative to the workpiece.

2. The laser processing apparatus of claim 1, further comprising:

a laser energy monitor to measure a laser pulse energy of each laser pulse in the beam of laser pulses; and

a power control loop to further adjust the pulse energy of one or more laser pulses in the beam of laser pulses based on feedback from the laser energy monitor.

3. The laser processing apparatus of claim 2, wherein the open loop feedforward control path selects the pulse energy transmission value for each laser pulse using a first transmission command signal based on the calibrated transmission curve; and

wherein the power control loop is configured to:

receive a pulse energy error signal comprising a difference between a selected laser pulse energy and a measured laser pulse energy provided by the laser energy monitor;

calculate a transmission correction signal based on the pulse energy error signal; and

modify the first transmission command signal with the transmission correction signal to produce a second transmission command signal for selecting the pulse energy transmission value for each laser pulse.

4. The laser processing apparatus of claim 3, wherein the power control loop is configured to calculate the transmission correction signal by integrating the pulse energy error signal after applying a correction gain that is selected based on response time and noise sensitivity.

5. The laser processing apparatus of claim 1, wherein the open loop feedforward control path includes a laser pulse energy table (LET) comprising available values of laser pulse energy at the workpiece versus PRF.

6. The laser processing apparatus of claim 5, wherein the pulse energy control system comprises an attenuator to implement calibrated optical power attenuation of the pulse energy of each laser pulse in the beam of laser pulses by varying transmissions of the attenuator based on the LET for a selected pulse energy at a current PRF.

7. The laser processing apparatus of claim 6, wherein the attenuator is selected from a group comprising an acousto-optic deflector (AOD), an acousto-optic modulator (AOM), and an electro-optic modulator (EOM).

8. The laser processing apparatus of claim 6, wherein the attenuator comprises a transmission linearization table that maps nonlinear transmission characteristics of the attenuator versus applied radio frequency (RF) power and/or frequency.

9. The laser processing apparatus of claim 1, wherein the pulse energy control system comprises:

a laser energy monitor (LEM) to measure laser pulse energies of the beam of laser pulses; and

a chuck power meter (CPM) to provide a reference sensor for power measurements in the laser processing apparatus, wherein the measured laser pulse energies provided by the LEM are calibrated against measurements provided by the CPM.

10. The laser processing apparatus of claim 9, wherein the pulse energy control system is configured to calibrate the available values of laser pulse energy in the LET using the measured laser pulse energies provided by the LEM.

11. The laser processing apparatus of claim 1, wherein the pulse energy control system is configured to adjust the pulse energy of one or more laser pulses in the beam of laser pulses in response to a change in PRF.

12. The laser processing apparatus of claim 1, wherein the pulse energy control system is configured to adjust the pulse energy of one or more laser pulses in the beam of laser pulses in coordination with the positioning system based on a selected location of the beam of laser pulses relative to the workpiece.

13. The laser processing apparatus of claim 12, wherein the positioning system comprises:

a workpiece position system configured to translate the workpiece in one or more directions to scan the workpiece with the beam of laser pulses within a first scan field; and

a beam positioning system to direct the beam of laser pulses so as to scan the workpiece within a second scan field, the second scan field being smaller than and within the first scan field.

14. The laser processing apparatus of claim 13, wherein the pulse energy control system comprises a deflector to further direct the beam of laser pulses so as to scan the workpiece within a third scan field, the third scan field being smaller than and within the second scan field.

15. A method of controlling laser pulse power within a beam of laser pulses generated by a laser processing apparatus configured to laser-process a workpiece by causing laser pulses within the beam of laser pulses to impinge upon the workpiece, the method comprising:

selecting a pulse energy transmission value for each laser pulse within the beam of laser pulses based on a calibrated transmission curve that maps pulse energy to changes in pulse repetition frequency (PRF);

adjusting, based on the selected pulse energy transmission value, a pulse energy of each laser pulse in the beam of laser pulses on a pulse-by-pulse basis ; and

coordinating movement of the beam of laser pulses relative to the workpiece.

16. The method of claim 15, further comprising:

measuring a laser pulse energy of each laser pulse in the beam of laser pulses; and

further adjusting the pulse energy of one or more laser pulses in the beam of laser pulses based on the measured laser pulse energy.

17. The method of claim 16, further comprising:

selecting the pulse energy transmission value for each laser pulse using a first transmission command signal based on the calibrated transmission curve;

receiving a pulse energy error signal comprising a difference between a selected laser pulse energy and the measured laser pulse energy;

calculating a transmission correction signal based on the pulse energy error signal; and

modifying the first transmission command signal with the transmission correction signal to produce a second transmission command signal for selecting the pulse energy transmission value for each laser pulse.

18. The method of claim 17, wherein calculating the transmission correction signal comprises integrating the pulse energy error signal after applying a correction gain that is selected based on response time and noise sensitivity.

19. The method of claim 15, further comprising adjusting the pulse energy of one or more laser pulses in the beam of laser pulses in response to a change in PRF.

20. The method of claim 15, further comprising adjusting the pulse energy of one or more laser pulses in the beam of laser pulses based on the coordinating movement of the beam of laser pulses relative to the workpiece such that selected laser pulse energies are provided to corresponding locations on or in the workpiece.

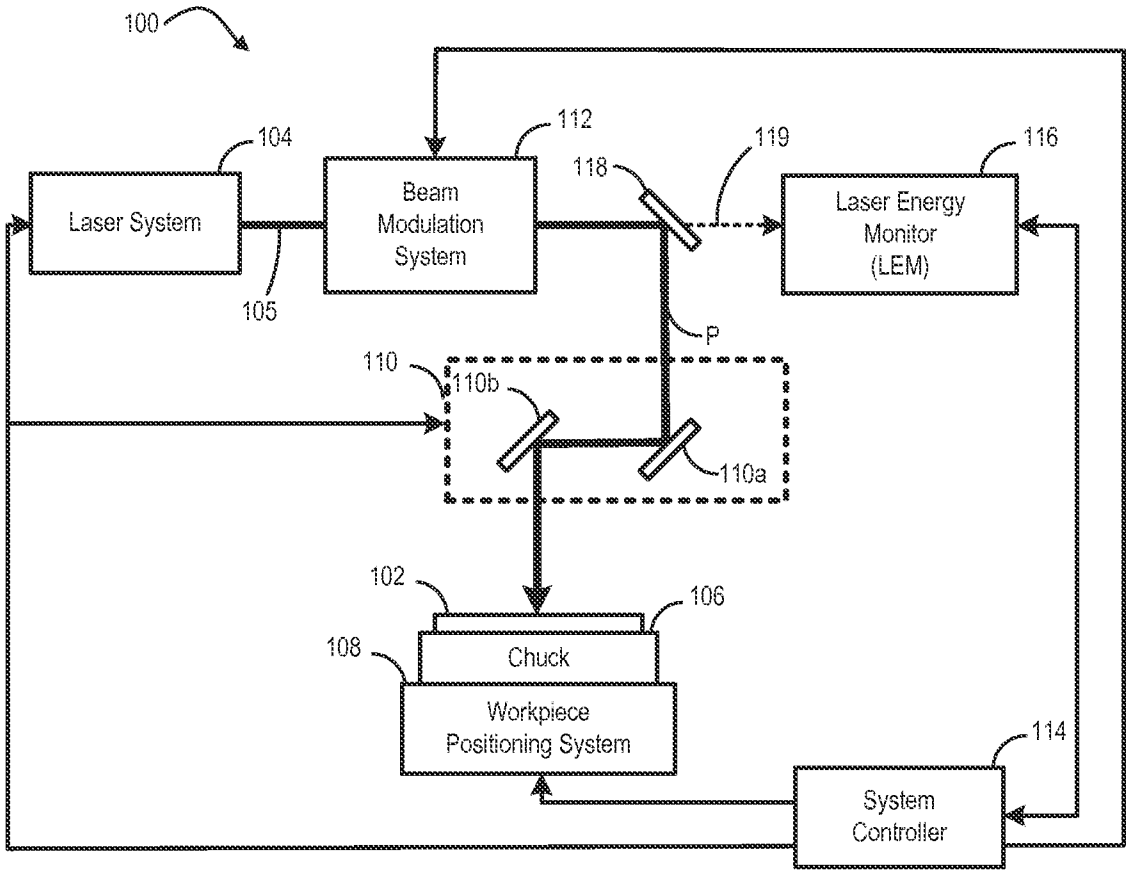
100
104
Laser System
105
112
Beam
Modulation
System
118
119
116
Laser Energy
Monitor
(LEM)
P
110
110b
110a
102
106
108
Chuck
Workpiece
Positioning System
114
System
Controller

FIG. 1

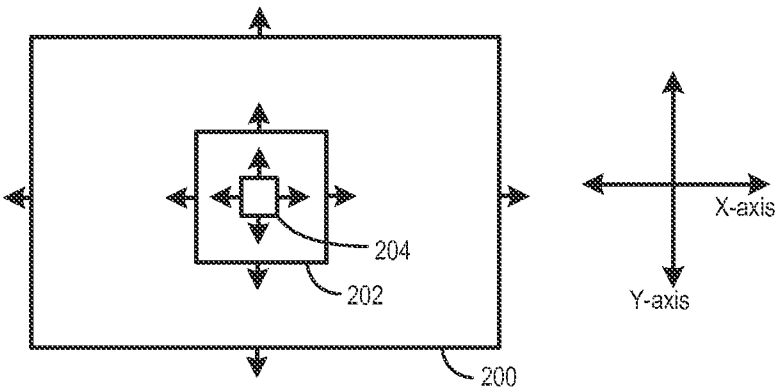
204
202
200
X-axis
Y-axis

FIG. 2

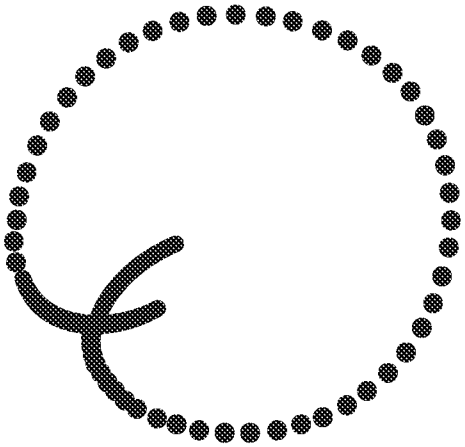

FIG. 3

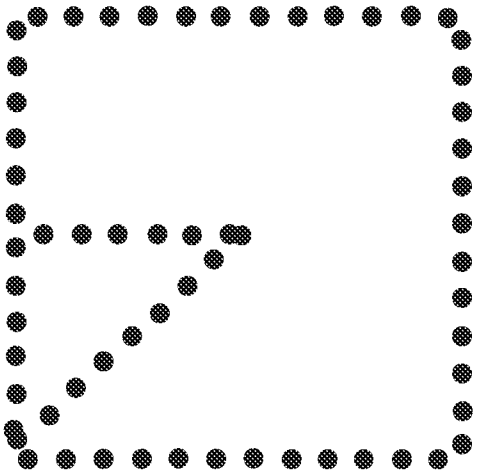

FIG. 4

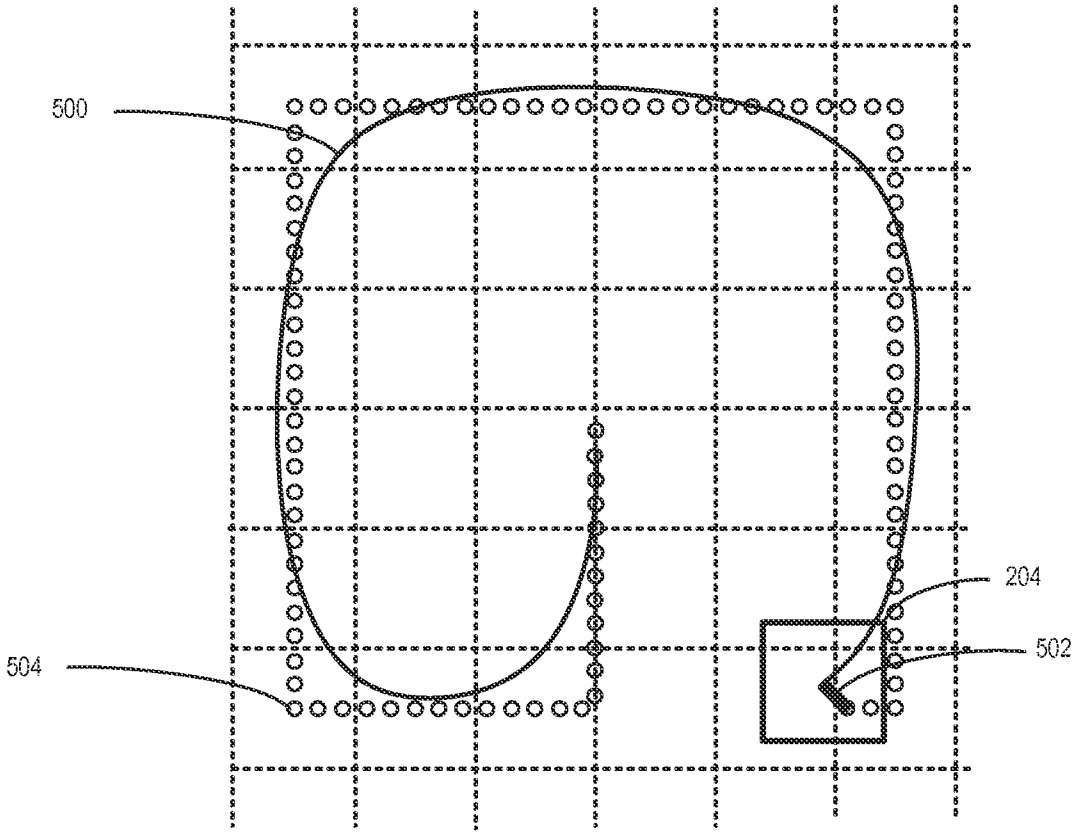

FIG. 5

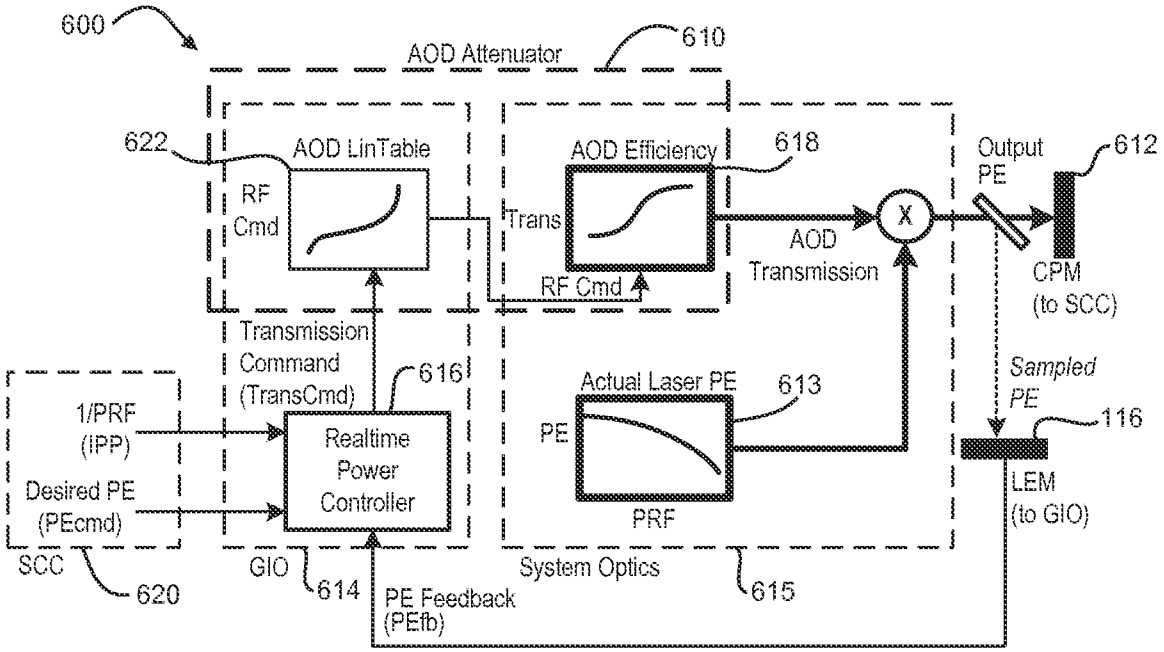
600
AOD Attenuator
610
622
AOD LinTable
RF Cmd
AOD Efficiency
618
Trans
RF Cmd
AOD Transmission
Output PE
612
CPM (to SCC)
Transmission Command (TransCmd)
616
Actual Laser PE
613
PE
PRF
Sampled PE
116
LEM (to GIO)
1/PRF (IPP)
Desired PE (PEcmd)
Realtime Power Controller
SCC
620
GIO
614
PE Feedback (PEfb)
System Optics
615

FIG. 6

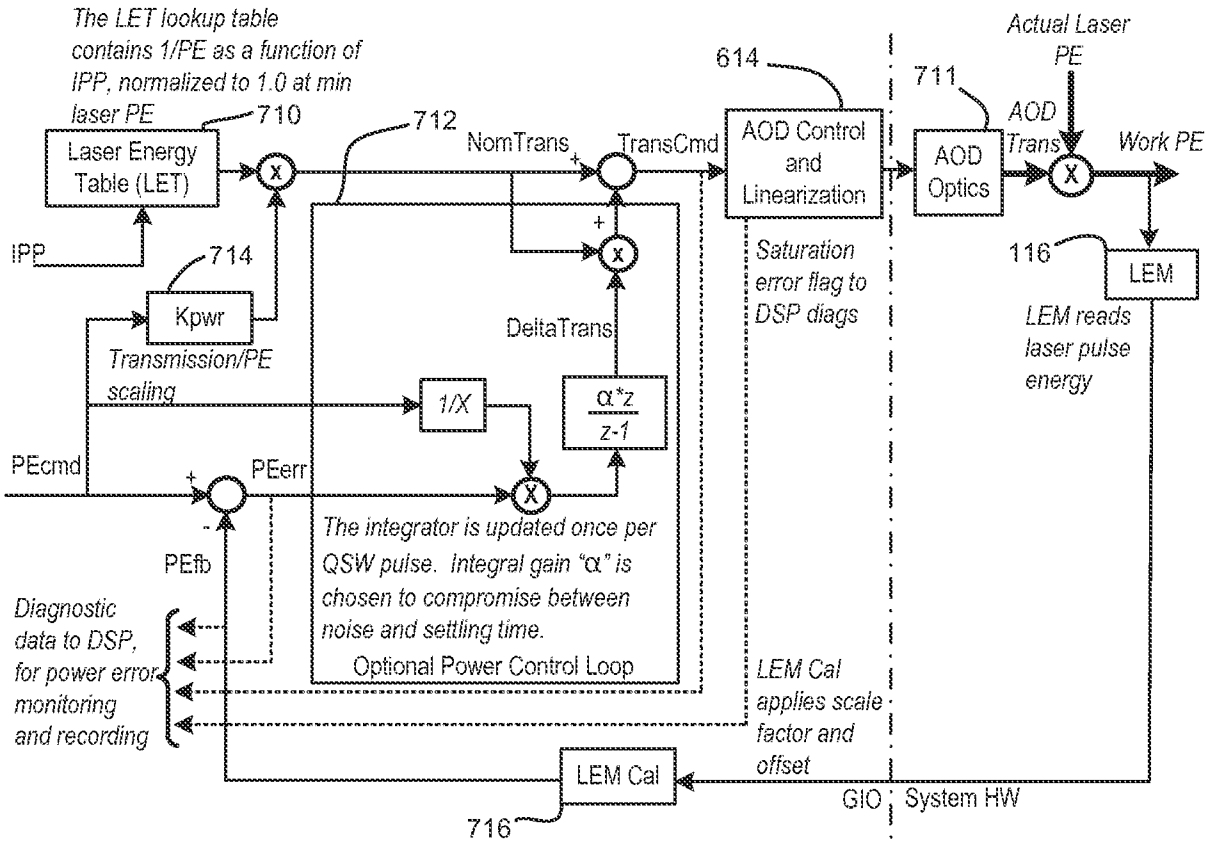
The LET lookup table contains 1/PE as a function of IPP, normalized to 1.0 at min laser PE
710
Laser Energy Table (LET)
712
NomTrans
TransCmd
614
AOD Control and Linearization
711
AOD Optics
Actual Laser PE
AOD Trans
Work PE
IPP
714
Kpwr
Transmission/PE scaling
DeltaTrans
1/X
α*z / z-1
PEcmd
PEerr
PEfb
Saturation error flag to DSP diags
116
LEM
LEM reads laser pulse energy
The integrator is updated once per QSW pulse. Integral gain "α" is chosen to compromise between noise and settling time.
Optional Power Control Loop
Diagnostic data to DSP, for power error monitoring and recording
LEM Cal applies scale factor and offset
LEM Cal
716
GIO
System HW

FIG. 7

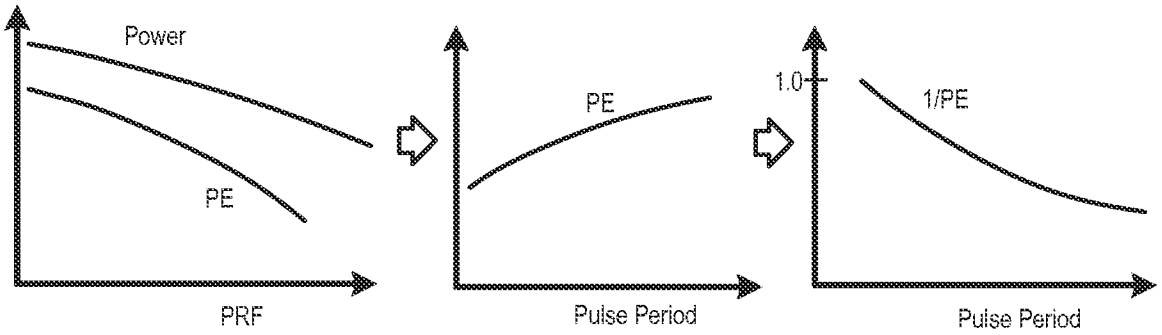
Power
PE
PRF
PE
Pulse Period
1.0
1/PE
Pulse Period

FIG. 8

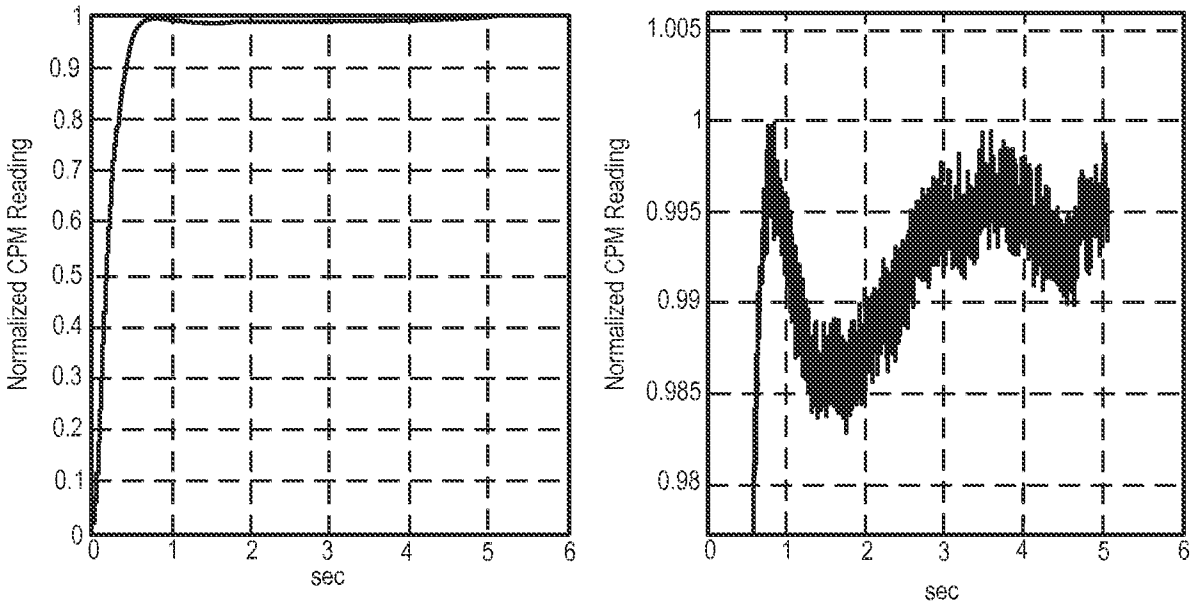
Normalized CPM Reading
sec
Normalized CPM Reading
sec

FIG. 9

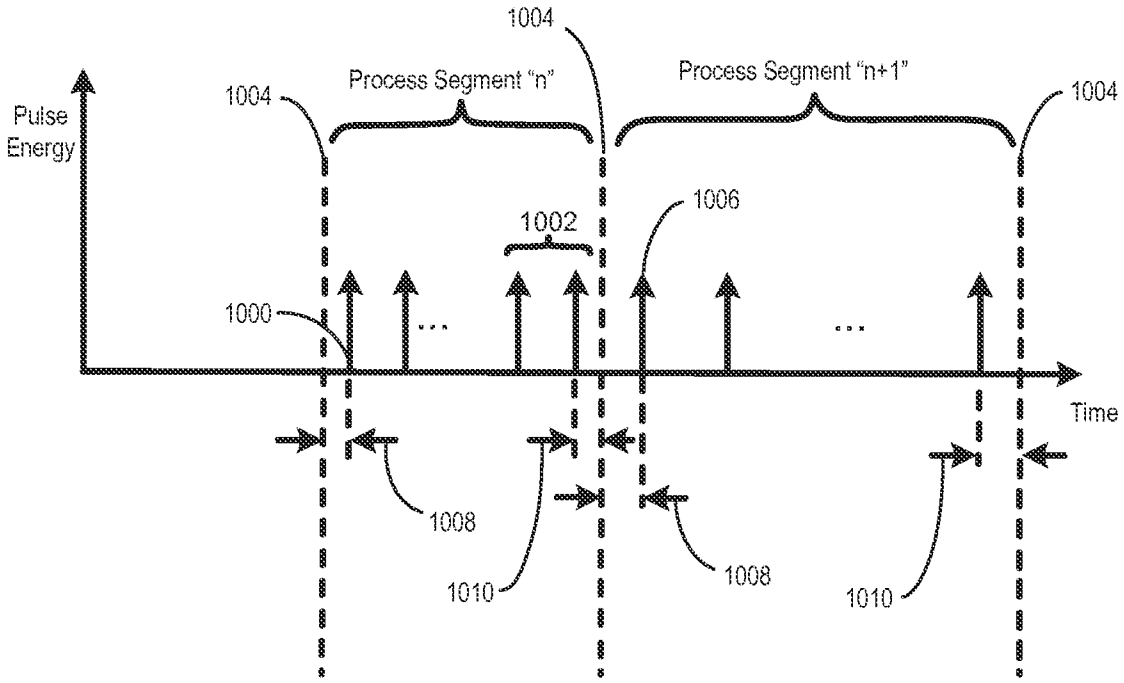
1004
Process Segment "n"
Process Segment "n+1"
1004
1004
Pulse Energy
1002
1006
1000
Time
1008
1010
1008
1010

FIG. 10

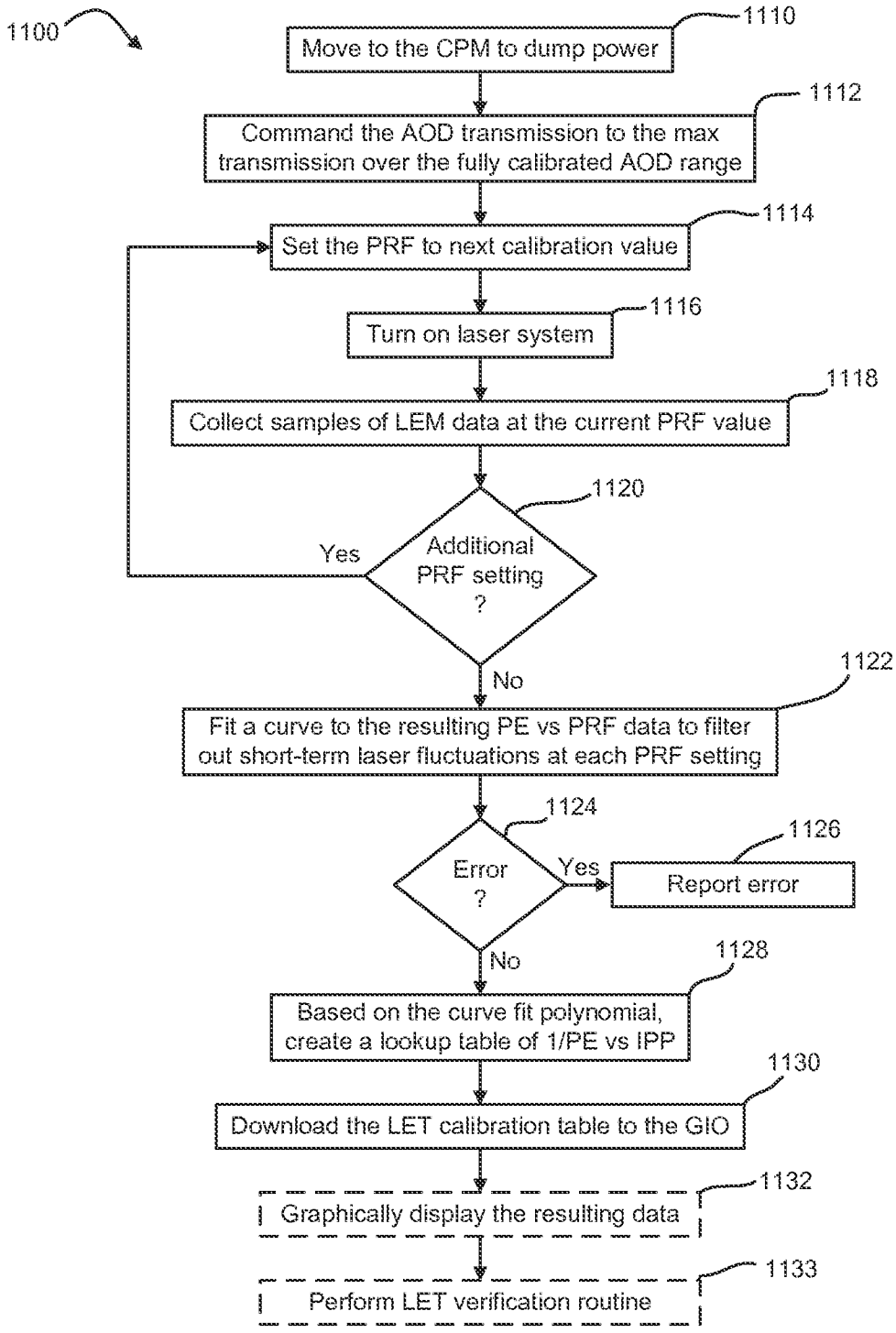
1100
Move to the CPM to dump power
1110
Command the AOD transmission to the max transmission over the fully calibrated AOD range
1112
Set the PRF to next calibration value
1114
Turn on laser system
1116
Collect samples of LEM data at the current PRF value
1118
Additional PRF setting ?
1120
Yes
No
Fit a curve to the resulting PE vs PRF data to filter out short-term laser fluctuations at each PRF setting
1122
Error ?
1124
Yes
Report error
1126
No
Based on the curve fit polynomial, create a lookup table of 1/PE vs IPP
1128
Download the LET calibration table to the GIO
1130
Graphically display the resulting data
1132
Perform LET verification routine
1133

FIG. 11

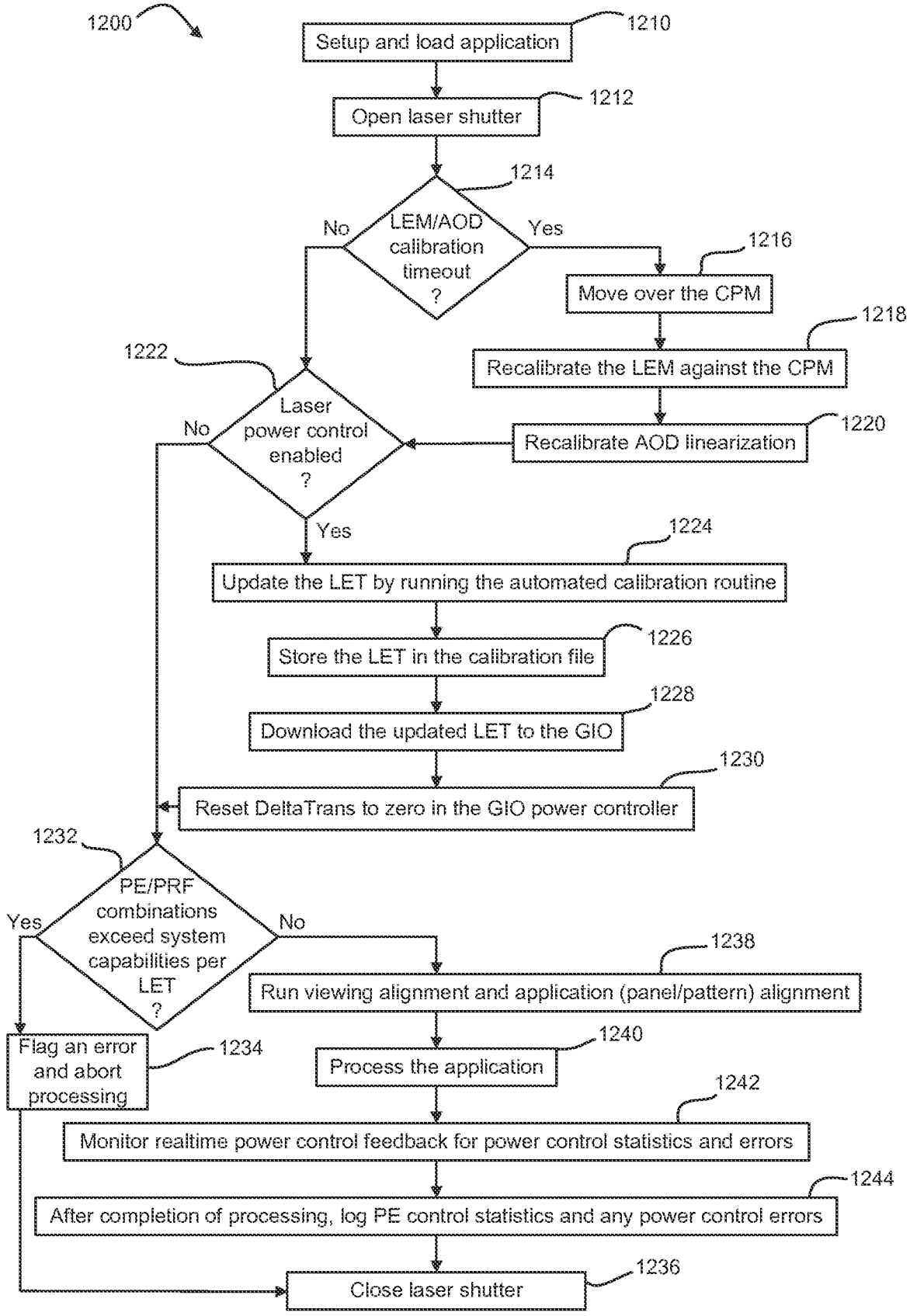
1200
Setup and load application
1210
Open laser shutter
1212
1214
LEM/AOD calibration timeout ?
No
Yes
1216
Move over the CPM
1218
Recalibrate the LEM against the CPM
1222
Laser power control enabled ?
No
Recalibrate AOD linearization
1220
Yes
1224
Update the LET by running the automated calibration routine
Store the LET in the calibration file
1226
1228
Download the updated LET to the GIO
1230
Reset DeltaTrans to zero in the GIO power controller
1232
PE/PRF combinations exceed system capabilities per LET ?
Yes
No
1238
Run viewing alignment and application (panel/pattern) alignment
Flag an error and abort processing
1234
1240
Process the application
1242
Monitor realtime power control feedback for power control statistics and errors
1244
After completion of processing, log PE control statistics and any power control errors
1236
Close laser shutter

FIG. 12

INTERNATIONAL SEARCH REPORT

International application No.
PCT/US2014/010902

A. CLASSIFICATION OF SUBJECT MATTER

B23K 26/062(2014.01)i, B23K 26/10(2006.01)i, B23K 26/03(2006.01)i

According to International Patent Classification (IPC) or to both national classification and IPC

B. FIELDS SEARCHED

Minimum documentation searched (classification system followed by classification symbols)
B23K 26/062; G02F 1/11; B23K 26/38; H01S 3/00; B23K 26/00; B23K 26/10; B23K 26/03

Documentation searched other than minimum documentation to the extent that such documents are included in the fields searched
Korean utility models and applications for utility models
Japanese utility models and applications for utility models

Electronic data base consulted during the international search (name of data base and, where practicable, search terms used)
eKOMPASS(KIPO internal) & keywords: pulse energy, control, adjust, calibrated transmission, positioning, feature, and loop

C. DOCUMENTS CONSIDERED TO BE RELEVANT

Category*	Citation of document, with indication, where appropriate, of the relevant passages	Relevant to claim No.
A	US 6370174 B1 (ONKELS et al.) 09 April 2002 See abstract; column 16, lines 14-64, column 18, lines 10-40; and claim 1.	1-20
A	US 7244906 B2 (JORDENS et al.) 17 July 2007 See abstract; column 4, lines 25-56; and claim 1.	1-20
A	US 5593606 A (OWEN et al.) 14 January 1997 See abstract; and claims 1,27.	1-20
A	US 7027199 B2 (JOHNSON, JAY) 11 April 2006 See abstract; column 6, lines 4-56; and claims 1,3.	1-20
A	US 2007-0075063 A1 (WILBANKS et al.) 05 April 2007 See abstract; paragraphs [0045],[0049],[0052]; and claim 1.	1-20

☐ Further documents are listed in the continuation of Box C. ☒ See patent family annex.

* Special categories of cited documents:
"A" document defining the general state of the art which is not considered to be of particular relevance
"E" earlier application or patent but published on or after the international filing date
"L" document which may throw doubts on priority claim(s) or which is cited to establish the publication date of another citation or other special reason (as specified)
"O" document referring to an oral disclosure, use, exhibition or other means
"P" document published prior to the international filing date but later than the priority date claimed
"T" later document published after the international filing date or priority date and not in conflict with the application but cited to understand the principle or theory underlying the invention
"X" document of particular relevance; the claimed invention cannot be considered novel or cannot be considered to involve an inventive step when the document is taken alone
"Y" document of particular relevance; the claimed invention cannot be considered to involve an inventive step when the document is combined with one or more other such documents,such combination being obvious to a person skilled in the art
"&" document member of the same patent family

Date of the actual completion of the international search	Date of mailing of the international search report
15 April 2014 (15.04.2014)	**17 April 2014 (17.04.2014)**

Name and mailing address of the ISA/KR
International Application Division
Korean Intellectual Property Office
189 Cheongsa-ro, Seo-gu, Daejeon Metropolitan City, 302-701,
Republic of Korea
Facsimile No. +82-42-472-7140

Authorized officer
SONG, Ho Keun
Telephone No. +82-42-481-5580

INTERNATIONAL SEARCH REPORT

Information on patent family members

International application No.
PCT/US2014/010902

Patent document cited in search report	Publication date	Patent family member(s)	Publication date
US 6370174 B1	09/04/2002	AU 1998-88267 A1	23/04/1999
		AU 1998-91131 A1	03/05/1999
		AU 1998-92975 A1	03/05/1999
		AU 1998-95110 A1	03/05/1999
		AU 1999-16303 A1	28/06/1999
		AU 1999-19139 A1	16/08/1999
		AU 1999-19150 A1	05/07/1999
		AU 1999-22142 A1	16/08/1999
		AU 1999-24592 A1	16/08/1999
		AU 1999-28761 A1	27/09/1999
		AU 1999-32934 A1	20/09/1999
		AU 1999-47151 A1	07/02/2000
		AU 1999-50791 A1	06/12/1999
		AU 1999-52028 A1	06/12/1999
		AU 1999-60300 A1	03/04/2000
		AU 1999-60434 A1	17/04/2000
		AU 2000-18313 A1	19/06/2000
		AU 2000-29590 A1	12/07/2000
		AU 2000-31187 A1	12/07/2000
		AU 2000-59057 A1	13/02/2001
		AU 2000-66084 A1	05/03/2001
		AU 2000-69142 A1	26/03/2001
		AU 2000-71125 A1	10/04/2001
		AU 2000-74749 A1	10/04/2001
		AU 2000-78301 A1	30/04/2001
		AU 2001-13263 A1	05/03/2001
		AU 2001-14412 A1	30/05/2001
		AU 2001-18002 A1	12/06/2001
		AU 2001-20686 A1	09/07/2001
		AU 2001-241421 A8	20/08/2001
		AU 2001-27683 A1	07/08/2001
		AU 2001-27961 A1	20/08/2001
		AU 2001-30717 A1	30/04/2001
		AU 2001-34355 A1	03/07/2001
		AU 2001-34460 A1	20/08/2001
		AU 2001-36349 A1	27/08/2001
		AU 2001-41421 A1	20/08/2001
		AU 2001-61037 A1	24/12/2001
		AU 2001-62949 A1	24/12/2001
		AU 2001-66831 A1	02/01/2002
		AU 2001-68288 A1	17/12/2001
		AU 2001-69689 A1	14/01/2002
		AU 2001-76818 A1	24/12/2001
		AU 2001-76819 A1	24/12/2001
		AU 2001-76820 A1	24/12/2001
		AU 2001-76821 A1	02/01/2002
		AU 2001-78862 A1	14/01/2002
		AU 2001-90510 A1	08/01/2002
		AU 2001-94509 A1	02/01/2002

INTERNATIONAL SEARCH REPORT

Information on patent family members

International application No.
PCT/US2014/010902

Patent document cited in search report	Publication date	Patent family member(s)	Publication date
		AU 2001-96334 A1	22/04/2002
		AU 2002-14560 A1	15/05/2002
		AU 2002-15318 A1	15/05/2002
		AU 2002-239525 A8	18/06/2002
		AU 2002-306892 A8	08/10/2002
		AU 2002-324905 A8	24/03/2003
		AU 2002-332801 A8	18/03/2003
		AU 2002-336374 A8	18/03/2003
		AU 2002-353869 A1	17/06/2003
		AU 2002-355718 A8	17/02/2003
		AU 2002-39525 A1	18/06/2002
		AU 2003-212805 A1	04/09/2003
		AU 2003-223725 A1	11/11/2003
		AU 2003-228848 A1	11/11/2003
		AU 2003-228848 A8	11/11/2003
		AU 2003-230870 A1	27/10/2003
		AU 2003-230870 A8	27/10/2003
		AU 2003-237901 A1	31/12/2003
		AU 2003-237901 A8	31/12/2003
		AU 2003-249614 A1	12/12/2003
		AU 2003-249614 A8	12/12/2003
		AU 2003-261337 A1	16/02/2004
		AU 2003-261337 A8	16/02/2004
		AU 3634901 A	27/08/2001
		CA 2181598 A1	03/08/1995
		CA 2181598 C	27/03/2001
		CA 2322005 A1	10/09/1999
		CA 2322005 C	18/03/2003
		CA 2359225 A1	03/08/2000
		CA 2359225 C	07/04/2009
		CA 2363949 A1	31/08/2000
		CA 2377832 A1	01/02/2001
		CA 2390123 A1	07/06/2001
		CA 2457869 A1	13/03/2003
		CA 2458111 A1	13/03/2003
		CA 2458619 A1	13/03/2003
		CN 100508308 C	01/07/2009
		CN 100571959 C	23/12/2009
		CN 101160698 A0	09/04/2008
		CN 101194341 A0	04/06/2008
		CN 101194341 B	08/12/2010
		CN 102256429 A	23/11/2011
		CN 1295729 A0	16/05/2001
		CN 1365529 A0	21/08/2002
		CN 1390360 A0	08/01/2003
		CN 1402897 A0	12/03/2003
		CN 1522484 A	18/08/2004
		CN 1596492 A0	16/03/2005
		CN 1674205 A	28/09/2005
		CN 1742413 A	01/03/2006

INTERNATIONAL SEARCH REPORT

Information on patent family members

International application No.
PCT/US2014/010902

Patent document cited in search report	Publication date	Patent family member(s)	Publication date
		CN 1771072 A	10/05/2006
		CN 1771072 B	01/06/2011
		CN 1860343 A	08/11/2006
		CN 1886228 A	27/12/2006
		CN 1886872 A	27/12/2006
		EP 0741914 A1	29/12/2004
		EP 0741914 B1	27/07/2005
		EP 0981936 A1	01/03/2000
		EP 0990286 A1	05/04/2000
		EP 0992092 A1	12/04/2000
		EP 0992092 B1	23/04/2003
		EP 0992093 A1	12/04/2000
		EP 0992093 B1	07/05/2003
		EP 0993692 A1	19/04/2000
		EP 0993692 B1	26/12/2007
		EP 0995243 A1	26/04/2000
		EP 0998774 A1	10/05/2000
		EP 1002242 A2	24/05/2000
		EP 1002242 B1	05/07/2006
		EP 1010040 A1	21/06/2000
		EP 1010040 B1	24/06/2009
		EP 1012929 A2	28/06/2000
		EP 1019992 A1	19/07/2000
		EP 1019992 B1	14/06/2006
		EP 1019994 A1	19/07/2000
		EP 1019994 B1	11/08/2004
		EP 1021856 A1	26/07/2000
		EP 1027172 A1	16/08/2000
		EP 1027172 B1	26/12/2007
		EP 1028327 A2	16/08/2000
		EP 1028327 A3	19/11/2003
		EP 1028327 B1	25/01/2006
		EP 1028502 A2	16/08/2000
		EP 1028502 A3	16/08/2000
		EP 1028502 B1	24/10/2007
		EP 1037510 A2	20/09/2000
		EP 1037510 A3	02/01/2004
		EP 1038340 A1	27/09/2000
		EP 1040539 A1	04/10/2000
		EP 1040539 B1	10/11/2004
		EP 1047288 A2	25/10/2000
		EP 1047288 A3	02/01/2004
		EP 1047288 B1	10/06/2009
		EP 1054490 A2	22/11/2000
		EP 1054490 A3	24/01/2001
		EP 1054490 B1	28/07/2004
		EP 1060543 A1	20/12/2000
		EP 1060543 B1	16/07/2008
		EP 1075060 A2	07/02/2001
		EP 1075060 A3	07/02/2001

INTERNATIONAL SEARCH REPORT

Information on patent family members

International application No.
PCT/US2014/010902

Patent document cited in search report	Publication date	Patent family member(s)	Publication date
		EP 1075060 B1	26/03/2008
		EP 1075061 A2	07/02/2001
		EP 1075061 A3	07/02/2001
		EP 1075061 B1	23/04/2008
		EP 1080522 A1	07/03/2001
		EP 1100167 A2	16/05/2001
		EP 1100167 A3	27/03/2002
		EP 1100167 B1	28/07/2004
		EP 1101258 A1	23/05/2001
		EP 1101258 B1	11/05/2005
		EP 1109314 A1	20/06/2001
		EP 1118144 A1	25/07/2001
		EP 1119784 A1	01/08/2001
		EP 1147581 A1	24/10/2001
		EP 1147582 A1	24/10/2001
		EP 1151211 A1	07/11/2001
		EP 1151211 B1	29/03/2006
		EP 1151211 B8	07/06/2006
		EP 1155481 A1	21/11/2001
		EP 1155481 B1	13/03/2013
		EP 1159768 A1	05/12/2001
		EP 1203427 A1	08/05/2002
		EP 1203427 B1	06/10/2004
		EP 1206819 A1	22/05/2002
		EP 1218980 A1	03/07/2002
		EP 1218984 A1	03/07/2002
		EP 1218985 A1	03/07/2002
		EP 1218986 A1	03/07/2002
		EP 1218986 B1	08/10/2008
		EP 1224717 A1	24/07/2002
		EP 1224717 B1	04/05/2005
		EP 1226634 A1	31/07/2002
		EP 1232517 A1	21/08/2002
		EP 1234358 A1	28/08/2002
		EP 1234358 B1	06/01/2010
		EP 1240694 A1	18/09/2002
		EP 1240694 B1	22/11/2006
		EP 1252691 A1	30/10/2002
		EP 1252691 B1	17/11/2010
		EP 1256149 A1	13/11/2002
		EP 1256149 B1	25/07/2007
		EP 1258059 A1	20/11/2002
		EP 1258059 B1	23/04/2008
		EP 1258060 A1	20/11/2002
		EP 1258060 B1	06/08/2008
		EP 1287592 A1	05/03/2003
		EP 1297594 A1	02/04/2003
		EP 1297594 B1	15/08/2012
		EP 1303892 A1	23/04/2003
		EP 1303892 A4	25/01/2006

INTERNATIONAL SEARCH REPORT

Information on patent family members

International application No.
PCT/US2014/010902

Patent document cited in search report	Publication date	Patent family member(s)	Publication date
		EP 1303894 A1	23/04/2003
		EP 1305813 A1	02/05/2003
		EP 1310022 A2	14/05/2003
		EP 1310022 B1	24/08/2011
		EP 1323216 A1	02/07/2003
		EP 1330859 A1	30/07/2003
		EP 1330859 B1	20/12/2006
		EP 1330860 A1	30/07/2003
		EP 1330860 B1	17/06/2009
		EP 1330861 A1	30/07/2003
		EP 1339519 A2	03/09/2003
		EP 1340106 A2	03/09/2003
		EP 1340106 B1	09/01/2008
		EP 1366390 A2	03/12/2003
		EP 1373877 A1	02/01/2004
		EP 1373877 B1	24/01/2007
		EP 1378035 A1	07/01/2004
		EP 1378036 A1	07/01/2004
		EP 1378036 B1	01/04/2009
		EP 1378037 A1	07/01/2004
		EP 1378038 A1	07/01/2004
		EP 1380000 A2	14/01/2004
		EP 1382095 A1	21/01/2004
		EP 1386376 A1	04/02/2004
		EP 1386376 B1	01/09/2010
		EP 1386377 A1	04/02/2004
		EP 1386378 A1	04/02/2004
		EP 1391017 A1	25/02/2004
		EP 1402605 A1	31/03/2004
		EP 1407521 A1	14/04/2004
		EP 1407521 B1	16/05/2007
		EP 1412182 A2	28/04/2004
		EP 1421653 A1	26/05/2004
		EP 1430573 A1	23/06/2004
		EP 1436866 A2	14/07/2004
		EP 1438772 A2	21/07/2004
		EP 1438774 A2	21/07/2004
		EP 1438774 B1	24/02/2010
		EP 1449284 A1	25/08/2004
		EP 1449284 B1	16/09/2009
		EP 1458066 A2	15/09/2004
		EP 1458066 A3	19/04/2006
		EP 1540783 A4	19/04/2006
		EP 1712158 A1	18/10/2006
US 7244906 B2	17/07/2007	CN 101253019 A	27/08/2008
		CN 101253019 B	09/03/2011
		DE 112006002322 T5	10/07/2008
		GB 0803258 D0	02/04/2008
		GB 2443587 A	07/05/2008

INTERNATIONAL SEARCH REPORT

Information on patent family members

International application No.
PCT/US2014/010902

Patent document cited in search report	Publication date	Patent family member(s)	Publication date
		JP 2009-505843 A	12/02/2009
		KR 10-2008-0039453 A	07/05/2008
		TW I386270 B	21/02/2013
		US 2007-0045253 A1	01/03/2007
		WO 2007-027707 A1	08/03/2007
US 5593606 A	14/01/1997	CN 1213997 A0	14/04/1999
		EP 0771243 A1	09/01/2002
		EP 0787219 A1	06/05/1998
		EP 0787219 B1	11/11/1998
		EP 0900132 A1	03/04/2002
		EP 0900132 B1	25/06/2003
		JP 09-511791 A	25/11/1997
		JP 10-508798 A	02/09/1998
		JP 2000-511113 A	29/08/2000
		JP 2948915 B2	13/09/1999
		KR 10-0258286 B1	01/06/2000
		KR 10-0258287 B1	01/06/2000
		KR 10-0287526 B1	01/06/2001
		US 5614114 A	25/03/1997
		US 5841099 A	24/11/1998
		WO 96-02351 A1	01/02/1996
		WO 96-12830 A1	02/05/1996
		WO 97-44155 A1	27/11/1997
US 7027199 B2	11/04/2006	CN 101035647 A0	12/09/2007
		CN 101035647 B	17/10/2012
		GB 2428399 A	31/01/2007
		JP 2008-502010 A	24/01/2008
		JP 2011-085952 A	28/04/2011
		JP 4791457 B2	12/10/2011
		KR 10-1290665 B1	30/07/2013
		TW I384712 B	01/02/2013
		TW I385882 B	11/02/2013
		TW I395045 B	01/05/2013
		TW I396920 B	21/05/2013
		TW I396921 B	21/05/2013
		TW I396922 B	21/05/2013
		US 2005-0270629 A1	08/12/2005
		US 2005-0270630 A1	08/12/2005
		US 2005-0270631 A1	08/12/2005
		US 2005-0279807 A1	22/12/2005
		US 2005-0279808 A1	22/12/2005
		US 2006-0028710 A1	09/02/2006
		US 7019891 B2	28/03/2006
		US 7133182 B2	07/11/2006
		US 7133186 B2	07/11/2006
		US 7133187 B2	07/11/2006
		US 7133188 B2	07/11/2006
		WO 2005-121889 A2	22/12/2005

INTERNATIONAL SEARCH REPORT

Information on patent family members

International application No.
PCT/US2014/010902

Patent document cited in search report	Publication date	Patent family member(s)	Publication date
		WO 2005-121889 A3	19/10/2006
US 2007-0075063 A1	05/04/2007	AU 2006-299612 A1	12/04/2007
		CA 2624200 A1	12/04/2007
		EP 1931495 A2	18/06/2008
		EP 1931495 A4	26/08/2009
		US 7767930 B2	03/08/2010
		WO 2007-041460 A2	12/04/2007
		WO 2007-041460 A3	12/07/2007