Nov. 15, 1932. H. E. NICHOLS 1,888,139

INTERFERENCE ELIMINATOR FOR ELECTROCARDIOGRAPHS

Filed July 16, 1928

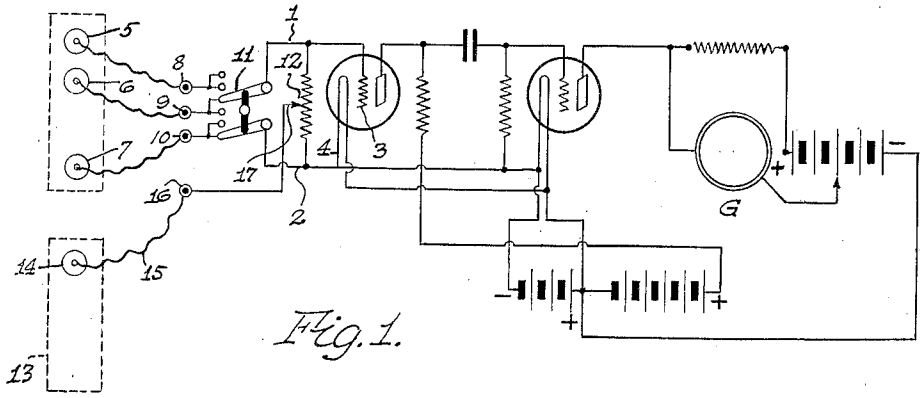

Fig. 1.

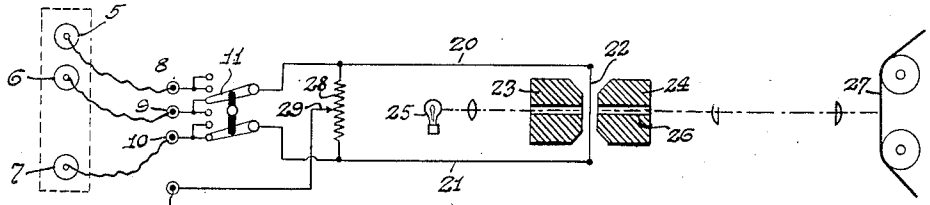

Fig. 2.

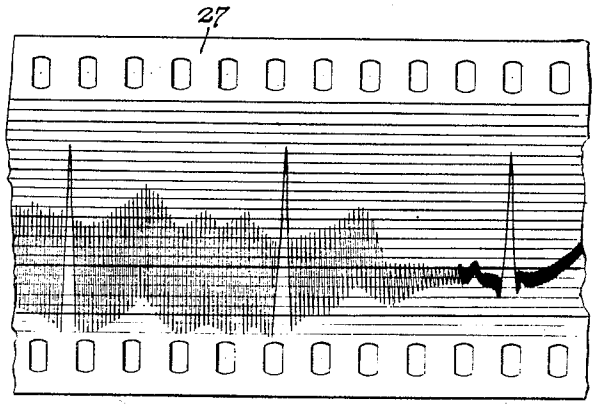

Fig. 3.

Inventor

Horace E. Nichols,

By Brickett & Brickett

Attorneys

Patented Nov. 15, 1932 1,888,139

UNITED STATES PATENT OFFICE

HORACE E. NICHOLS, OF DETROIT, MICHIGAN, ASSIGNOR TO CLINICAL DEVELOPMENT LABORATORIES, INC., OF DETROIT, MICHIGAN, A CORPORATION OF MICHIGAN

INTERFERENCE ELIMINATOR FOR ELECTROCARDIOGRAPHS

Application filed July 16, 1928. Serial No. 293,264.

The object of the present invention, as the title indicates, is to eliminate the interferences which ordinarily affect the operations of an electrocardiograph and render the readings therefrom inaccurate. This is the primary purpose of the invention, although it is also applicable to other electrical instruments wherein it is desired to suppress interference with respect to two terminals of a piece of apparatus.

This object is accomplished, generally speaking, by connecting a potentiometer across the input terminals of the electrocardiograph, and connecting the movable element of the potentiometer to a capacity which may conveniently be the operator of the instrument. The potentiometer further replaces, in most instances, the high resistance which is usually connected across the input terminals. By adjustment of the potentiometer, unequal voltages are impressed on the input terminals to the extent of compensating or suppressing the unequal voltages impressed on these parts by the interfering potentials.

The invention is fully disclosed by way of example in the following description and in the accompanying drawing, in which—

Figure 1 is a diagram of a vacuum tube electrocardiograph showing the invention applied thereto;

Fig. 2 is a similar diagram showing the invention applied to a string galvanometer instrument; and

Fig. 3 is an enlarged fragmentary detail view of the graph made by either instrument, the graph illustrating the effect of the adjustments of the invention in producing the eliminating action.

Reference to these views will now be made by use of like characters which are employed to designate corresponding parts throughout.

In Figure 1 is illustrated an electrocardiograph of known construction, the details of which need not be described, inasmuch as they constitute no part of this invention. It is however desirable to designate the input terminals by the numerals 1 and 2, the former being connected to the grid 3 of the amplifying tube, and the latter to the filament 4.

Three electrodes 5, 6 and 7 are applied to the patient and joined to terminals 8, 9 and 10 respectively comprised in the electrocardiograph. These terminals are in turn branched or split to form six points of a switch 11 having its terminals connected separately to the input terminals 1 and 2. The switch is of such a character that it permits any two of the electrodes 5, 6 and 7 to be electrically connected to the input terminals 1 and 2.

The instrument thus diagrammatically illustrated sufficiently to illustrate the application of the present invention, is designed to produce a graph record of the patient with the record of the type shown at the right of Fig. 3, the particular structure of the instrument for producing this result not being shown in Fig. 1, with the exception of that portion which leads to the grid 3 and filament 4 of the initial amplifying tube. With the electrodes connected up to the patient, and the instrument in proper operation, a graph such as shown at the right in Fig. 3 will be produced, the potentials present in the input lines coming from the patient through the active switch connections. If there be no outside interfering potentials present, as where the house wiring, for instance, is of the D. C. type, the graph record will present a true record such as shown at the right of Fig. 3. Where, however, there is present in the vicinity of the patient or the instrument, as where the house wiring is of the A. C. type, or where there are lines having sufficient power to produce a similar effect in the vicinity of the patient, there is likely to be set up, by induction, the conditions of an interference potential of the alternating type, and this outside potential, being impressed upon the input terminals 1 and 2, becomes active as a part of the potentials being recorded, with the result that the graph then would take on the characteristics shown at the left of Fig. 3, and be useless for diagnosing purposes.

Theoretically, it is assumed that this interference potential becomes impressed on the input terminals because of the following conditions: Assuming the source of the interference potential to be an A. C. wiring conductor in the vicinity of the patient or instru-

ment, it can be assumed that the ground becomes a pole of a circuit including such source, and the space therebetween, and which surrounds the patient and instrument and operator, produces the conditions of a potential gradient in which the amplitude of the sine wave will depend upon the distance any particular part may be positioned from the active source. For instance, should the patient be positioned so that the active electrodes be at different distances from the interfering source, the amplitude of the alterations would differ at the electrodes, although remaining in phase relationship. Hence, the potentials impressed on the input terminals by this condition would differ in amplitude with the result that a potential difference would be set up by the impressed potentials, although in phase relation, and this difference would become active within the instrument and produce the characteristics of the record at the left in Fig. 3, the greater the difference of potential thus impressed, the greater being the amplitude of the record produced. If there be no difference in potential, although the interference potentials be present in the input terminals, the interference potentials become inactive as a disturbing condition, and the graph will appear as at the right of Fig. 3. A similar effect could be produced by the location of the input terminals relative to the interference source.

It appears to be possible to produce this inactivity of the interference potentials by positioning the patient, instrument or operator in substantially the same potential gradient zone, but this is more or less difficult in service, and would require a lengthy period to produce as it would involve adjustments of these by a cut and try method. To avoid this, the present invention has been developed, the purpose of which is to render these interfering potentials inactive within the input terminals to the initial grid and filament.

The method used in producing this result is that of placing the unequal electrostatic potentials in balance in the two terminals rather than by attempting to suppress the potentials entirely. For instance, the general method employed in meeting the conditions of interfering potentials, is that of introducing a potential of opposite phase designed to balance the potential of a particular terminal, and thus render the interfering potential of that terminal inactive, as by producing a zero potential effect on that terminal; the opposite terminal being similarly treated, the interference is eliminated, due to the fact that it is made inactive on each terminal and hence has been completely suppressed. The present method, however, does not attempt to suppress the interfering potential of a terminal, that potential remaining, the invention being designed to so add or apply increments of potential to the input terminals as will make the interfering potential of one terminal equal to that of the other terminal, and thus eliminate the difference in potential between terminals that had been present initially, so far as these interfering potentials are concerned. To produce this result it is essential that the interference potentials being impressed on the terminals have the "in phase" relationship at the conclusion of the adjustments made, this relationship being present when the interfering potentials have been rendered inactive, thus being in contrast with the general methods referred to where the impressed potentials are of opposite phase at such time.

To produce this result, a high resistance potentiometer 12 is connected across the terminals 1 and 2, ordinarily replacing the usual high resistance in this position. The slider 17 of the potentiometer is connected to a suitable conductor 13 of electrostatic capacity, by means of an electrode 14, conductor 15, and terminal 16 of the slider. The conductor of electrostatic capacity is subject to approximately the same interference conditions as the patient and cardiograph, and since a single connection is employed in leading to the slider, the potentials delivered to the slider are similar in phase to those present in at least one of the terminals. This capacity 13 may be the operator of the instrument, this being of advantage because the two bodies—patient and operator—then more nearly approach each other in size, and enable a sufficient potential value to be obtained. By adjusting the slider 17 along the potentiometer, the capacity potentials are delivered to the terminals in the desired proportion to gradually set up this equality in interference potential between the two terminals.

In Fig. 3, for instance, the gradual decrease in amplitude of the interference potentials indicates the gradual adjustment of the slider 17, the amplitude decreasing as the difference in potential is decreased by the addition of increments of potential, until the point where this difference is reduced to practically zero, at which time the instrument record becomes that of the heart action of the patient, as indicated at the right of Fig. 3, the interfering potentials having become inactive to disturb the record, although still present within the terminals.

In other words, unlike the general methods employed, the present method does not attempt to suppress the interfering potentials on the terminals individually, but deals with both terminals collectively, by so adding increments of such potential as to set up an equality of interference potential value in the terminals and eliminate the difference in potential between the terminals so far as the interference potentials are concerned, thus

rendering the latter inactive as a disturbing influence in obtaining the desired record from the instrument.

As will be understood, the presence of the interference potentials on the terminals becomes manifest in the action of the grid and filament because of the difference in value of the potentials on these elements, a difference which is indicated, for instance, by the galvanometer G in Fig. 1. With the potentials balanced by the adjustment of the slider 17, the action of the grid and filament will become the normal action of the instrument where no interference is present, and the change will become manifest in the galvanometer.

The invention is not limited to the use of a resistance potentiometer. Other forms of potentiometers may be used, such as those of the variometer, inductance and capacitative types. The word "potentiometer" is intended to have this general meaning throughout the specification and claims, except where definitely restricted.

As will be understood, the presence on the terminals of the interfering potentials becomes active on the grid and filament. If there is a difference in such potentials, such difference will be present within the grid and filament, and become manifest on the galvanometer G. When, however, the adjustment of slider 17 produces the equality of interfering potentials within the terminals, this balanced condition will be made manifest within the grid and filament so that they become ineffective to vary the conditions produced by the desired potentials produced by the patient, and the instrument will produce the true record.

The added increments may be considered as being inversely proportional to the interference potentials impressed upon the terminals by the disturbing conditions, and being relatively applied so as to produce the resultant equality. The addition may be to either or both terminals, as required, the question of the amplitude of the resultant potentials being immaterial as long as the resultant potentials of both terminals is equal, since the inactivity of the potentials depends upon the elimination of the difference of interference potential between the terminals, and when this elimination is had, the magnitude of the resultant potentials is immaterial.

The balancing of the disturbing potentials is generally ascertained by visual observation, as by inspection of the graph as before explained or of the galvanometer, for instance. Instead of making the visual observation on the developed strip 27, we may use a mirror which reflects the galvanometer beam on a visible surface. The appearance of the beam on the surface in the absence of interference is known, and the potentiometer is adjusted until this appearance is established as well as can be determined by the eye. This manner of adjustment is sufficiently accurate for many purposes, but if still more accurate adjustment is desired, the beam may be cast upon a strip 27 which is exposed and developed at intervals until a satisfactory graph is obtained.

In adjusting the potentiometer, the relative position of the operator and the patient must be considered in order that the interfering potential may be suppressed. In some relations of the operator to the patient, it may not be possible to adjust the potentiometer to equalize the potentials of the filament and grid. This difficulty is however overcome by the operator moving himself, or if necessary, himself and the instrument, to a new position, until he finds a position wherein the range of the potentiometer enables complete suppression of the interfering potentials.

In setting up the apparatus care should be taken that the neutralizing potential is in phase with the potential to be suppressed. A slight phase displacement will make it impossible to completely suppress the disturbing potential. The potentiometer itself, if of the resistance type, should be of very high resistance in order to replace the usual high resistance now used across the input terminals; otherwise additional resistance should be inserted to make up the proper amount. In the event that the use of a very high resistance potentiometer makes it impossible to completely neutralize the interfering potentials, it may be necessary to connect the movable element of the potentiometer to a body having a greater surface of electrostatic capacity than that of the operator alone.

Figure 2 illustrates the invention applied to a string galvanometer electrocardiograph wherein the input terminals 20 and 21 are joined to a string 22 which extends between the poles 23 and 24 of the galvanometer, and wherein a lamp 25 projects light through apertures 26 in the poles upon a moving sensitized strip 27. The strip, after exposure to either type of apparatus and developing, is shown in Figure 3. As in Figure 1, a potentiometer resistance 28 is connected across the terminals 20 and 21 and has its movable element 29 electrically connected to the operator. The switch connections from the patient to the input terminals are the same as in Figure 1.

Although specific embodiments of the invention have been illustrated and described, it will be understood that various alterations in the details of construction may be made without departing from the scope of the invention as indicated by the appended claims.

What I claim is:—

1. In apparatus having an element responsive to changes in the difference of potential across its terminals, and wherein the terminals are subject to the activity of alternating potential interference, the method of eliminating such interference potential activity which consists in retaining the interfering potenials in the respective terminals and augmenting the potential values of the respective terminals from a collector independent of the terminals and subject to such interference potential and in regulated amount such as to equalize the interfering potential value relationship between the terminals and establish an in-phase relationship therebetween.

2. In apparatus having an element responsive to changes in the difference of potential across its terminals, and wherein the terminals are subject to the activity of alternating potential interference, the method of eliminating such interference potential activity which consists in augmenting the individual interfering potential of the respective terminals from a collector independent of the terminals and subject to such interference potential and by potential values such that the combined values of the source interference potential and the augmenting potential of a terminal will equal and be in phase with the similar potentials of another terminal.

3. In apparatus having an element responsive to changes in the difference of potential across its terminals, and wherein the terminals are subject to the activity of alternating potential interference, the method of eliminating such interference potential activity which consists in applying incremental potential to the respective terminals from a collector independent of the terminals and subject to such interference potential and in amounts to render the collective interfering potential relationship similar in phase and of equal potential value in the respective terminals.

4. In apparatus having an element responsive to changes in the difference of potential across its terminals, and wherein the terminals are subject to the activity of alternating potential interference, the method of eliminating such interference potential activity which consists in adding increments of interference potential values to the respective terminals from a collector independent of the terminals and subject to such interference potential and in regulated amounts sufficient to establish an in-phase relationship of the interference potential within the terminals and with the values of the active interference potentials equal in the respective terminals.

5. In apparatus having an element responsive to changes in the difference of potential across its terminals, and wherein the terminals are subject to the activity of alternating potential interference, the method of eliminating such interference potential activity which consists in applying regulated increments of potential to the respective terminals from a capacity source in the form of a collector independent of the terminals and subject to such interference potential and in phase with the interfering potentials, the regulation being such as to produce an in-phase relationship of interference potential values equal in amount in the respective terminals.

6. A method as in claim 5 characterized in that the capacity source remains constant in value and the regulation is active to apply increments from the source to the respective terminals in relative amounts sufficient to establish the equality of interference potential values in the terminals.

7. As a means for eliminating alternating potential interference in apparatus responsive to changes in the difference of potential across its terminals, a potentiometer connected across the terminals and having its movable element connected to a collector independent of the terminals and subject to the interfering potential and in phase therewith, said element being adjustable to cause an in-phase relationship of equal amounts of interference potential within the terminals.

8. As a means for eliminating the activity of alternating potential interference in apparatus having an element responsive to changes in the difference of potential across the terminals of the apparatus, a potentiometer connected across said terminals and having a movable element, and means operatively connected to said element for rendering a capacity in the form of a collector independent of the terminals and active with the potentiometer at will and positioned to cause the capacity to be subject to such interfering potential and in phase therewith, adjustment of the movable element in presence of such capacity activity being operative to cause an in-phase relationship of interference potential values equal in amount in the respective terminals.

In testimony whereof I affix my signature.

HORACE E. NICHOLS.