J. A. LAFORE.

METHOD OF AND APPARATUS FOR COMPRESSING ELASTIC FLUID.

APPLICATION FILED NOV. 25, 1914.

1,195,691.

Patented Aug. 22, 1916.

2 SHEETS—SHEET 1.

FIG. 1.

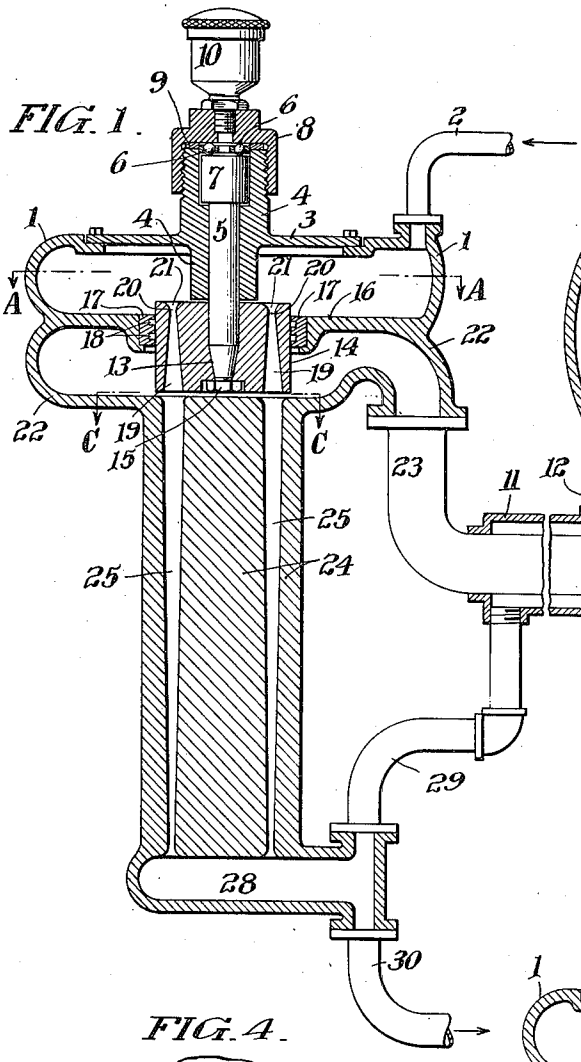

FIG. 2.

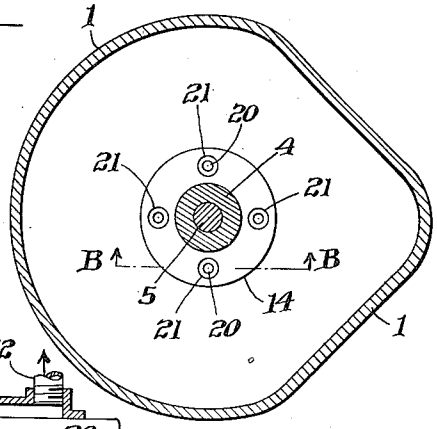

FIG. 3.

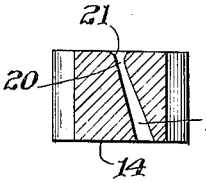

FIG. 4.

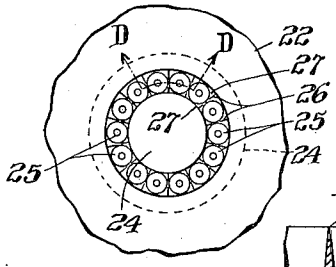

FIG. 5.

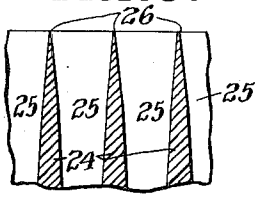

FIG. 6.

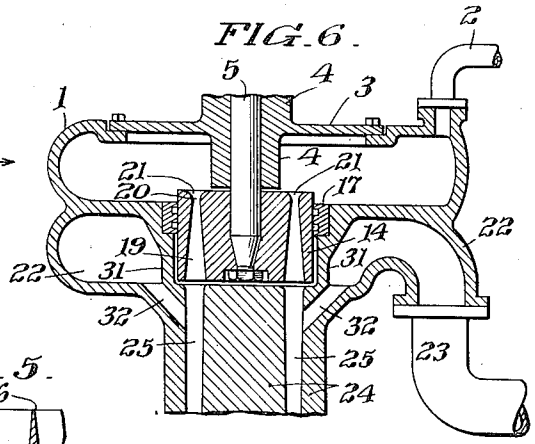

WITNESSES

Daniel Webster, Jr.

Freda Field

INVENTOR

John A. Lafore

BY Cornelius D. Ekert

His ATTORNEY

J. A. LAFORE.

METHOD OF AND APPARATUS FOR COMPRESSING ELASTIC FLUID.

APPLICATION FILED NOV. 25, 1914.

1,195,691.

Patented Aug. 22, 1916.

2 SHEETS—SHEET 2.

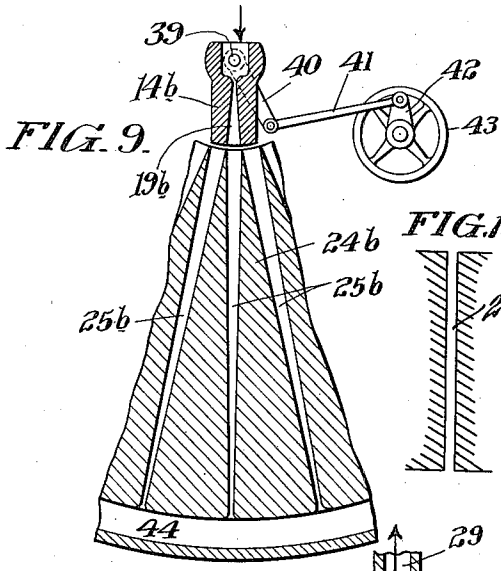

FIG. 9.

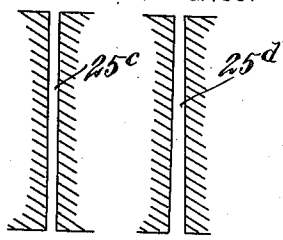

FIG. 10. FIG. 11.

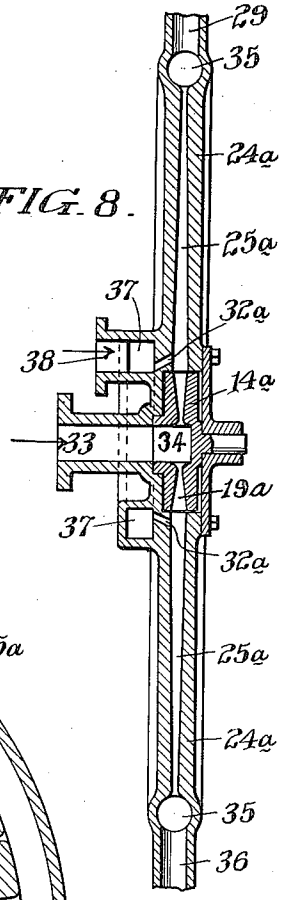

FIG. 8.

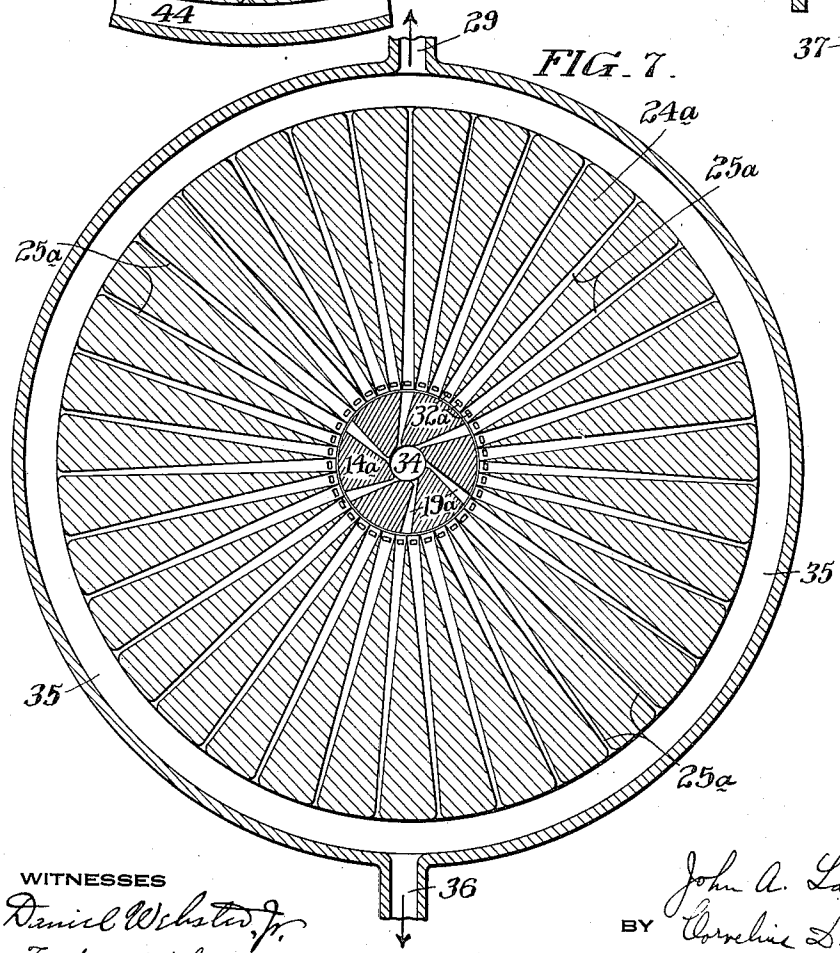

FIG. 7.

WITNESSES

Daniel Webster, Jr.

Freda Field

INVENTOR

John A. Lafore

BY Cornelius D. Ehret

Jr ATTORNEY

UNITED STATES PATENT OFFICE.

JOHN A. LAFORE, OF ARDMORE, PENNSYLVANIA.

METHOD OF AND APPARATUS FOR COMPRESSING ELASTIC FLUID.

1,195,691. Specification of Letters Patent. Patented Aug. 22, 1916.

Application filed November 25, 1914. Serial No. 873,874.

To all whom it may concern:

Be it known that I, JOHN A. LAFORE, a citizen of the United States, residing in Ardmore, in the county of Montgomery and State of Pennsylvania, have invented new and useful Improvements in Methods of and Apparatus for Compressing Elastic Fluid, of which the following is a specification.

My invention relates to apparatus in the nature of a pump or compressor for increasing the pressure of air, gas, or the like, as from atmospheric pressure to higher pressure, or from pressure below atmospheric to atmospheric pressure or higher. And when operating upon air or gas at lower than atmospheric pressure, the apparatus may be employed for exhausting the air or gas from a steam condenser or the like.

To these ends I provide an apparatus in which steam or other elastic fluid is allowed to expand, as in expansion nozzles, thereby increasing the velocity of the steam or elastic fluid which then entraps the air or gas to be compressed or raised in pressure, or air or gas mixed with vapor, as present in a steam condenser, the entrapped air or gas, or air and gas or vapor being forced by the velocity of the steam through a nozzle or nozzles, which preferably contract in the direction of movement of the steam, with resultant reduction of velocity but increase in pressure. And the entrapped air, gas, vapor or elastic fluid may preferably be at such temperature as to prevent condensation of the steam.

As a further feature of my invention, the steam expansion nozzle or nozzles may rotate with respect to compression nozzle or nozzles for the purpose of producing intermittent masses of steam between which the air or gas, or air or gas with vapor, is entrapped. And such rotation may be procured by the action of the steam itself, or by driving the rotary element by a separate source of power, such as a small steam turbine, electric motor, belt and pulley, or any other suitable device.

My invention resides also in the method of compressing gas, or gas and vapor, or a vapor, steam or elastic fluid, by imparting to an elastic fluid, such as steam, a high velocity, and while traveling at high velocity, entrapping between successive masses thereof the elastic fluid, vapor, gas or mixtures of them, and, preferably, thereafter decreasing the velocity with attendant increase in pressure.

For an illustration of some of the forms my invention may take, reference is to be hand to the accompanying drawings, in which:

Figure 1 is a sectional view through an apparatus embodying my invention. Fig. 2 is a sectional view taken on the line A—A of Fig. 1. Fig. 3 is a sectional view, partly in elevation, taken on the line B—B of Fig. 2. Fig. 4 is a plan view taken on the line C—C of Fig. 1. Fig. 5 is a fragmentary sectional view, on enlarged scale, taken on the line D—D of Fig. 4. Fig. 6 is a fragmentary sectional view illustrating a modification of the structure of Fig. 1. Fig. 7 is a sectional view taken through a modified form of apparatus in which the passages extend substantially at right angles to the axis of rotation of the rotary element. Fig. 8 is a cross sectional view taken at right angles to Fig. 7. Fig. 9 is a fragmentary view of a further modification of apparatus in which the movable member oscillates. Fig. 10 illustrates a modified form of nozzle of substantially uniform cross section. Fig. 11 illustrates a modified form of nozzle which increases slightly in cross section from its receiving to its discharge end.

Referring to Figs. 1 to 5 inclusive, 1 is a steam chest or chamber connected by pipe 2 with a boiler or any other source of steam or other elastic fluid under pressure. The elastic fluid delivered through the pipe 2 to the chamber 1 may be live steam, direct from a boiler, or it may be low pressure steam or exhaust steam.

Upon the casing or chest 1 is secured the head or cover 3 having the central boss 4 through which extends the rotatable shaft 5 having a ball bearing 6 between the shaft shoulder 7 and the cap 8 screw threaded upon boss 4 and between which and the end of the hub 4 is confined a gasket or packing 9, the grease or oil cup 10 being carried by the cap 8 and communicating with the cavity in the hub 4. The lower end of the shaft 5 is tapered at 13 to fit a correspondingly tapered socket in the rotary member 14 secured to the shaft 5, as by nut 15 threaded onto the lower end of the shaft 5 and engaging the member 14.

The chest 1 has a bottom wall 16 having a central aperture in which is disposed the

stuffing box ring 17, having the channels 18, such ring or any other equivalent ring, such as used in steam turbine practice, for example, serving to prevent leakage of steam from chamber 1 along the outer surface of the member 14 which rotates in contact or substantial contact with the ring 17.

In the member 14 are disposed any suitable or desirable number of expansion nozzles 19 whose axes are straight, but preferably inclined, as indicated in Fig. 3. These nozzles increase in cross section from their smallest section at 20 to the lower surface or edge of the member 14 and above their smallest areas or sections 20 they are enlarged, as indicated at 21, as with curving or tapering side walls, to prevent steam or fluid eddies at the entrance to the nozzles.

The nozzles 19 are inclined or slanted, as indicated in Fig. 3, when the member 13 is to be rotated by the action of the steam or fluid in passing through such nozzles. It will be understood, however, that the axes of these nozzles may be straight or parallel with the axis of rotation when the member 14 is driven by some other means, as by a pulley or belt, small steam turbine, electric motor, or the like, in which case the shaft 5 will extend to the exterior of the apparatus and be connected to such driving means.

Beneath the chest or chamber 1 is a second chamber or chest 22, which may be of annular or other suitable form, the chamber 22 being connected by pipe 23 with the space in which the air or gas, or air or gas and vapor to be compressed is contained. For example, the pipe 23 may connect with the interior of a steam condenser from which the air or other gas is to be exhausted, in order to maintain a vacuum within the condenser. This pipe 23 may connect with the air space of the condenser, so that only air or air with entrained moisture or vapor will pass into the chamber 22. However, it will be understood that my invention is not limited to the quantity of vapor or moisture carried or mixed with the air delivered to the chamber 22.

Disposed below the chamber or chest 22, and secured thereto or integral therewith, is the member 24 having the compression nozzles or channels or tubes 25 which diminish in area or cross section from the top to the bottom as shown, the entrances to and exits from these nozzles being preferably slightly expanded or opened to prevent eddies. The axes of these nozzles are preferably straight, and are preferably parallel with each other and with the axis of rotation of the member 14, though it will be understood that the axes of the nozzles 25 may be inclined, and their inclinations may be opposite to that of the nozzles 19 of member 14.

The entrances to the nozzles 25 may be formed as indicated in Fig. 5, these entrances being shown as disposed between the radially extending edges or ribs 26 and between the arc shaped edges 27. It will be understood, however, that my invention is not limited to the employment of such entrances and exits for the nozzles 25.

The nozzles 25 discharge directly into the open atmosphere or into any container, as a chamber 28 secured to or integral with the member 24. This chamber 28 may have an upper outlet through pipe 29 communicating directly with atmosphere or with any container in which the compressed gas is to be confined. And the chamber 28 may have a further bottom outlet through pipe 30 through which may be carried off water of the condensed steam or any other liquid present.

To prevent or lessen condensation of steam delivered by nozzle 19 and coming into contact with the air or other medium to be compressed, such air or other medium may be heated to suitable temperature by any suitable means. For such purpose the steam or other hot material discharged through pipe 29 may be delivered into heating jacket 11 surrounding or otherwise disposed with respect to pipe 23 and finally discharged through pipe 12. However, live or exhaust steam or other suitable heating agent may be delivered to jacket 11.

The member 24 may have heat communicated thereto as by a steam jacket surrounding the same.

The operation is as follows: Upon admission of steam through pipe 2 into the chest 1 the steam will pass into and through the nozzles 19. These nozzles 19 are of the type known as expansion nozzles, with the result that the steam entering the nozzles 19 under a given pressure will leave the lower ends of the nozzles 19 at lower pressure, but at high velocity. The steam will then enter into the compression nozzles 25 at high velocity, and in passing through the nozzles the velocity will decrease and the pressure of the steam will again increase or tend to increase. Due to the rotation of the member 14 in which the nozzles 19 are disposed, such rotation being effected by the action of the steam itself by a structure similar to that illustrated in Fig. 3, or by external motive power, a given nozzle 19 will pass in rapid succession over the entrances to the nozzles 25 delivering into each a mass of elastic fluid or steam; and then the next following nozzle 19 will at a slight interval of time later deliver into each of these nozzles 25 a second mass of steam or elastic fluid, with the result that to the nozzles 25 will be delivered in rapid succession masses of steam at high velocity, these masses traveling longitudinally of the nozzles 25 and being correspondingly com-

pressed and reduced in speed. Between these successive masses of steam in the nozzles 25 will be entrapped air or gas, or air or gas with vapor or moisture, delivered to the chamber 22 by pipe 23, such air or gas, or a mixture with vapor, being drawn into the nozzles 25 between successive masses of steam thrown or injected into them from the nozzles 19 in member 14. The result is that these masses of steam entering the nozzles 25 at high velocity pass along these nozzles 25 separated by small masses of air or gas, or air or gas with vapor or moisture, the speed of these masses decreasing toward the lower ends of the nozzles 25 with simultaneous increase in pressure, the gas or air, or gas or air with vapor, being delivered from the nozzles 25 directly into the atmosphere, or into the chamber 28, at pressure higher than exists in the chamber 22 or in the condenser or other space with which the pipe 23 communicates.

By this construction, therefore, air or gas of a given pressure may be compressed to higher pressure. Ordinarily, in a condenser there is a pressure below that of the atmosphere, that is, a partial vacuum, and the air is by the apparatus described exhausted from the condenser, so as to maintain the desired vacuum therein.

Instead of forming communication between the nozzles 25 and the chamber 22 through or at the clearance space between the member 14 and the top of the member 24, communication may be effected by an arrangement such as illustrated in Fig. 6. Here the parts are similar to those in Fig. 1, except that in the chamber 22 there is an annular wall 31 surrounding the member 14, and a passage or port 32, for each nozzle 25, communicates with each nozzle 25 and with the interior of the chamber 22 outside of the wall 31. In this case the clearance between the rotary member 14 and the top of the member 24 may be made smaller, and as small as desired. The nozzles 19 deliver steam or elastic fluid at high velocity into the nozzles 25, as before, but the air or gas, or air or gas mixed with vapor or moisture, is admitted to the nozzles 25, between successive masses of steam injected therein from nozzles 19, through these ports or passages 32. Otherwise, the operation is the same as described in the operation of the apparatus in Fig. 1.

In the construction shown in Figs. 7 and 8, the steam or elastic fluid under pressure is admitted through the passage 33 into the interior of the rotary member 14^a to the space 34 with which communicate the expansion nozzles 19^a which may extend radially of the rotary member 14^a when the latter is driven by pulley or other suitable means, or which extend at an angle, as indicated in Fig. 7, so that the steam itself rotates the member 14^a in a counter-clockwise direction, as viewed in Fig. 7. Disposed around the member 14^a is the member 24^a in which are the nozzles 25^a with their axes either radial or inclined, whose outer ends communicate with the discharge casing 35 having an outlet 36. The annular chamber 37 communicates through the connection 38 with the condenser or other source of gas, vapor, or elastic fluid which is to be raised in pressure. Communicating with the nozzles 25^a are the ports 32^a which also communicate with the annular chamber 37, so that the medium to be compressed is admitted into the nozzles 25^a in much the same manner as illustrated in Fig. 6. It will be understood, however, that the ports 32^a may be omitted and that the annular chamber 37 may communicate with the clearance space between the member 14^a and the member 24^a, in which case the medium to be compressed will pass into the nozzles 25^a through the clearance space in much the same manner as described in connection with Fig. 1.

In Fig. 9 the member 14^b, having the expansion nozzle 19^b, oscillates upon the shaft or pivot 39, the member 14^b being oscillated backwardly and forwardly by the crank 40 pivoted to the connecting rod 41 which is in turn pivoted to the crank 42 rotated by the pulley 43 or by any suitable motor. The member 14^b is oscillated in close proximity to the member 24^b in which are disposed the nozzles 25^b communicating with the discharge chamber 44. It will be understood, of course, that the nozzle 19^b communicates with the source of steam or other elastic fluid under pressure and that the medium to be compressed is admitted to the nozzles 25^b through the clearance space between members 14^b and 24^b. Or ports, like ports 32 of Fig. 6 and 32^a of Figs. 7 and 8 may communicate with the upper ends of the nozzles 25^b, and these ports may be connected to the source of the medium to be compressed.

While in the foregoing description the nozzles 25, 25^a and 25^b are shown of diminishing cross section in the direction of flow of steam therethrough, it will be understood that these nozzles may be tapered to different degree than shown, that is, either greater or less degree, and may, if suitable, be substantially uniform in cross section throughout their lengths as indicated at 25^c, Fig. 10, or even slightly tapered in opposite direction, that is, tapered in such way that the cross section at their discharge ends may be greater than their cross section at their inlet ends, as indicated at 25^d, Fig. 11, where the lower or discharge end of the nozzle is of greater cross section than at the upper or inlet end.

It will be understood that my invention is

not limited as to the position of the parts illustrated; that is, the axis of rotation or oscillation of the movable member may be vertical or may be horizontal, or may take any other suitable position.

It is to be understood that I do not wish to be limited to the proportions illustrated in my drawings, which are largely illustrative of the principles of my invention.

What I claim is:

1. The method of compressing gas, vapor or elastic fluid, which consists in producing a succession of masses of elastic fluid diminishing in velocity and increasing in pressure, and entrapping between and carrying with said masses of elastic fluid masses of gas, vapor or elastic fluid.

2. The method of compressing gas, vapor or elastic fluid, which consists in expanding elastic fluid under pressure to increase its velocity, breaking said elastic fluid into separated masses while traveling at high velocity, progressively decreasing the velocity and increasing the pressure of said elastic fluid, and while said masses of elastic fluid are traveling at high velocity entrapping between them gas, vapor, or elastic fluid to be compressed.

3. The method of compressing gas, vapor or elastic fluid, which consists in entrapping between successive masses of elastic fluid at high velocity masses of gas, vapor or elastic fluid to be compressed, and diminishing the velocity and increasing the pressure of the traveling masses.

4. The method of compressing gas, vapor or elastic fluid, which consists in dividing the same into separated masses, and moving said masses by elastic fluid engaging directly therewith and increasing in pressure.

5. Apparatus for compressing elastic fluid comprising a member having a passage, a source of elastic motive fluid under pressure, means for producing in said passage separated masses of said elastic motive fluid, and means for delivering elastic fluid to be compressed into said passage, said passage diminishing in cross section in the direction of passage of said motive fluid therethrough.

6. In apparatus of the character described, the combination with relatively moving expansion and compression nozzles, of means delivering elastic fluid under pressure into the expansion nozzle which delivers the same at high velocity into the compression nozzle, and means for admitting into said compression nozzle gas, vapor, or elastic fluid to be compressed.

7. In apparatus of the character described, the combination with relatively moving expansion and compression nozzles, of means delivering elastic fluid under pressure into the expansion nozzle which delivers the same at high velocity into the compression nozzle, and means for admitting into said compression nozzle between its inlet and outlet gas, vapor or elastic fluid to be compressed.

8. In apparatus of the character described, the combination with a rotatable member having an expansion nozzle therein, means for admitting elastic fluid under pressure into said nozzle which delivers the same at high velocity, said nozzle being suitably disposed with respect to the axis of rotation of said member for causing rotation of said member by passage of elastic fluid therethrough, a coöperating member having a compression nozzle, and means for admitting into said compression nozzle gas, vapor, or elastic fluid to be compressed.

9. The method of compressing gas, vapor or elastic fluid, which consists in expanding elastic fluid under pressure to increase its velocity, breaking said elastic fluid into separated masses while traveling at high velocity, and while said masses of elastic fluid are traveling at high velocity entrapping between them heated gas, vapor or elastic fluid.

10. In apparatus of the character described, the combination with an expansion nozzle, of a relatively moving nozzle, means delivering elastic fluid under pressure into the expansion nozzle which delivers the same at high velocity into the other nozzle, means for heating gas, vapor or elastic fluid to be compressed, and means for admitting the heated gas, vapor or elastic fluid into said other nozzle.

11. The method of compressing elastic fluid, which consists in expanding an elastic motive fluid and thereafter increasing its pressure, dividing said elastic motive fluid into successive masses, and admitting elastic fluid to be compressed between said masses of elastic motive fluid during the period when said elastic motive fluid is expanded and increased in pressure.

12. Apparatus for compressing elastic fluid comprising expansion and compression nozzles, means delivering elastic motive fluid under pressure to the expansion nozzle which expands and delivers the same into said compression nozzle, means for dividing said elastic fluid into separated masses, and means for admitting into said compression nozzle elastic fluid to be compressed.

13. Apparatus for compressing elastic fluid comprising expansion and compression nozzles, means delivering elastic motive fluid under pressure to the expansion nozzle which expands and delivers the same into said compression nozzle, means for dividing said elastic fluid into separated masses, and means for admitting into said compression nozzle between its inlet and outlet elastic fluid to be compressed.

14. Apparatus for compressing elastic fluid comprising a member having a passage, a source of elastic motive fluid under pressure, means for producing in said passage

separated masses of said elastic motive fluid, means for delivering elastic fluid to be compressed into said passage, said passage diminishing in cross section in the direction of passage of said motive fluid therethrough, and means for heating said elastic fluid to be compressed before its admission to said passage.

15. Apparatus for compressing elastic fluid comprising a member having a passage, a source of elastic motive fluid under pressure, means for producing in said passage separated masses of said elastic motive fluid, means for delivering elastic fluid to be compressed into said passage, said passage diminishing in cross section in the direction of passage of said motive fluid therethrough, and means for transferring to said elastic fluid to be compressed before its admission to said passage heat of fluid delivered from said passage.

16. Apparatus for compressing elastic fluid comprising a member having a plurality of passages diminishing in cross section between their inlets and outlets, a source of elastic fluid under pressure, a rotatable member having a plurality of passages communicating in succession with the passages in said first named member, elastic motive fluid under pressure being delivered from said source through the passages in said rotating member to said passages in said first named member, and means for admitting elastic fluid to be compressed into said passages in said first named member.

17. Apparatus for compressing elastic fluid comprising a member having a plurality of passages diminishing in cross section between their inlets and outlets, a source of elastic fluid under pressure, a rotatable member having a plurality of passages communicating in succession with the passages in said first named member, elastic motive fluid under pressure being delivered from said source through the passages in said rotating member to said passages in said first named member, means for admitting elastic fluid to be compressed into said passages in said first named member, and a casing into which said passages in said first named member discharge.

18. Apparatus for compressing elastic fluid comprising a member having a plurality of passages diminishing in cross section between their inlets and outlets, a source of elastic fluid under pressure, a rotatable member having a plurality of passages communicating in succession with the passages in said first named member, elastic motive fluid under pressure being delivered from said source through the passages in said rotating member to said passages in said first named member, means for admitting elastic fluid to be compressed into said passages in said first named member, a casing into which said passages in said first named member discharge, and a plurality of outlets from said casing.

19. Apparatus for compressing elastic fluid comprising a member having a plurality of passages diminishing in cross section between their inlets and outlets, a source of elastic fluid under pressure, a rotatable member having a plurality of passages communicating in succession with the passages in said first named member, elastic motive fluid under pressure being delivered from said source through the passages in said rotating member to said passages in said first named member, and means for admitting elastic fluid to be compressed into said passages in said first named member, said passages in said rotating member constituting expansion nozzles.

In testimony whereof I have hereunto affixed my signature in the presence of the two subscribing witnesses.

JOHN A. LAFORE.

Witnesses:

ALICE S. MARSH,

ANNA M. ZORN.