HIGH-PRESSURE CONTAINER

Filed Aug. 27, 1964

FIG. 1

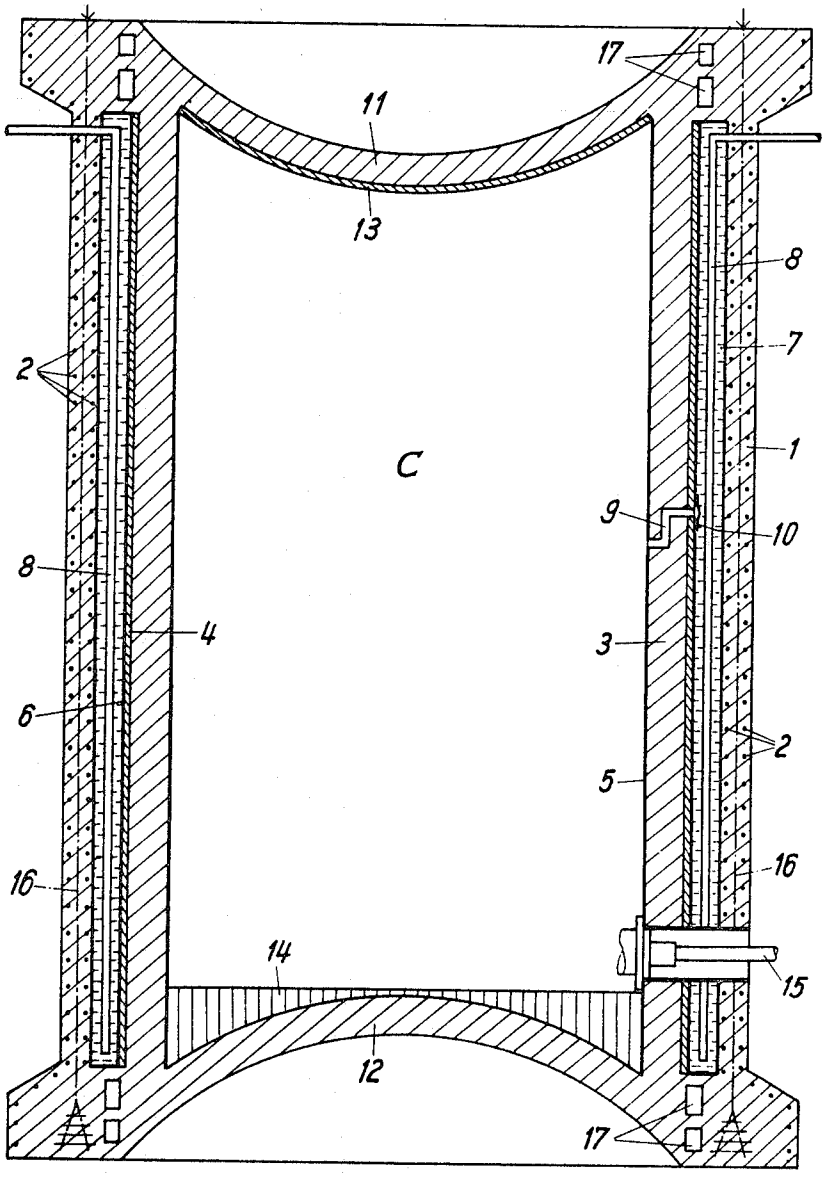

Inventors:
Ferdinand Bremer
Joachim Meyer

HIGH-PRESSURE CONTAINER

Filed Aug. 27, 1964

FIG.2

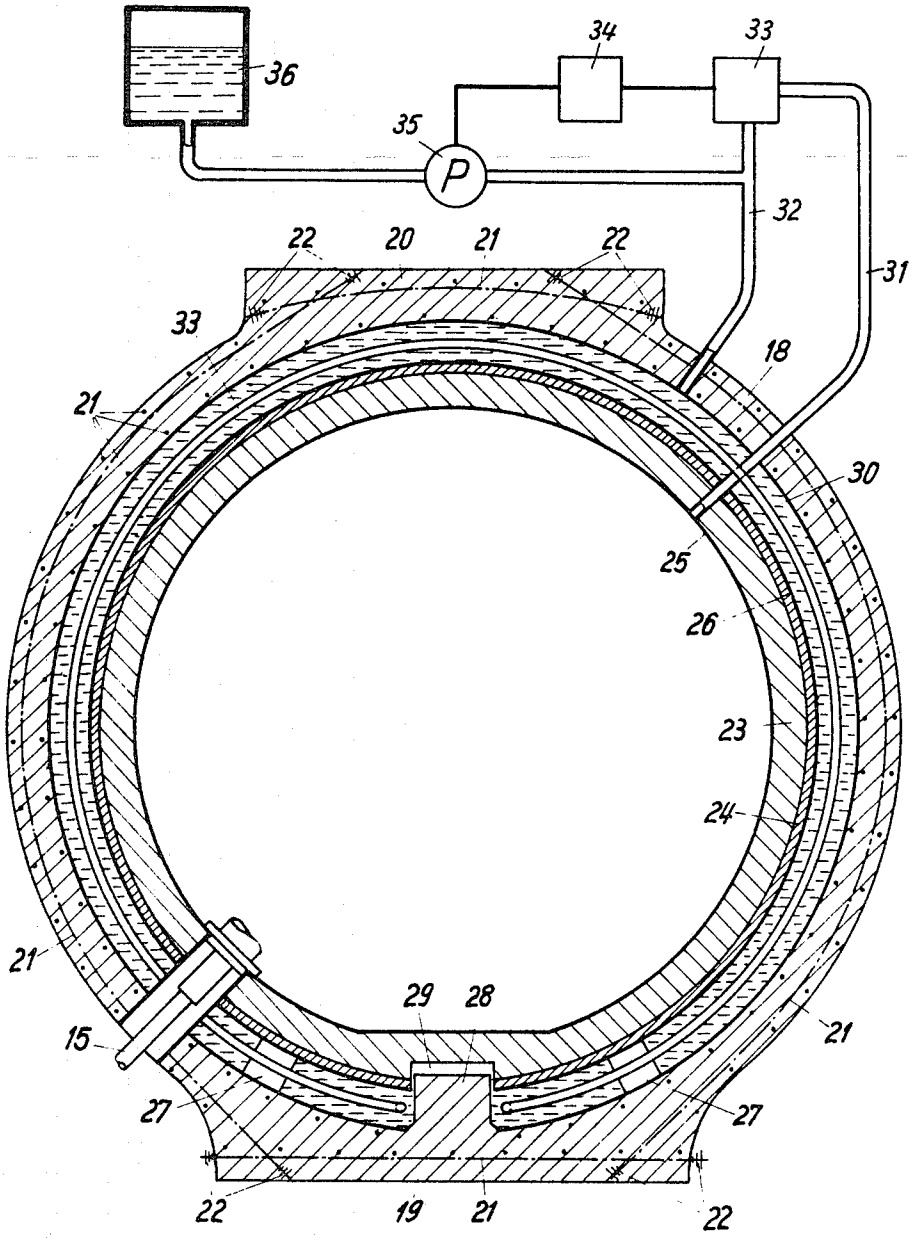

Inventors:
Ferdinand Bremer
Joachim Meyer

United States Patent Office

3,443,631

Patented May 13, 1969

1

3,443,631
HIGH-PRESSURE CONTAINER

Ferdinand Bremer, Essen-Bredeney, and Joachim Meyer, Essen, Germany, assignors to Beteiligungs- und Patentverwaltungsgesellschaft mit beschrankter Haftung, Essen, Germany

Filed Aug. 27, 1964, Ser. No. 392,517
Claims priority, application Germany, Sept. 19, 1963, B 73,573
Int. Cl. F24h *3/00*
U.S. Cl. 165—47 9 Claims

The present invention relates to containers for high inner pressure, especially pressure containers for core reactors.

It is an object of the present invention economically so to design containers for high inner pressure that the inner pressure will not only be safely absorbed but that also damages due to the special properties of the container contents will be safely avoided.

It is another object of this invention to provide a container as set forth in the preceding paragraph which can be readily constructed at relatively low costs.

These and other objects and advantages of the invention will appear more clearly from the following specification in connection with the accompanying drawings, in which:

FIG. 1 illustrates a vertical section through a cylindrical pressure container according to the present invention.

FIG. 2 is a cross section through a spherical pressure container according to the present invention.

With pressure containers, especially for core reactors, it is of foremost importance that the wall of the container is sufficiently strong, particularly in view of the great diameter involved of, for instance, 20 meters, in combination with the high inner pressure of, for instance 50 atmospheres above atmospheric pressure—with smaller diameters even pressure up to 150 atmospheres above atmospheric pressure may be involved. In addition thereto, a complete shielding against radioactive rays must be assured and any harmful influence of the temperatures in the container, especially upon the steel wires of the pre-stressed concrete, must be avoided. To take in consideration the above mentioned circumstances would, with heretofore customary designs of pressure containers of pre-stressed concrete, require considerably thick walls and would result in an uneconomical construction. While avoiding such uneconomical construction and realizing the above objects, the container according to the present invention is characterized in that the container wall is composed of at least an outer shell of pre-stressed concrete, of an inner shell by means of which harmful effects of the container contents—except the pressure effect—are kept away from the outer shell, and as the case may be from the surroundings outside said outer shell, and of a filling of liquid of low compressibility interposed between said two shells, means being provided which are adapted to convey the pressure in the interior of the container onto said filling without subjecting the inner shell to stresses.

Expediently, a cooling system is provided within said filling. The means for conveying the pressure from the interior of the container onto said filling, preferably consists of at least a passage in the inner shell and a diaphragm adapted to close said passage. The inner shell is formed, for instance, by a cover of temperature nonsensitive protective material such as concrete of high heat resistance, and by a cover of heat insulating material for instance ceramic or tuff surrounding said first mentioned cover.

Referring now to the drawing in detail, the pressure

2

container illustrated in FIG. 1 has an outer cylindrical shell **1** of pre-stressed concrete. Provided in said outer shell **1** are steel wires **2** which impart upon the concrete the required pre-stress in tangential direction. The inner chamber of the container is confined by a cylindrical wall **3** of concrete of high heat resistance. This concrete, which, as the case may be, is particularly heavy and rich in hydrogen, serves for shielding against radioactive rays. Wall **3** has its outside surrounded by a wall **4** of heat insulating material as, for instance, ceramic or tuff. Each, the inner wall **3** and the outside of wall **4** is covered by a skin **5** and **6** respectively of steel sheet metal. These metal sheets serve as gas and liquid seal. Moreover, they may also serve as mold when preparing wall **3**, **4**.

Between outer shell **1** of pre-stressed concrete and the inner shell formed by walls **3** and **4**, there is provided a cylindrical chamber **7** which is completely filled with water and contains cooling pipes **8** leading at the upper end of chamber **7** toward the outside for connection with a cooling system.

The inner chamber C of the container communicates with the intermediate chamber **7** between the two shells by at least one passage **9** which has two bends and extends through wall **3** and also through wall **4**. The mouth of passage **9** in chamber **7** is closed by a diaphragm **10**, which transmits the pressure from the inner chamber C to the intermediate chamber **7**. Furthermore the diaphragm **10** prevents any exchange of media between the inner chamber C and the intermediate chamber **7**. The passage **9** in cooperation with the diaphragm **10** causes the existence of equal pressures in the inner chamber C and the intermediate chamber **7**. The top and bottom of said container are closed by inwardly arched spherical segments **11** and **12** respectively of concrete. These segments are provided with linings **13** and **14** respectively of heat insulating material as for instance ceramic. Lining **14** is designed as load distributing pressure layer. A conduit **15** extends through an opening of the container and is adapted to be connected to means for gas feeding. Outer shell **1** is in axial direction thereof pre-stressed by vertically extending steel wires **16**. Near the ends of shell **1**, the concrete is provided with passages **17** for cooling air.

The pressure prevailing in the container is conveyed to the water in chamber **7** by channel **9** or, as the case may be, by a plurality of such channels in the interior wall **3** and the heat insulating wall **4** in cooperation with a diaphragm or diaphragms **10**. Since, therefore, a pressure equalization is effected between the inner and outer sides of the inner shell formed by walls **3** and **4**, this shell will not be subjected to the pressure of operation of the reactor. This pressure is rather absorbed solely by the outer pre-stressed concrete shell **1** inasmuch as it is this shell **1** onto which said pressure is conveyed by the water filling in chamber **7**. Consequently, by means of steel wires **2**, such a pre-stress of the concrete in shell **1** is produced that at the maximum pressure of operation occurring in the reactor, a sufficient compressive stress remains in the concrete.

Inasmuch as the pre-stressing wires **2** and **16** are located exclusively in the outer concrete shell **1**, they are not exposed to any undesired temperature influences. This is aided on one hand by the heat insulating wall **4** which limits the temperature drop in wall **3**, for instance to 50° C., and on the other hand, the heat transferred to the water filling is conducted away by means of cooling pipes **8**.

Chamber **7** between the outer and inner shells may, instead of being filled with water, also be filled with another liquid as for instance oil. Water is particularly ad-

vantageous inasmuch as it represents a good heat conductor and, moreover, acts as brake for neutrons.

The ball-shaped container according to FIG. 2 is principally built up in the same way as the cylindrical container of FIG. 1. The outer shell **18** is formed by a hollow ball of pre-stressed concrete. The lower portion of said hollow ball merges with a base **19**, whereas the upper portion merges with a connecting piece **20** for a filling device for the reactor. The concrete of this shell contains a network of steel wires **21** crossing each other for obtaining a pre-stress. The tensioning heads **22** of said wires **21** are accessible from the outside. The inner shell is formed by a hollow ball **23** of concrete of high heat resistance and of a ball-shaped wall **24** surrounding said hollow ball **23** and made of insulating material as, for instance ceramic or tuff. The inner side of hollow ball **23** and the outside of wall **24** are each provided with a skin **25**, **26** respectively of steel sheet metal. Inner shell **23**, **24** rests upon outer shell **18** by means of bearings **27** of corrosion-resistant steel. For purpose of stabilizing the inner spherical shell, a concrete stud **28** is provided which extends from the outer shell **18** with slight play into a recess **29** of the inner shell. Again a conduit **15** extends through an opening of the container and is adapted to be connected to means for the gas feeding.

With the ball-shaped container according to FIG. 2, the inner shell **23**, **24** is in the same manner as the container of FIG. 1 relieved from pressure by the fact that a pressure equalization is effected between the interior of the container and an intermediate chamber **30** provided between the outer and inner shells and filled with water. This may be effected by a pressure control system which from the outside acts upon the filling of chamber **30**. By pipes **31** and **32** respectively the interior of the container and the intermediate chamber **30** are connected with a difference pressure control gauge **33**. Any difference in pressure in the interior of the container and the chamber **30** is transmitted to a command unit **34**. The command unit **34** pilots the pump **35** in such a way that the pressures are kept in equilibrium. The pump **35** is connected with the storage unit **36**. Chamber **30** also has provided therein cooling means **33**. Also in this instance, the steel wires **21** for imposing a pre-stress upon the outer shell **18** are guarded against harmful temperature influences.

It is, of course, to be understood that the present invention is, by no means, limited to the particular constructions shown in the drawings but also comprises any modifications within the scope of the appended claims. Thus, while the present invention has been described in connection with containers for core reactors, it is expressly to be understood that the present invention also applies to reaction vessels of apparatuses in the chemical industry which have a high inner pressure and require a lining resistant against chemical influences.

What we claim is:

1. A high pressure container, which includes: an outer shell of prestressed concrete, an inner heat insulating shell arranged in radially spaced relationship to and within said outer shell so as to define therewith a chamber closed in itself, said chamber being filled with a liquid, cooling means extending into said liquid filled chamber for cooling the liquid therein, the inside wall of said inner shell

defining a main chamber, and means communicating with both said inner chamber and said liquid filled chamber for equalizing the pressure in both of said chambers, whereby said inner shell does not have to absorb the pressure prevailing in said main chamber and said inner shell need not be of prestressed concrete.

2. A high pressure container according to claim **1**, in which the means for equalizing the pressure in both of said chambers includes conduit means leading from said main chamber through said inner shell to said liquid filled chamber and also includes diaphragm means extending over the mouth of said conduit means in said liquid filled chamber.

3. A high pressure container according to claim **1**, in which said inner shell comprises a first part of high heat resistant material and also comprises a second part surrounding said first part and consisting of heat insulating material.

4. A high pressure container according to claim **1**, in which said inner and outer shells are of a cylindrical contour and are closed at their ends by inwardly arched end walls with an inner lining of heat insulating material.

5. A high pressure container according to claim **1**, in which said container has a ball-shaped contour with the inner and outer shells thereof interlocked.

6. A high pressure container according to claim **2**, in which said conduit means leading from said main chamber to said liquid filled chamber is formed by stepped conduit means.

7. A high pressure container according to claim **2**, in which said inner heat insulating shell includes: a concrete central wall portion, an outer heat insulating wall portion engaging said central wall portion, and an inner wall portion of sheet metal in engagement with said central wall portion so that said central wall portion is interposed between and in engagement with said outer heat insulating wall portion and said inner wall portion.

8. A high pressure container according to claim **7**, in which said outer heat insulating wall portion is of ceramic material.

9. A high pressure container according to claim **7**, in which said outer heat insulating wall portion is of tuff.

References Cited

UNITED STATES PATENTS

1,911,608	5/1933	Davis et al.	165—135 X
3,175,958	3/1965	Bougade	165—136 X
3,260,020	7/1966	Patin	220—13 X
3,301,320	1/1967	Huntington	165—136 X
2,777,295	1/1957	Bliss et al.	62—48
2,995,505	8/1961	Guild.	

FOREIGN PATENTS

228,433	10/1959	Australia.
800,388	8/1958	Great Britain.
859,072	1/1961	Great Britain.
861,513	2/1961	Great Britain.
936,198	9/1963	Great Britain.

ROBERT A. O'LEARY, *Primary Examiner.*

ALBERT W. DAVIS, JR., *Assistant Examiner.*

U.S. Cl. X.R.

62—45; 165—136; 176—52, 87; 220—9, 13