July 4, 1967 J. E. MEAGHER 3,329,810

WATERPROOF ELECTRICAL LANTERN

Filed March 12, 1965 2 Sheets-Sheet 1

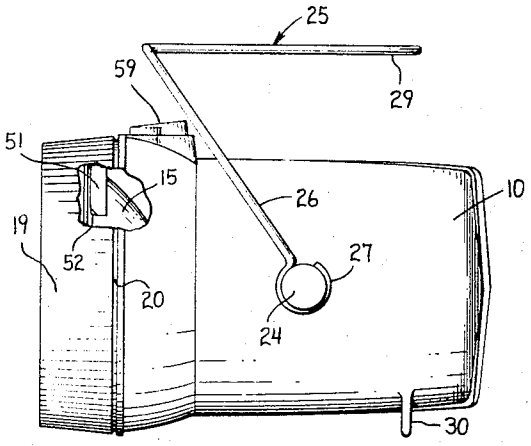

Fig. 1.

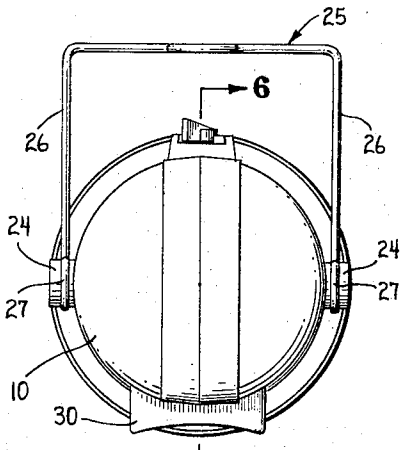

Fig. 2.

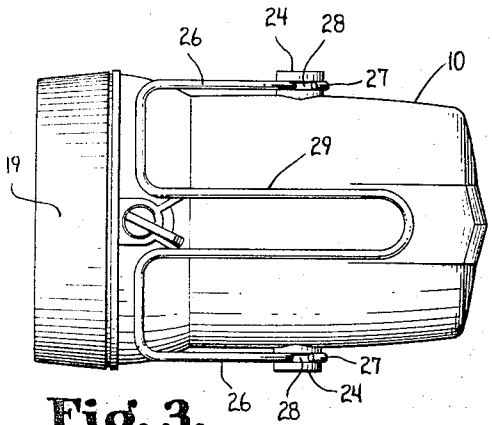

Fig. 3.

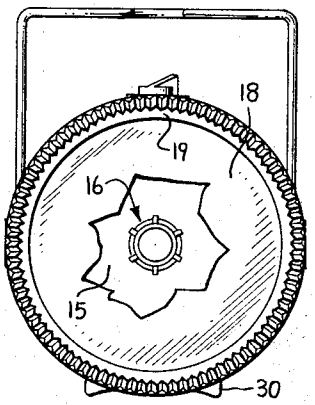

Fig. 4.

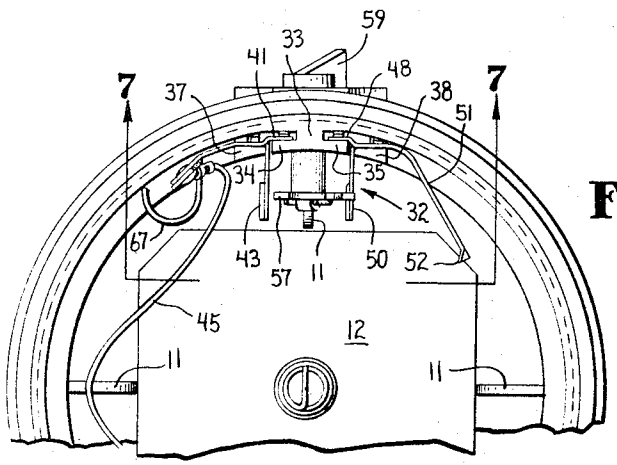

Fig. 5.

INVENTOR.
JAMES E. MEAGHER

BY Lockwood, Woodard, Smith & Weikart
Attorneys

July 4, 1967 J. E. MEAGHER 3,329,810

WATERPROOF ELECTRICAL LANTERN

Filed March 12, 1965 2 Sheets-Sheet 2

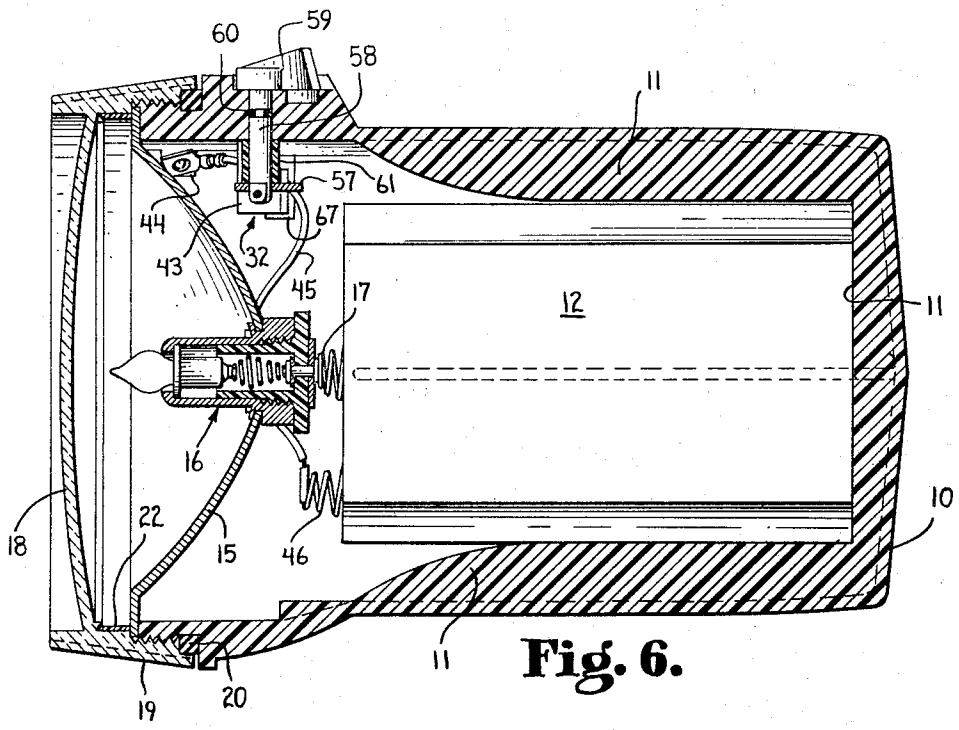

Fig. 6.

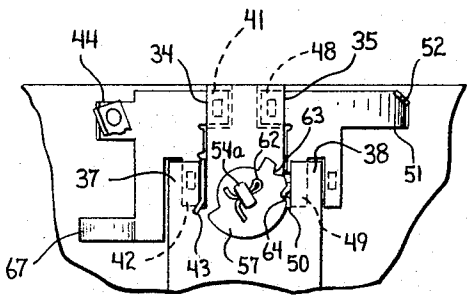

Fig. 7.

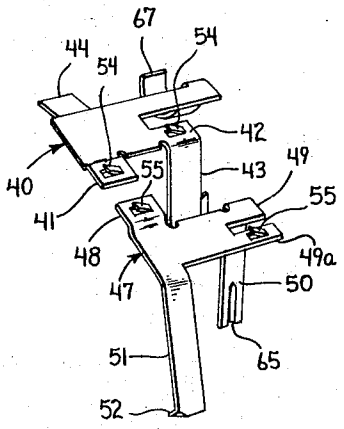

Fig. 8.

INVENTOR.
JAMES E. MEAGHER

BY Lockwood, Woodard, Smith & Weikart
Attorneys

United States Patent Office 3,329,810 Patented July 4, 1967

3,329,810

WATERPROOF ELECTRICAL LANTERN

James E. Meagher, Marion, Ind., assignor to Noro Industrial Corporation, New York, N.Y., a corporation of New York

Filed Mar. 12, 1965, Ser. No. 439,172
12 Claims. (Cl. 240—10.63)

This invention relates generally to an electrical lantern, and more particularly, to a multipurpose electrical lantern adapted for use by sportsmen, motorists and industrial, commercial or residential users.

Conventional electrical lanterns usually comprise a metallic casing for accommodating one or more batteries, a bulb, reflector, and lens assembly screwed into one end of the casing, and a switch structure mounted to an outer surface of the case. In such lanterns no provision is made for making the lantern waterproof, and the ratio of volume to weight is such that they will not float when immersed in water. Thus, electrical lanterns constructed according to conventional practice cannot be used to advantage in connection with aquatic activities as well as in connection with the many different types of uses connected with highway, industrial and domestic activities.

The principal object of this invention is to provide an electrical lantern having a simple and economical structure and one which adapts the lantern for universal use.

Another object of this invention is to provide an electrical lantern which is waterproof and which will float when immersed in water.

Still another object of this invention is to provide an electrical lantern having a casing, lens and switch structure which is simple and economical and which renders the lantern waterproof and non-sinkable.

A further object of this invention is to provide an electrical lantern having a simple combined stand and handle which is so constructed and attached that the lantern can be aimed in any desired direction.

In accordance with this invention there is provided an electrical lantern comprising a casing for supporting a battery, a lamp socket and reflector assembly seated on the open end of the casing, a window closing the open end of the casing and sealed with respect thereto, and a switch mechanism mounted on the casing and having an exposed operating knob, the switch being waterproof, and the lantern structure being such that the lantern is non-sinkable.

The full nature of the invention will be understood from the accompanying drawings and the following description and claims.

FIG. 1 is a side elevation of the lantern provided in accordance with this invention.

FIG. 2 is a rear elevation.

FIG. 3 is a top plan view.

FIG. 4 is a front elevation.

FIG. 5 is a partial front elevation with the lens reflector and socket assembly removed.

FIG. 6 is a longitudinal cross section taken on line 6—6 of FIG. 2 to an enlarged scale.

FIG. 7 is a fragmentary view of the switch mechanism taken on line 7—7 of FIG. 5.

FIG. 8 is a perspective view of the switch contacts illustrated in FIGS. 5 and 7.

Referring to the drawings, the electrical lantern, as provided in accordance with this invention, comprises a casing **10** formed of a relatively lightweight plastic material. On the interior of the casing there is provided a plurality of inwardly projecting rib members **11** which extend along the side and bottom of the casing for supporting a conventional battery **12**. As will be readily apparent from the drawings, the lefthand end (FIG. 6) of

the casing is open so that the battery may be inserted and so that a reflector **15** may be seated on the end of the casing. The reflector supports a conventional lamp socket and lamp assembly **16** which provides electrical connection between one terminal of the lamp and terminal **17** of the battery. The other terminal of the lamp is connected, in conventional fashion, with the reflector **15** which is electrically conductive. The open end of the casing is closed by a transparent lens **18** having a transparent collar **19** integrally formed therewith and including a threaded portion which screws on to a thread formed on the end of the casing as illustrated in FIG. 6. For sealing the lens with respect to the casing there is provided a sealing gasket **20** which prevents flow of water into the casing.

As an added feature of this invention, there is provided within the lens collar **19** an annular band **22** which may be formed of a red light-transmitting plastic material which creates a visible band of red light whereby the lamp may serve as a safety lamp for motorists or others.

The casing also includes a pair of external and diametrically opposed knobs **24** to which may be attached a combined handle and stand **25**. The leg portions **26** of the stand are bent to form eyes **27** which are mounted in grooves **28** formed in the knobs **24**. The eyes **27** are so dimensioned that they clamp onto the knobs **24** with sufficient friction so that the stand will support the lamp casing at any desired angle with respect to the legs **26** while still being movable to any desired angular relationship with the casing. The handle or foot portion **29** is disposed at such an angle with respect to the legs **26** that the casing may be supported without tipping when the stand is used for supporting the lantern on a fixed object.

An important feature of this invention is that the ratio of the weight of the entire lantern to its volume or displacement is such that the lantern will float when immersed in water. Thus, the lantern may be used by fishermen, boatmen, or divers, either above or below the water surface, without risk of the lantern sinking and being lost.

A further feature of this invention includes the embossment **30** which projects outwardly of the casing as illustrated in FIGS. 1, 2 and 4 and serves to support the lantern in the position illustrated in FIGS. 1, 2 and 4 when it is desired to place the lantern in such a position. As will be obvious, the lantern may be rested on the stand **25** by simply reversing the lantern's position from that shown in FIG. 1.

For switching the lantern on and off there is provided a switch mechanism **32**. The casing **10** may be formed to provide an integral block which consists of a web member **33** projecting radially inwardly of the casing and a pair of wing portions **34** and **35** spaced inwardly of the inner surface of the casing. The block also includes a pair of upwardly projecting ears **37** and **38** which are spaced inwardly of the casing. The switch contacts are illustrated in FIGS. 5, 7 and 8. The first switch contact **40** includes an ear **41** which mounts behind the wing **34**. A second ear **42** of switch contact **40** mounts behind the upwardly projecting ear **37** of the block. Ear **42** includes a contact spring **43** which projects inwardly with respect to the casing. The contact member **40** also includes a terminal portion **44** to which may be connected a wire **45** which is also connected to the terminal **46** of the battery. The switch also includes another contact member **47** having an ear **48** which mounts behind the wing member **35**, a second ear portion **49** which mounts behind the upwardly projecting ear **38** and includes a contact spring **50** which extends inwardly of the casing in parallel with the contact **43**. Contact member **47** also includes an extension **51** having a sharp pointed end **52** which extends into engagement with the inner surface of the reflector **15**, thereby to establish electrical connection therewith. The struck-

out members 54 and 55 of contact members 40 and 47, respectively, serve to provide pressure engagement of the ears 41, 42, 48 and 49*a* with the interior surface of the casing so that the switch contacts are firmly secured with respect thereto.

For establishing contact between the contact springs 43 and 50 there is provided a conductive plate 57 mounted to the end of a non-conductive shaft 58 which extends through the casing and terminates in an operating knob 59. Shaft 58 is grooved to receive a sealing ring 60 which prevents flow of water into the casing. As will be obvious from FIG. 7, rotation of the knob 59 and plate 57 will move the periphery of the plate into engagement with spring contact 43, thereby to establish connection of the lamp to the battery. Plate 57 is mounted to shaft 58 on the rectangular end 58*a* thereof between a spacer 61 and a cotter pin 62. Plate 57 is notched at 63 and 64 to receive the V-shaped portion 65 of contact spring 50 so that the plate may be indexed between the "off" position shown in FIG. 7 and an "on" position where spring 50 rests in notch 63. Plate 57, being conductive, establishes electrical connection between spring contacts 43 and 50.

For equipping the lantern with a spare bulb, the switch contact 40 is provided with a spring clip portion 67 which is curved to receive and support a spare lamb bulb (not shown).

From the foregoing description it will be apparent that this invention provides a multi-purpose electrical lantern having a simple and inexpensive molded plastic casing and lens structure. The seals between the lens and the casing and between the switch shaft and the casing function to prevent water leakage into the interior of the casing, and because of the materials used and the displacement weight relationship, the lantern will float in water and, thus, is particularly adapted for use in aquatic activities.

The simple and inexpensive switch structure is also noteworthy. The support for the switch contacts, consisting of the block 33, 34, 35, is molded as a part of the casing, and the switch contacts 40 and 47, having the struck-out portions 54 and 55, are permanently attachable to the casing by forcing them behind the wing members of the block. No riveting operations or other fastening means is required.

The lantern is also provided with the colored band 22 which adapts the lantern for use as a warning light so that it may be used by motorists, for example, for warning oncoming traffic of a parked vehicle, for example. The combined handle and stand 25, together with the knob structure 24, provides a means, not only for carrying the lantern, but also for setting it on a fixed object at any desired angle so that the light beam may be directed in any desired direction for illuminating a work area or a distant object.

A further feature of the invention is the pointed end 52 of contact member 47 which bears on the surface of reflector 15. When the reflector and lens are mounted to the lantern casing and the lens is screwed on to the casing, the reflector tends to rotate in engagement with the point 52 so that the point 52 penetrates any non-conductive coating which may have formed on the surface of the reflector, thereby to establish good electrical contact with the reflector.

The invention claimed is:

1. An electrical lantern comprising a non-conductive casing, a battery disposed within said casing having a pair of terminals at one end thereof, a conductive reflector seated on one end of said casing and a lamp bulb mounted thereon with one of its terminals electrically connected thereto and its other terminal engaging one of said battery terminals, said casing including a non-conductive block disposed on its inner surface adjacent said reflector, an on-off switch including a first contact mounted on said block and connected to the other of said battery terminals and a second contact mounted on said block in non-conductive relation to said first contact and including an extension in contact with said reflector, and a connector rotatably mounted in said casing between said contacts for movement into and out of conductive engagement with said contacts.

2. An electrical lantern according to claim 1 wherein said extension of said second contact includes an end portion having a sharp point in engagement with said reflector.

3. An electrical lantern according to claim 1 wherein said switch comprises a non-conductive shaft extending through said casing to the exterior thereof, an operating knob on the outer end of said shaft, and a conductive connector mounted on the inner end of said shaft between said contacts.

4. An electrical lantern according to claim 1 wherein said block comprises a web extending inwarding from said casing and wing members extending laterally to each side of said web in spaced relation to said casing to form a pair of slots between the wing members and the casing, and each of said contacts includes a base portion mounted in one of said slots and a leaf extending into operative relation with said connector.

5. An electrical lantern according to claim 4 wherein said leaves extend inwardly from said block in parallel spaced relation, and said connector comprises, a non-conductive shaft rotatably mounted in said casing between said leaves with one end extending exteriorly of said casing and the other end extending between said leaves, and a conductive plate mounted on said other end and having a form such that rotation of said shaft in one direction moves said plate out of engagement with one of said leaves and opposite rotation of said shaft moves said plate into conductive relation with said leaves.

6. An electrical lantern according to claim 5 wherein said plate comprises an eccentric cam having one portion in continual engagement with one of said leaves and another portion movable into or out of engagement with the other of said leaves.

7. The structure of claim 1 further characterized in that said casing is generally cup-shaped and has a plurality of inwardly projecting rib members extending from its side and bottom surfaces with said rib members formed to provide a battery supporting chamber.

8. The structure of claim 1 further characterized by and including handle and stand means attached to said casing by a pair of eye portions which frictionally engage a pair of pivot knobs formed in said casing thereby enabling positioning of said casing at different selected angles relative to said stand means.

9. The structure of claim 1 further characterized in that said casing has an open threaded end and an external flange spaced from said open end and adjacent to said threaded portion, a sealing ring seated on said flange, and a window closing said open end and including a threaded collar engaging said casing threaded portion and extending into sealing engagement with said sealing ring.

10. The structure of claim 3 further characterized by and including a sealing ring in sealing engagement between said shaft and said casing.

11. An electrical lantern of the type having a casing and lens enclosing an electrical power source, a conductive reflector, and a lamp bulb electrically connected to said power source through manual on-off switch means, said switch means comprising: a first contact mounted on a non-conductive block disposed on the inner surface of said casing, means connecting said first contact with said power source, a second contact mounted on said block in non-conductive relation to said first contact, said second contact including an extension in conductive engagement with said reflector, and a connector rotatably mounted in said casing between said contacts for movement into and out of conductive engagement with said contacts.

12. An electric lantern comprising a non-conductive cup-shaped casing having an open end, a plurality of in-

wardly projecting rib members extending from side and bottom portions of said casing, said rib members formed to provide a battery supporting chamber, said casing including a threaded portion at said open end and an external flange spaced from said open end and adjacent to said threaded portion, a conductive reflector formed with lamp socket means and seated on the open end of said casing, a sealing ring seated on said flange, a window closing said open end and including a threaded collar engaging said threaded portion and extending into sealing engagement with said sealing ring, and manually operable on-off switch means comprising first and second contacts mounted in non-conductive relation on a block extending from the inner surface of said casing, said second contact being conductively connected to said reflector, a rotatable shaft extending through said casing between said contacts

for movement of a plate mounted at one end thereof into and out of conductive engagement with said contacts, and a sealing ring in sealing engagement between said shaft and said casing whereby said lantern is rendered waterproof.

References Cited

UNITED STATES PATENTS

2,253,952	8/1941	Desimone	240—10.6
2,753,443	7/1956	Grohsgal	240—10.63
3,162,376	12/1964	Furuya	240—26 XR
3,175,080	3/1965	Moore	240—10.65

FOREIGN PATENTS

966,578	8/1964	Great Britain.

NORTON ANSHER, *Primary Examiner.*