Sept. 15, 1931. M. R. WOLFARD 1,823,018

CARBURETOR

Original Filed July 17, 1928

Fig. 1.

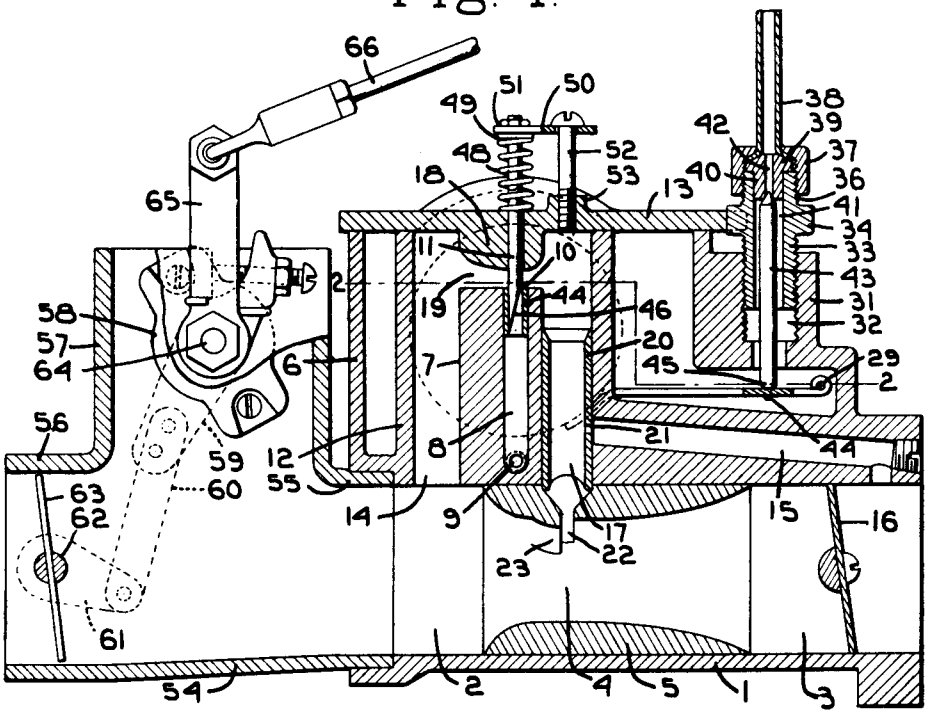

Fig. 2.

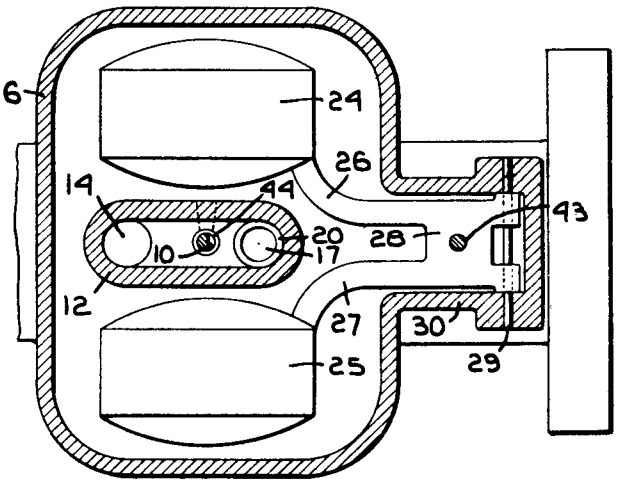

Fig. 3.

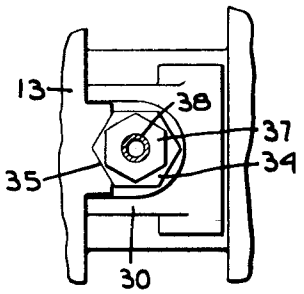

Inventor.
Merl R. Wolfard
by Heard Smith & Tennant.
Attys.

Patented Sept. 15, 1931

1,823,018

UNITED STATES PATENT OFFICE

MERL R. WOLFARD, OF CAMBRIDGE, MASSACHUSETTS, ASSIGNOR TO CHARLES F. HOPEWELL AND HELEN C. HOPEWELL, A COPARTNERSHIP DOING BUSINESS AS HOPEWELL BROTHERS, OF WATERTOWN, MASSACHUSETTS

CARBURETOR

Original application filed July 17, 1928, Serial No. 293,371. Divided and this application filed July 17, 1928. Serial No. 293,372.

This invention relates to improvements in carburetors and the object thereof is to provide a simple design of mixture-proportioning parts, and regulating means therefor, operable to produce a substantially proportional change in the fuel-air ratio during idle and light load operation, as well as under heavy load operation.

The present application is a division of my co-pending application, Serial Number 293,371 filed July 17, 1928, for improvements in carburetors, in which the preferred embodiment of the invention relates to unit-controlling means for producing a substantially proportional change on the fuel-air ratio from idle to full load and having controlling means operable by changes in temperatures and also preferably by changes in barometric pressure. In the construction illustrated in the co-pending application a low flowing head is maintained at the fuel inlet during idle and light load operation of the engine to supplement the rate of flow induced by the suction head at the metering section in combination with means producing an uninterrupted flow of mixture from the metering section to the engine.

In the present case different specific means are provided for maintaining a continuous flow at a low rate through the fuel inlet irrespective of the suction head in the metering section during idle and light load operation.

An object of the invention, therefore, is to provide means for producing a proper proportioning of the fuel-air mixture in combination with means for maintaining an uninterrupted mixture flow during all normal conditions of operation of the engine from idle to full load.

More particularly the object of the invention is to provide a carburetor construction for internal combustion engines comprising a mixing passage having a metering section, an inlet section, an outlet section subject to the suction of the engine, a throttle valve in the outlet section, a suction passage communicating with said inlet section, a fuel inlet communicating with said suction passage, and in which the suction passage leads downwardly from the fuel inlet to the metering section, and has a branch intermediate of the fuel inlet and the metering section communicating with the outlet section beyond the throttle, providing a combination which is adapted to maintain a continuous and uninterrupted flow of properly proportioned fuel to air mixture to the engine under all normal conditions of operation from idle to full load.

A further object of the invention is to provide a construction of this character comprising a fuel reservoir communicating with the fuel inlet, with means for maintaining with precision a constant fuel level slightly below the fuel inlet.

A further object of the invention is to provide a device of this character with a valve for controlling the fuel inlet having a wall complementary to a portion of the wall of the fuel inlet and chamfered on the opposite side, thus providing a construction which will accurately regulate the flow of fuel to the suction passage.

A further object of the invention is to provide means for maintaining the height of fuel in the reservoir slightly below the level of the fuel inlet comprising a valve for regulating the supply of fuel to the reservoir controlled by float sections symmetrically positioned with relation to the fuel inlet, with lever mechanism intermediate of the float sections and regulating valve operable to transmit a substantially constant multiplied force to the regulating valve regardless of the inclination of the reservoir.

A further object of the invention is to provide novel means for adjusting the height of the seat for the regulating valve.

A further object of the invention is to provide a carburetor construction of the character specified, with means operable to regulate the degree of depression below atmospheric pressure at the fuel inlet.

A further object of the invention is to provide a simple controlling means with thermostatically operable means automatically to regulate the degree of depression below atmospheric pressure in the inlet section of the mixing passage.

A further object of the invention is to provide a carburetor of the character specified,

with means for admitting hot and cold air, and comprising thermostatically operable means subject to the temperature of the hot air admitted to the inlet section, and means operable thereby gradually to diminish the amount of hot air admitted to the inlet section and simultaneously gradually to increase the amount of cold air admitted thereto.

A further object of the invention is to provide a carburetor of the character specified with means for admitting the fuel-air mixture to the metering section of the mixing passage comprising a transverse slot having a width less than the normal diameter of the suction passage and greater in length than said normal diameter of said suction passage.

Another object of the invention is to provide a shield in front of and in proximity to said slot operable to increase the suction head in the suction passage relative to the suction head in said metering section as the load increases beyond half load.

These and other objects and features of the invention will more fully appear from the following description and the accompanying drawings and will be particularly pointed out in the claims.

In the drawings:

Fig. 1 is a view, mainly in vertical section, of a carburetor containing a preferred embodiment of the invention;

Fig. 2 is a horizontal sectional view of a portion of the construction illustrated in Fig. 1 on line 2—2 Fig. 1; and,

Fig. 3 is a detail plan view of the means for locking the fuel valve cage in adjusted position.

The preferred embodiment of the invention as illustrated in the accompanying drawings comprises a casing 1 having an inlet section 2 and an outlet section 3, with an air metering section therebetween of predetermined fixed area. As illustrated, an air metering section of reduced fixed area is formed by providing a filler 5 having a Venturi passage therethrough. A reservoir which is mounted upon, or desirably formed integrally with the casing, comprises a wall 6 preferably surrounding a fuel inlet and preferably has a centrally upwardly-extending boss 7 having a vertical conduit 8 which communicates with the reservoir through a small orifice 9 having a chamfered wall. The central portion of the boss extends upwardly a short distance above the fuel level which is maintained in the reservoir, and the upper end of the conduit 8 desirably is provided with a sleeve forming a fuel inlet 10, the area of which is controlled by a valve 11 which is slidably mounted in said fuel inlet. The peripheral wall 12 of the boss desirably is of oblong form, as illustrated in cross-section in Fig. 2, and extends upwardly into engagement with the under face of the cover 13 of the reservoir.

A suction passage 14 extends upwardly from the inlet section, thence horizontally across the fuel inlet and thence downwardly immediately and unobstructedly, and is so branched that one branch 15 communicates with the outlet passage below the fuel inlet and beyond the throttle 16, while another branch 17 continues unobstructedly downwardly and communicates with the mixing passage at the air metering section 4 thereof. The cover 13 is provided with a downwardly-extending boss 18 which is located immediately above the boss 7 and in cooperation therewith provides a restricted passage 19 forming a metering section in the suction passage at the fuel inlet 10. Desirably a sleeve 20 is placed in the portion of the suction passage beyond the metering section and is provided with a restricted opening 21 communicating with the branch 15 of the suction passage which leads to the outlet section beyond the throttle 16. The lower end of the sleeve 20 desirably extends through the wall of the casing 1 and seats in a recess in the filler 5, thereby holding the filler in place. The filler 5 desirably is provided with a transverse slot 22 which extends through a considerable area of the upper wall of the filler 5 and is of a width less than the normal diameter of the suction passage and of a length greater than said diameter. The filler 5 desirably is provided with a segmental boss 23 in front of the slot 22 and forms a shield at the end of the suction passage which communicates with the metering section.

It has been shown experimentally that a shield thus placed in front of and in proximity to said slot increases the suction head in the suction passage relatively to the suction head in the air metering section under certain operating conditions, thereby increasing the efficiency and/or the smoothness of operation of the engine.

The relative increase in fuel delivered to the metering section during heavy loads as compared with the amount delivered during light loads may be increased by using series orifices in the fuel inlet conduit. This is particularly true if orifices are used which have a chamfered inlet, because it is a well demonstrated fact that the discharge coefficient of such orifices increases gradually and very substantially as the suction head increases.

In the embodiment of the invention illustrated herein this is accomplished by providing the small orifice 9 at the bottom of the conduit 8 with a chamfered inlet and the fuel inlet 10 with a chamfered valve.

Means are provided for maintaining the liquid level of the fuel in the fuel reservoir slightly below the fuel inlet 10. To accomplish this purpose float sections 24 and 25 are symmetrically disposed relatively to the fuel inlet 10 and are connected, respectively, to arms 26 and 27 of a yoke 28 which is

pivotally mounted upon a pin 29 in a hollow extension 30 of the wall 6 of the fuel reservoir.

The extension 30 is provided with an upwardly-extending boss 31 which is bored vertically to provide a fuel passage 32 leading to the reservoir. The upper portion of the wall of the bore is screw threaded to receive complementary screw threads of a valve cage 33 which desirably has an angular or hexagonal enlargement 34 at a distance from its upper end. In the preferred construction illustrated the cover 13 is provided with a V-shaped notch 35 adapted to fit adjacent faces of the hexagonal enlargement 34 of the valve cage, thereby providing means for locking the valve cage from rotation when it has been adjusted at a predetermined height. The upper end portion of the valve cage is provided with external screw threads 36 to receive a coupling 37 for the end of a supply pipe 38. A valve seat member 39 is interposed between the coupling 37 and the upper end of the valve cage 33 and comprises a head which rests upon the upper end of the valve cage and a downwardly-extending cylindrical portion 40 which desirably is pressed into the upper end of the vertical cylindrical passage 41 of the valve cage. The valve member has a vertical central bore 42, the lower end of the wall of which is tapered to form a conical seat complementary to the conical upper end of a regulating valve 43 which extends axially of the passage 41 of the valve cage and of the bore 42. The lower end of the valve is provided with a reduced extension 44 which passes through a suitable aperture in the yoke 28 in proximity to the pivot 29 of said yoke. The shoulder 45 at the base of the reduced extension 44 desirably is slightly rounded. The pivot of the yoke 28 is slightly above the point of engagement of the lower end of the valve when the regulating valve is normally closed.

As heretofore stated, by reason of this construction no sliding contacts are presented which will interfere with the free movement of the valve. Furthermore, the vertical swinging movement of the yoke 28, even though slight, transmits a sufficient lateral movement to the lower end of the valve 43 which will prevent the sticking of the valve upon its seat. The distance between the fulcrum of the yoke and the point of engagement therewith by the valve 43 must be so short relatively to the distance from the point of engagement to the vertical plane of the horizontal axis of the float sections 24 and 25, that a sufficiently large and substantially constant multiplied leverage is interposed between the float sections and the regulating valve which will maintain the liquid level in the reservoir with only small variations in height slightly below the fuel inlet during idle and light load operation of the engine. This multiplied leverage necessitates a substantial drop in the position of the float sections, (about $\frac{3}{8}''$) when the engine is operating at full load, in order to permit a sufficient amount of fuel to flow into the reservoir. By reason of the adjustability of the valve cage 33 within the boss 31 the vertical position of the valve seat may be varied to establish a liquid level in the reservoir accurately at a predetermined height slightly below the fuel inlet 10. In this construction the valve cage will be locked in adjusted position when the cover 13 of the reservoir is placed in position upon the top of the reservoir and secured thereupon by suitable screws.

The effective area of the fuel outlet is regulated by the valve 11 which desirably is of cylindrical form slidably mounted in a bearing in the boss 18 and extending across the metering section 19 of the suction passage into the fuel inlet 10.

The lower end of the valve is chamfered, preferably on the down-stream side, to present a flat face 46 extending at an acute angle to the axis of the valve. Preferably but not necessarily, the sleeve 47 is forced into the upper end of the inlet conduit 8 and the inner wall of the sleeve is complementary to a portion, preferably the cylindrical upstream wall, of the valve 11. The effective area of the fuel outlet may be varied as required by vertical adjustment of the valve.

Any suitable means may be provided for adjusting the valve 11. In the construction illustrated adjusting means are provided which also act to maintain a portion of the wall of the valve 11 continuously in engagement with the complementary wall of the sleeve 47 forming the fuel inlet.

In the construction illustrated, a spiral spring 48, which is seated upon the cover surrounds the valve 11 and abuts at its upper end against a shoulder on the under side of an enlarged section 49 of the valve. A plate 50 is clamped upon the upper face of the enlarged portion of the valve by a nut 51. The plate 50 is engaged by the head of an adjusting screw 52 which is located in proximity to the valve 11 and in parallelism therewith and engages a screw-threaded aperture in the boss 53 upon the cover. By reason of this construction a leverage is exerted by the spring 48 against the head of the adjusting screw 52, which maintains the cylindrical portion of the valve in constant engagement with the complementary wall of the inlet.

In the normal operation of the invention as above described, during the idle operation of the engine, with the throttle valve 16 in approximately closed position, as illustrated in Fig. 1, the suction of the engine produces a partial vacuum in the branch

15 of the suction passage, thereby causing air to flow through the metering section 19 of the suction passage, thus inducing a flow of fuel through the inlet 10 which mixes with the air in the suction passage and passes through the restricted aperture 21 and branch 15 to the engine. During such idle operation air is also caused to flow upwardly through the slot 22 in the filler 5 into the lower end of the branch 17 of the suction passage and out through the restricted aperture 21 to mingle with the fuel-air mixture drawn through the suction passage.

The area of the restricted passage 21 in the sleeve 20 is so proportioned, relatively to the area of the lower end of the branch 17 leading to the air metering section 4 in the mixing passage and to the area of the metering section 19 of the suction passage, that the suction produced in the metering section 19 will maintain a flow of fuel from the fuel inlet at a low flowing head sufficient to produce satisfactory operation on idle.

It is well known that when air is drawn through an orifice of restricted area, such as the aperture 21, a maximum flow through that orifice will be induced when the pressure in the passage 15 is reduced to approximately fifty-three per cent of the absolute pressure existing at the entrance to the orifice. However, when fuel is entrained in the air drawn through such orifice, this limiting flow will be reached at a somewhat lower absolute pressure in the passage 15, but in any case the flow through the orifice 21 will be constant during a considerable period of operation as the throttle valve is gradually opened from idle. By reason of this fact a low flowing head is continuously maintained at the fuel inlet irrespective of the suction head in the air metering section 4 of the mixing passage during idle and light load operation up to about half load.

The flow of air through the slot 22 from the metering section of the mixing passage toward the aperture 21 will be gradually reduced as the throttle valve is opened, and a positive downward flow of fuel-air mixture will be induced through the slot 22 into the metering section 4 of the mixing passage.

As the suction head in the air metering section 4 of the mixing passage increases, a gradual lessening of flow toward the restricted opening 21 is produced. Then a gradually increasing positive flow downwardly through the slot 22 is produced which builds up gradually from idle an increased suction at the metering section 19 of the suction passage, thus inducing a greater flow of fuel from the fuel inlet 10. By reason of this construction the mixture flow is continuous and unobstructed from the metering section of the suction passage and therebeyond.

Beyond half open throttle the suction head in the suction passage 15 will gradually decrease, thereby decreasing the flow through the opening 21. However, the low flowing head previously referred to is of relatively small importance in the range of operation beyond half open throttle, for the reason that the suction head in the air metering section 4 of the mixing passage is such as to produce a suction head in the metering section 19 of the suction passage which is many times greater than the low flowing head previously referred to. For example, at and beyond half load the suction head in the metering section of the suction passage would normally be four inches or more, and the addition of one-fourth inch or less to this would not materially affect the fuel drawn through the inlet.

One of the principal objects of the present invention, as heretofore stated, is to provide means for delivering fuel through the fuel inlet continuously at a low, predetermined rate irrespective of the suction head in the metering section, in combination with unit controlling means operable at all loads, from idle to full load of the engine, to change the ratio of fuel to air supplied to the mixing passage and in conjunction with mechanism arranged to maintain uninterrupted mixture flow from beyond said fuel inlet. In the present embodiment of the invention this is accomplished by regulating the suction head at the fuel inlet.

In the particular construction illustrated, a choke valve or valves for controlling the admission of air into the inlet section of the metering passage is or are provided. Obviously when the choke valve or valves is or are in partially closed position the suction in the inlet section is much greater than when the choke valve or valves is or are more widely open. Obviously the suction head applied to the inlet section will increase proportionally the suction head at the metering section 4 of the mixing passage and at the air metering section 19 of the suction passage. By controlling the admission of air into the inlet section of the suction passage, therefore, the degree of depression below atmospheric pressure in the suction passage may be regulated, and such regulation in the present construction will increase proportionally the suction head at the air metering section 4 of the mixing passage and also the suction head at the metering section 19 of the suction passage, thus enabling a regulating means to be employed which will be operable to change the ratio of fuel to air supplied to the mixing chamber in conjunction with means heretofore described, which is operable to maintain uninterrupted mixture flow from beyond said fuel inlet. Such regulating means may also comprise a thermostatic device operable to regulate the degree of depression below atmospheric pressure in the metering section until a predetermined temperature is reached,

and thereafter operable gradually to diminish the amount of hot air admitted to the inlet section and simultaneously gradually to increase the amount of cold air admitted thereto, in the manner above described.

In the preferred construction illustrated herein means are provided for supplying both and cold air to the inlet section of the carburetor with thermostatically-controlled valves operable to vary the suction head in the inlet section during the warming up of the engine until normal operating temperatures are obtained, and thereafter operable to vary gradually the relative proportions of hot and cold air to maintain the air admitted to the mixing passage at a proper temperature.

This may be readily accomplished by connecting to the fuel inlet section a thermostatic control for carburetors of the type disclosed in my prior Patent No. 1,627,947, granted May 10, 1927. This carburetor control comprises a tubular T-shaped casing 54, one of the branches 55 of which is telescopically mounted in and secured to the inlet end of the inlet section 2, with the other branch 56 forming the cold air inlet extending in the opposite direction. The hot air inlet branch 57 preferably extends at right angles to the branches 55 and 56 and is adapted to be connected to a usual stove, such as a conduit surrounding the exhaust manifold.

The means for choking the hot air inlet preferably comprises a thermostatically-operated valve 58 of the character described in the patent aforesaid, which, upon cold starting, is located approximately in the choking position illustrated in Fig. 1. The construction and operation of this thermostatic valve is such that, as the engine warms up, the thermostat will gradually rotate the valve in a clockwise direction toward open position and, as the hot air from the engine increases beyond a predetermined amount, will rotate the valve beyond vertical position, so that it will act gradually again to choke the admission of hot air.

The thermostatically-operable valve 58 has connected to it an arm 59 which is connected by a link 60 to an arm 61, which in turn is connected to the shaft 62 of a choke valve 63 in a cold air inlet. The arrangement of the arms 59, 61 and the link 60 is such that the initial opening of the thermostatically-controlled choke valve 58, during cold starting and warming of the engine, has but little effect upon the opening of the cold air valve 63, but as the thermostatically-operable choke valve 58 moves through and beyond vertical position the cold air valve 63 is moved toward open position with relatively increasing rapidity.

Desirably the shaft 64 of the thermostatic valve is extended through the wall of the branch 57 and is provided with an arm 65 the end of which is connected to a rod 66 leading to the instrument-board of the automobile, thereby providing manual means for rotating the thermostatic choke valve further toward closed position than that which it normally assumes under the action of the thermostat, to increase the depression in the mixing passage and suction passage upon cold starting of the engine.

In the operation of the device, therefore, the operator may move the thermostatic choke valve of the hot air inlet to such choking position as to produce a suction head upon the fuel inlet 10 sufficiently to supply the desired increased amount of fuel for cold starting. Such manual choking mechanism may be immediately released upon the starting of the engine. Thereafter the proper suction head will be maintained by the action of the thermostat during the warming-up period of the engine, and also during atmospheric changes in temperature.

By reason of this construction a carburetor for an internal combustion engine is provided comprising a mixing passage having a metering section, means for controlling the flow through the mixing passage, a fuel inlet communicating with said metering section and subject to a suction head substantially proportional to the suction head at the metering section, with means for delivering fuel through said fuel inlet continuously at a low, predetermined rate during idle and light load operation in addition to the suction head in the metering section, co-ordinated with said mixing passage in such a manner as to produce uninterrupted mixture flow from said fuel inlet and therebeyond in combination with regulating means acting on a single fuel inlet to change the ratio of fuel to air supplied to the mixing passage, as distinguished from prior constructions, in which a plurality of passages for the fuel or the fuel-air mixture are provided which necessitate complicated controlling mechanism and which cause an interrupted or reversal of flow through certain of said passages, with a consequent erratic variation in the proportion of fuel to air delivered to the engine at some point in the load range of operation of the engine, thereby decreasing the efficiency of the engine, causing a wastage of fuel and precluding the smoothness of operation of the engine obtained by the present invention.

It will be understood that the particular embodiment of the invention disclosed herein is of an illustrative character and is not restrictive of the meaning and scope of the following claims.

Having thus described the invention, what is claimed as new, and desired to be secured by Letters Patent, is:

1. A carburetor for an internal combustion engine comprising a mixing passage having

a metering section, an inlet section, an outlet section subject to the suction of the engine, a throttle valve in said outlet section, a suction passage having a fuel inlet and leading downwardly therefrom to said metering section and having a branch intermediate of said fuel inlet and said metering section communicating with said outlet section beyond said throttle, a valve slidably mounted in said fuel inlet having a wall complementary to a portion of the wall of said fuel inlet and chamfered on the opposite side, and means for maintaining said complementary walls in contact.

2. A carburetor for an internal combustion engine comprising a mixing passage having a metering section, an inlet section, an outlet section subject to the suction of the engine, a throttle valve in said outlet section, a suction passage having a fuel inlet and leading downwardly therefrom to said metering section and having a branch intermediate of said fuel inlet and said metering section communicating with said outlet section beyond said throttle, a valve slidably mounted in said fuel inlet having a wall complementary to a portion of the wall of said fuel inlet and chamfered on the opposite side, and means for adjusting said valve having means for maintaining said complementary walls in contact.

3. A carburetor for an internal combustion engine comprising a mixing passage having a metering section, an inlet section, an outlet section subject to the suction of the engine, a throttle valve in said outlet section, a suction passage communicating with said inlet section having a fuel inlet and leading downwardly therefrom to said metering section and having a branch of restricted area intermediate of said fuel inlet and said metering section communicating with said outlet section beyond said throttle valve, said suction passage being unrestricted beyond said fuel inlet and adapted to permit uninterrupted mixture flow at all times from said fuel inlet to said mixing passage, a fuel reservoir surrounding said fuel inlet and communicating therewith, means for supplying fuel to said reservoir including a regulating valve, float sections symmetrically positioned with relation to said fuel inlet, lever mechanism intermediate of said float sections and said regulating valve operable to transmit a sufficiently large and substantially constant multiplied force to said regulating valve regardless of the inclination of the reservoir thereby to maintain the liquid level in said reservoir with only small variations in height slightly below said fuel inlet during idle and light load operation of the engine.

4. A carburetor for an internal combustion engine comprising a mixing passage having a metering section, an inlet section, an outlet section subject to the suction of the engine, a throttle valve in said outlet section, a suction passage communicating with said inlet section, a fuel inlet communicating therewith, said suction passage leading downwardly therefrom to said metering section and having a branch of restricted area intermediate of said fuel inlet and said metering section communicating with said outlet section beyond said throttle valve, said suction passage being unrestricted beyond said fuel inlet and adapted to permit uninterrupted mixture flow at all times from said fuel inlet to said mixing passage, a fuel reservoir surrounding said fuel inlet and communicating therewith, means for supplying fuel to said reservoir including a regulating valve, float sections symmetrically positioned with relation to said fuel inlet, lever mechanism intermediate of said float sections and said valve operable to transmit a sufficiently large and substantially constant multiplied force to said regulating valve regardless of the inclination of the reservoir thereby to maintain the liquid level in said reservoir, with only small variations in height, slightly below said fuel inlet during idle and light load operation of the engine, a valve seat for said valve, and means for adjusting the height of said valve seat to fix the liquid level of the fuel in said reservoir relatively to said fuel outlet.

5. A carburetor for an internal combustion engine comprising a mixing passage having a metering section, an inlet section, an outlet section subject to the suction of the engine, a throttle valve in said outlet section, a suction passage communicating with said inlet section, a fuel inlet communicating therewith, said suction passage leading downwardly from the fuel inlet to said metering section and having a branch of restricted area intermediate of said fuel inlet and said metering section communicating with said outlet section below said fuel inlet and beyond said throttle valve, said suction passage being unrestricted beyond said fuel inlet and adapted to permit uninterrupted mixture flow at all times from said fuel inlet to said mixing passage, and means operable to regulate the degree of depression below atmospheric pressure at said fuel inlet.

6. A carburetor for an internal combustion engine comprising a mixing passage having a metering section, an inlet section, an outlet section subject to the suction of the engine, a throttle valve in said outlet section, a suction passage communicating with said inlet section having a fuel inlet and leading downwardly from the fuel inlet to said metering section and having a branch of restricted area intermediate of said fuel inlet and said metering section communicating with said outlet section below said fuel inlet and beyond said throttle valve, said suction passage being unrestricted beyond said fuel inlet and adapted to permit uninterrupted mixture

flow at all times from said fuel inlet to said mixing passage, and regulating means including a thermostatic device operable to regulate the degree of depression below atmospheric pressure in said inlet section.

7. A carburetor for an internal combustion engine comprising a mixing passage having a metering section, an inlet section, means for admitting respectively hot and cold air thereto, an outlet section subject to the suction of the engine, a throttle valve in said outlet section, a suction passage communicating with said inlet section having a fuel inlet and leading downwardly from the fuel inlet to said metering section and having a branch of restricted area intermediate of said fuel inlet and said metering section communicating with said outlet section below said fuel inlet and beyond said throttle valve, said suction passage being unrestricted beyond said fuel inlet and adapted to permit uninterrupted mixture flow at all times from said fuel inlet to said mixing passage, and regulating means, including a thermostatic device, subject to the temperature of the hot air admitted to said inlet section, and means operable thereby to regulate the degree of depression below atmospheric pressure in said metering section until a predetermined temperature is reached, and operable thereafter gradually to diminish the amount of hot air admitted to said inlet section and simultaneously to increase the amount of cold air admitted thereto.

8. A carburetor for an internal combustion engine comprising a mixing passage having a metering section, an inlet section, an outlet section subject to the suction of the engine, a throttle valve in said outlet section, a suction passage, a fuel inlet communicating therewith, said suction passage leading downwardly therefrom to said metering section and communicating therewith through a transverse slot having a length greater than the normal diameter of the suction passage and having a branch intermediate of said fuel inlet and said slot communicating with said inlet section beyond said throttle, said suction passage being unrestricted beyond said fuel inlet and adapted to permit uninterrupted mixture flow at all times from said fuel inlet to said mixing passage, and a shield in front of and in proximity to said slot operable to increase the suction head in said suction passage relatively to the suction head in the air metering section under certain operating conditions.

9. A carburetor for an internal combustion engine comprising a mixing passage having a metering section, an inlet section, an outlet section subject to the suction of the engine, a throttle valve in said outlet section, a suction passage communicating with said inlet section having a fuel inlet and leading downwardly therefrom to said metering section and having a branch of restricted area intermediate of said fuel inlet and said metering section communicating with said outlet section beyond said throttle valve, a fuel reservoir surrounding said fuel inlet and communicating therewith through a small orifice with a chamfered inlet leading to the conduit of said fuel inlet, a valve slidably mounted in said fuel inlet having a wall complementary to a portion of the wall of said fuel inlet and chamfered on the opposite side, and means for maintaining the complementary walls in contact.

In testimony whereof, I have signed my name to this specification.

MERL R. WOLFARD.