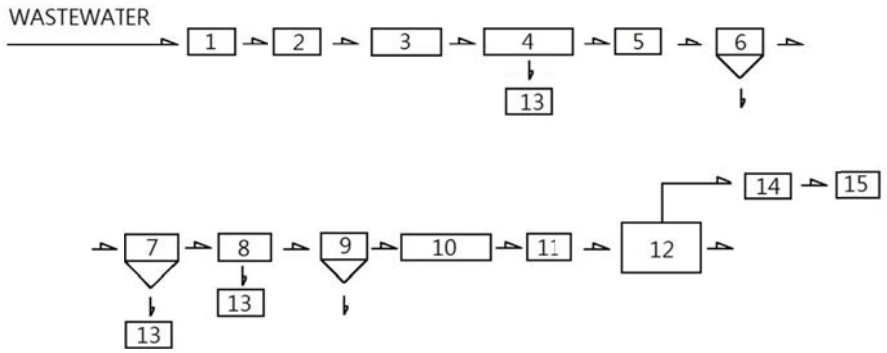

FIG. 1

Ms. Dipal Rajesh Dhabhai
Registered Patent Agent
For and on behalf of the Applicant