Dec. 29, 1964 J. COURTIN 3,163,161

TRAVELING WAVE AIR MASSAGING METHOD

Filed Aug. 2, 1962 8 Sheets-Sheet 1

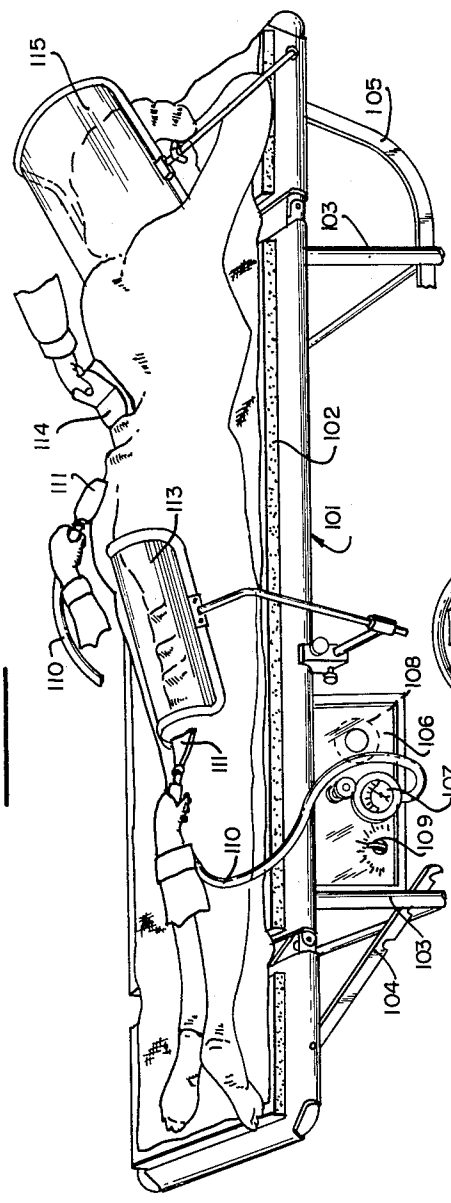


FIG. 1.

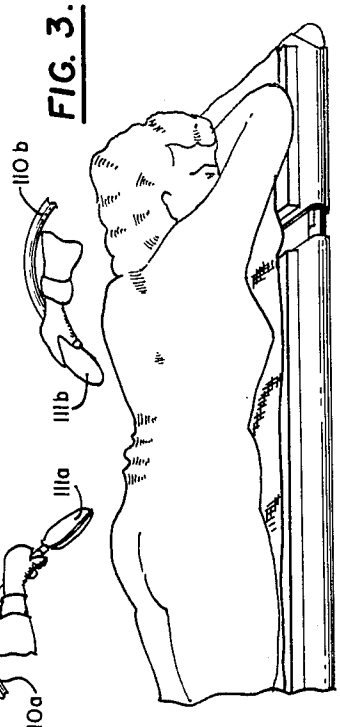


FIG. 3.

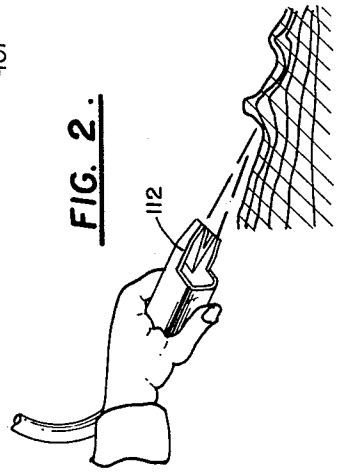


FIG. 2.

INVENTOR

Jacques Courtin

BY Moore, Wall and Pollock

ATTORNEYS

TRAVELING WAVE AIR MASSAGING METHOD

Filed Aug. 2, 1962 8 Sheets-Sheet 2

FIG. 4.

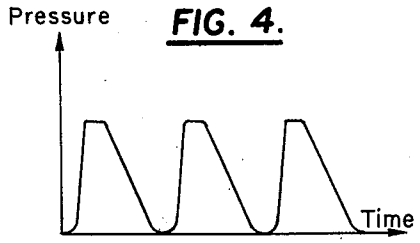


FIG. 5.

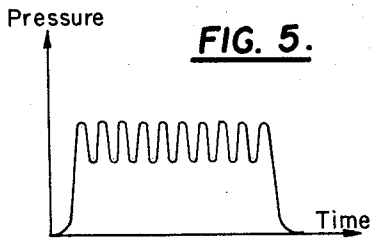


FIG. 6.

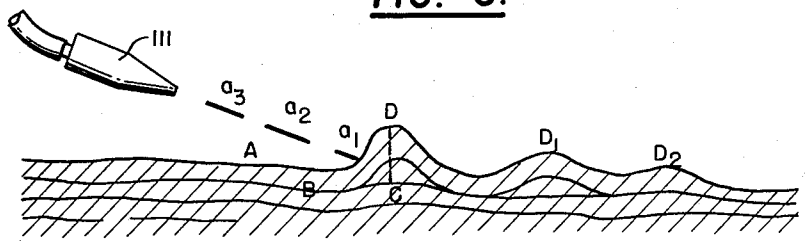


FIG. 7.

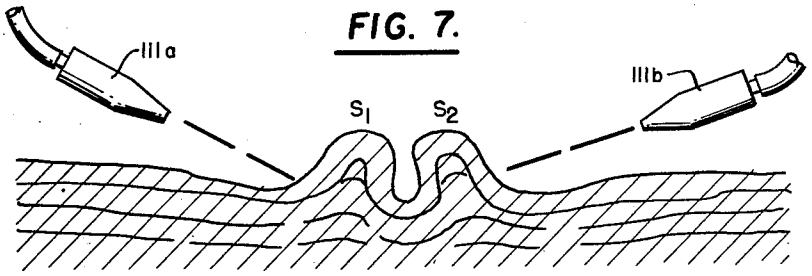


FIG. 21.

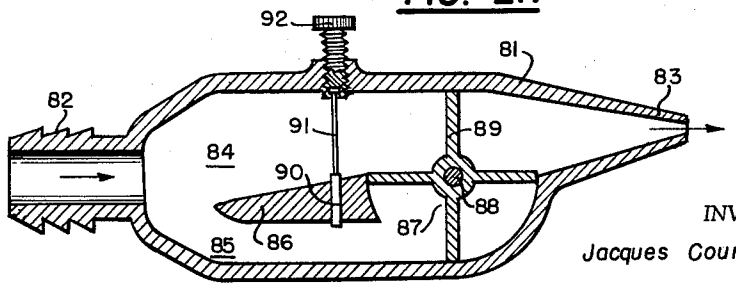


INVENTOR
Jacques Courtin

BY Moore, Hall and Pollock

ATTORNEYS

TRAVELING WAVE AIR MASSAGING METHOD

Filed Aug. 2, 1962 8 Sheets-Sheet 3

FIG. 8.

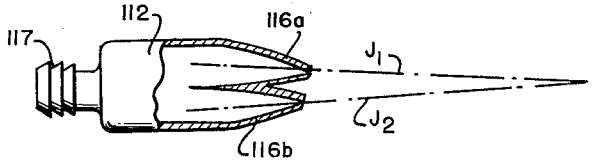


FIG. 9.

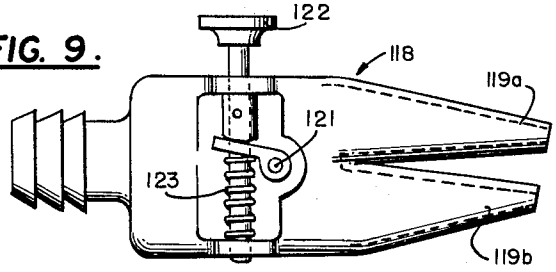


FIG. 10.

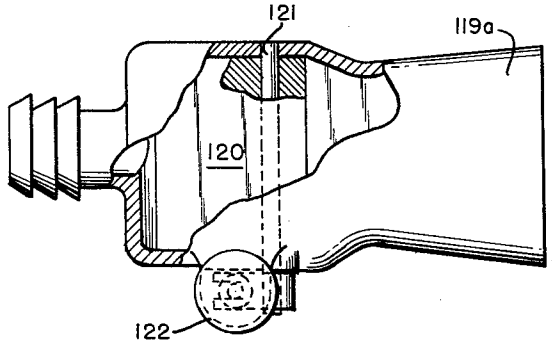


FIG. 11.

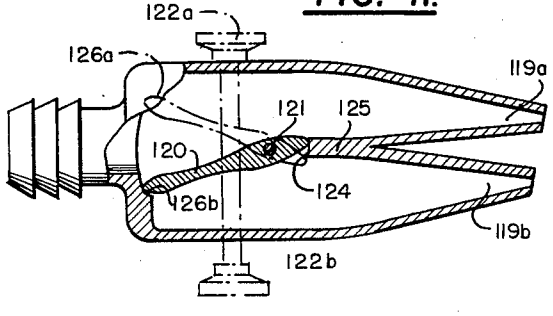


INVENTOR
Jacques Courtin
BY Moore, Hall and Pollock
ATTORNEYS

Dec. 29, 1964 J. COURTIN 3,163,161

TRAVELING WAVE AIR MASSAGING METHOD

Filed Aug. 2, 1962 8 Sheets-Sheet 4

FIG. 12.

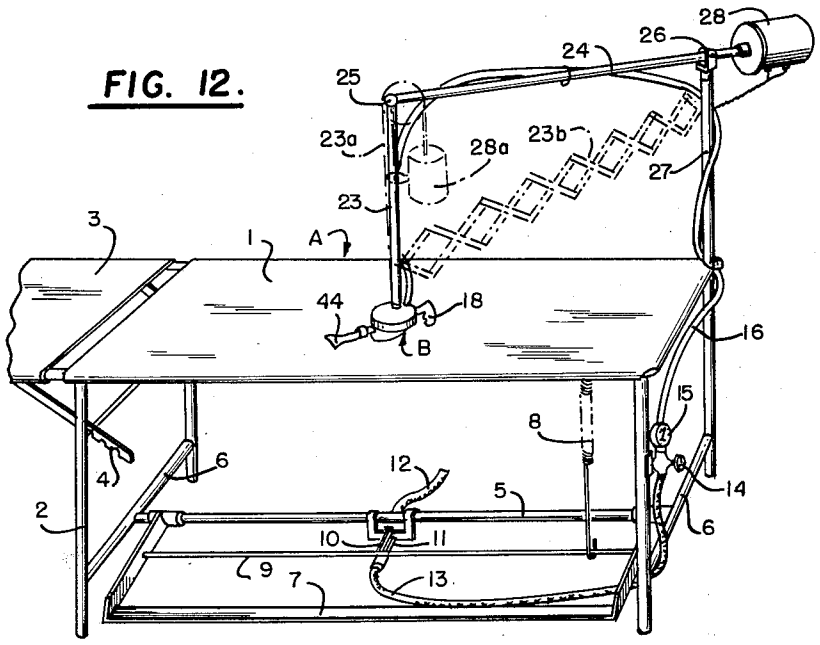


FIG. 13.

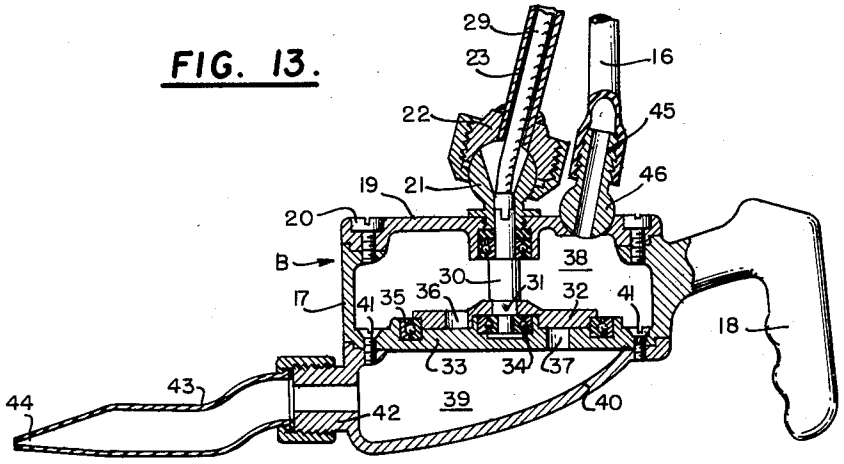


INVENTOR
Jacques Courtin

BY Moore, Hall and Pollock

ATTORNEYS

Dec. 29, 1964 J. COURTIN 3,163,161

TRAVELING WAVE AIR MASSAGING METHOD

Filed Aug. 2, 1962 8 Sheets-Sheet 5

FIG. 14.

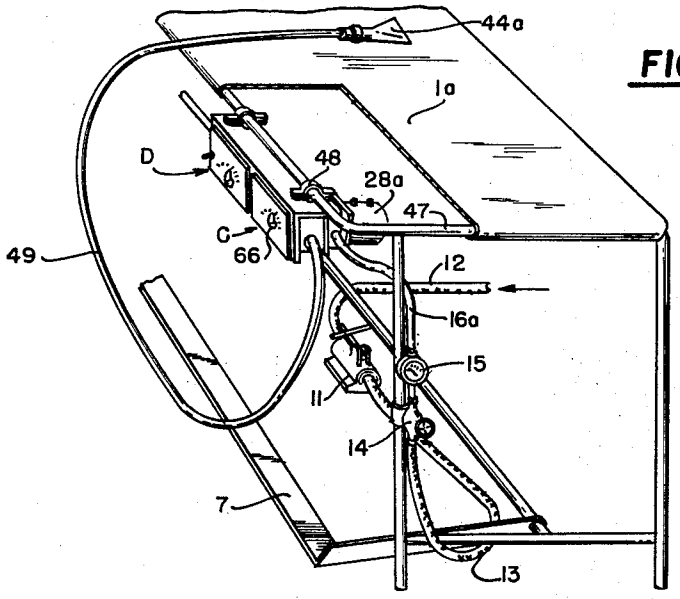


FIG. 17.

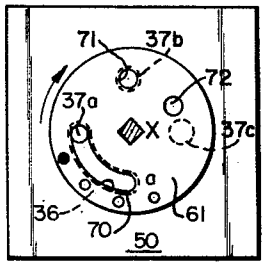


FIG. 18.

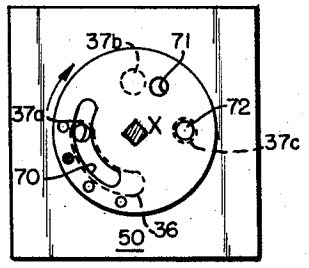


FIG. 19.

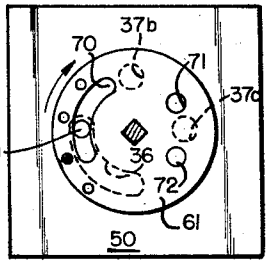


FIG. 20.

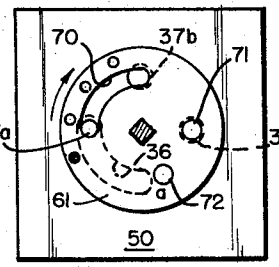


INVENTOR

Jacques Courtin

BY Moore, Hall and Pollock

ATTORNEYS

Dec. 29, 1964 J. COURTIN 3,163,161

TRAVELING WAVE AIR MASSAGING METHOD

Filed Aug. 2, 1962 8 Sheets-Sheet 6

FIG. 15.

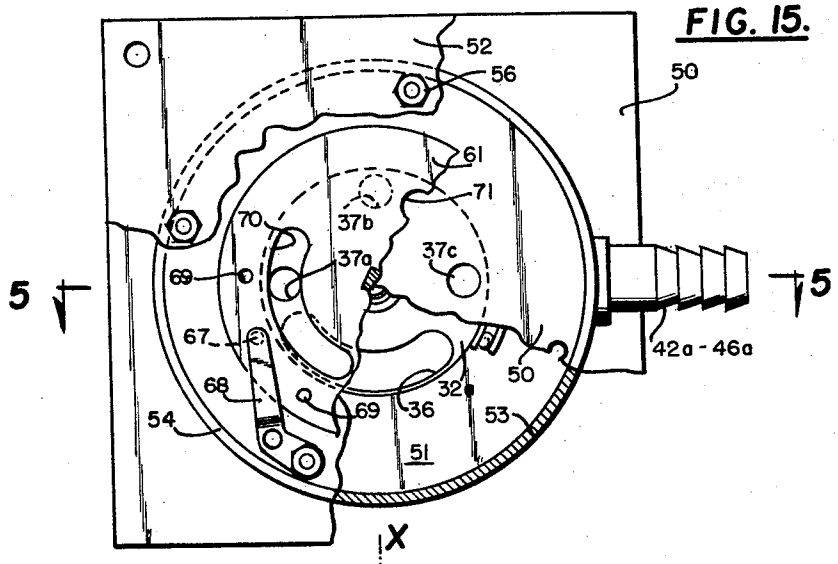


FIG. 16.

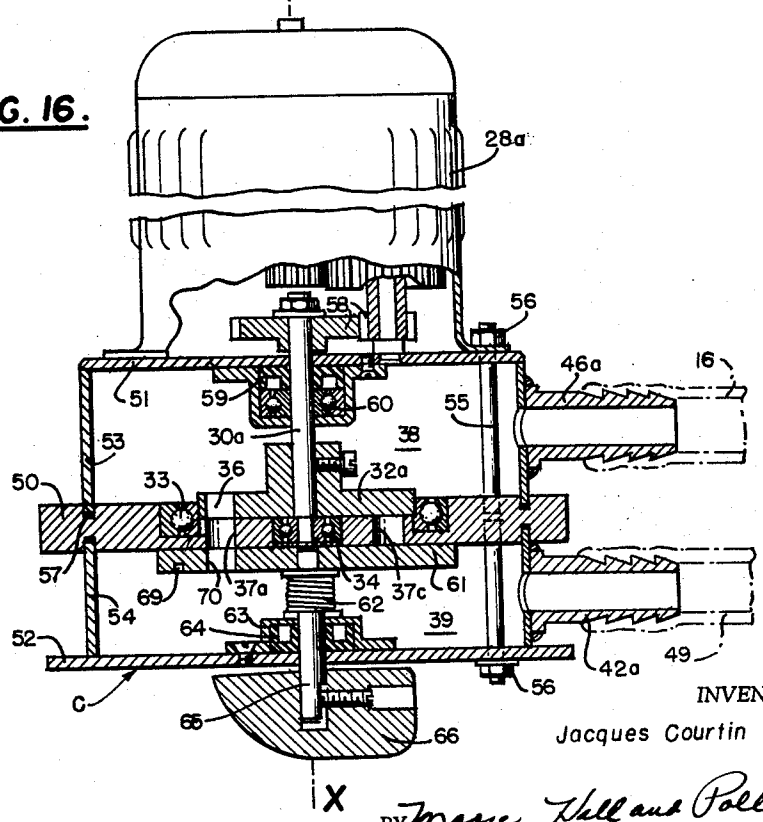


INVENTOR

Jacques Courtin

BY Moore, Hall and Pollock

ATTORNEYS

TRAVELING WAVE AIR MASSAGING METHOD

Filed Aug. 2, 1962 8 Sheets-Sheet 7

FIG. 22.

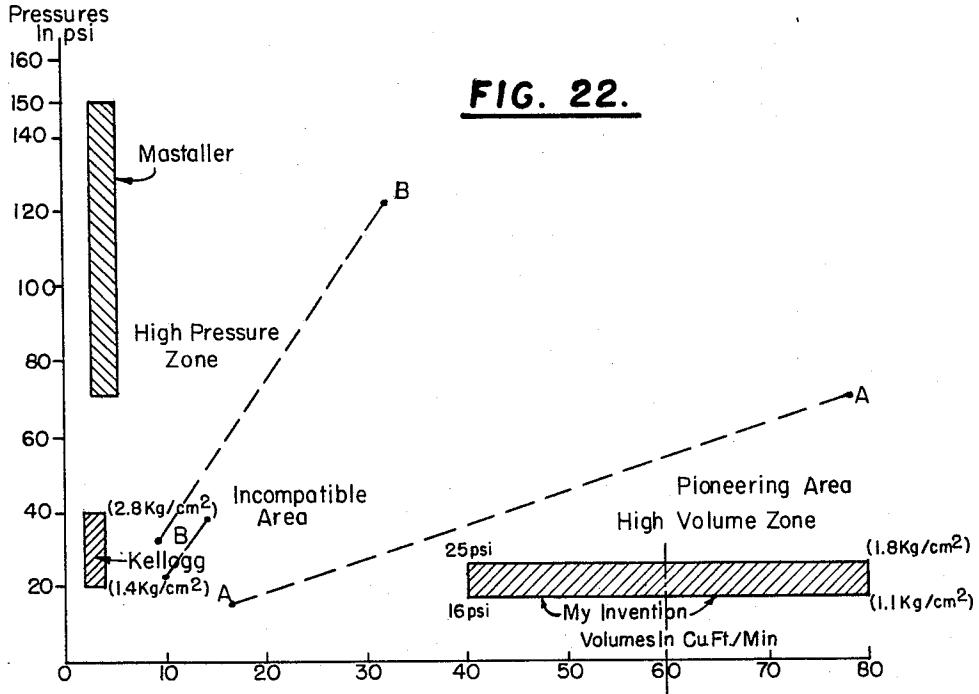


FIG. 23.

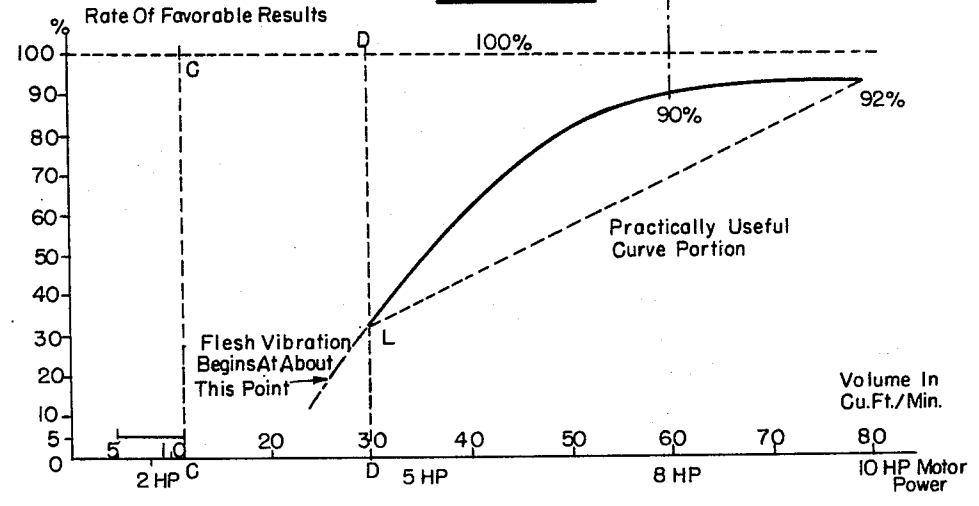


INVENTOR

Jacques Courtin

BY Moore, Hall and Pollock

ATTORNEYS

Dec. 29, 1964 J. COURTIN 3,163,161

TRAVELING WAVE AIR MASSAGING METHOD

Filed Aug. 2, 1962 8 Sheets-Sheet 8

FIG. 24.

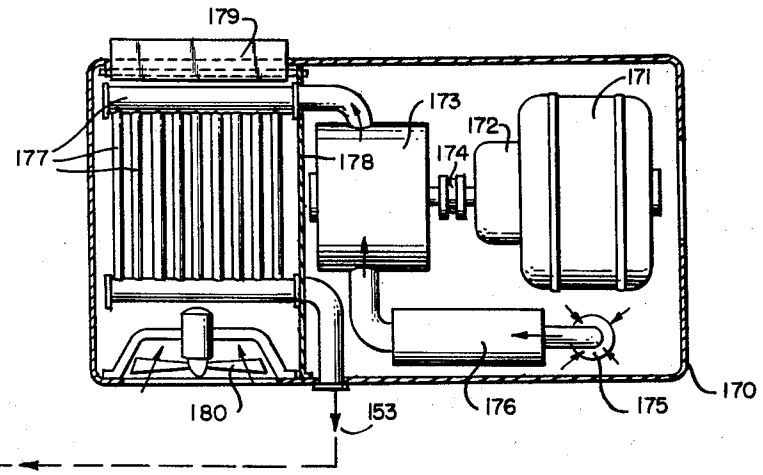


FIG. 25.

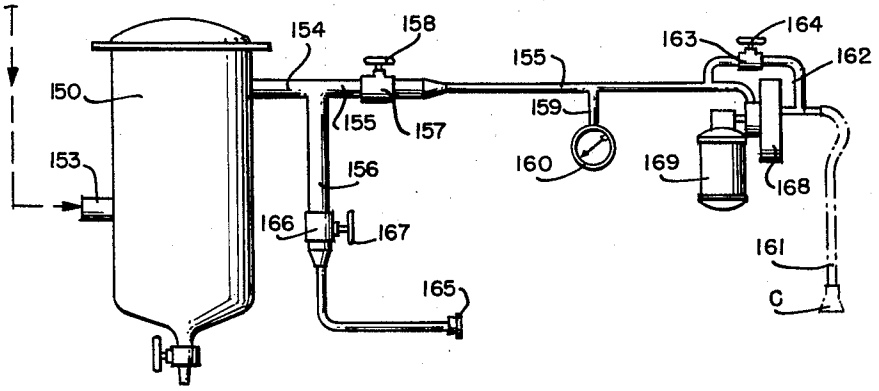


INVENTOR

Jacques Courtin

BY Moore, Hall and Pollock

ATTORNEYS

United States Patent Office 3,163,161 Patented Dec. 29, 1964



# 3,163,161
# TRAVELING WAVE AIR MASSAGING METHOD

Jacques Courtin, 7 Rue Guenegaud, Paris, France

Filed Aug. 2, 1962, Ser. No. 214,236
25 Claims. (Cl. 128—38)

The present invention concerns a method of massaging the body by using large volumes of air at low pressure to produce deep traveling waves or ridges in the skin and flesh of the body under treatment and equipment for practising the method.

This application is a continuation-in-part of U.S. application Serial No. 716,234 filed February 1958 for Pulsating Air Massaging Method and Equipment, which is in turn a continuation-in-part of U.S. application Serial No. 627,886 and now Patent No. 2,962,022 filed December 12, 1956 for Compressed Air Massaging Equipment. Reference is made to my copending application Serial No. 737,281 and now Patent No. 3,058,461 filed May 23, 1958 for Massaging Installation and Control Apparatus Therefor.

It is an object of the invention to teach the method of and to provide apparatus for, treating a human body with air in high volume at low pressure and directed at a small angle to the surface of a body under treatment, with the volume, pressure and direction of air flow from an application unit all having related values such that they produce deep traveling waves or ridges in the skin and flesh of a body under treatment, the deep traveling ridges being produced whether the application unit remains in a stationary position or is moved slowly over the body being treated.

The method described in patent application Serial No. 627,886 and now Patent No. 2,962,022 has been developed and is extended to include treatment of adipose tissues through a kneading of these tissues by producing deep traveling waves and ripples therein and also by effecting a sidewise rolling motion of the tissues under the effect of a jet of air which, when interrupted or deflected, allows the tissue to spring back from its fully extended position.

It is an object of the invention to provide means for supplying a large volume of air flow over a surface being treated, so that the dynamic effect of the moving air, as distinct from its pressure effect, is instrumental in obtaining the best results, particularly when the body under treatment is supported in a substantially horizontal position in which the muscles are most relaxed.

It is an object of the invention to provide means supplying a large volume of canalized air flow impinging upon the treated surface.

Another object of the invention is to cause the passage of a large volume of air flow through a tunnel-like canalizer applied on the body surface to be treated, the wall of said tunnel comprising a rigid wall portion, and another portion of said tunnel wall thus consisting in the portion of the body surface to be treated, and to cause said tissues to move lengthwise back and forth in deep traveling waves under the effect of said flow of canalized air.

A related object of the invention is to cause the passage, onto the body surface to be treated of a large volume of air flow canalized on said body surface, delivered at a low pressure, so as to provide a concentration of air under the canalizer and a depression of the tissues, thus increasing the efficiency of the air flow and limiting the volume of the air flow to an economical value.

It is an object of the invention to provide means for vibrating the air flow at its point of application on the tissues, so as to effect a shaking in depth of the deposits within the cells of the tissues and thereby loosen these deposits.

Another object of the invention is to provide a pulsating air flow, the impact of each pulsation being a form of treatment adapted to circumstances and used independently of or combined with the vibrating of the air flow.



It is an object of the invention to provide a plurality of nozzles discharging jets of compressed air directed towards a tissue location which catch the tissues in a two-directional pressure similar to a two-handed combined action.

Another object of the invention is to provide air nozzles, conjointly operated in pairs and including means for vibrating or pulsating the air flowing therethrough.

Another object of the invention is to provide means unitary with the nozzle to vibrate or pulsate the air flowing therethrough.

Another object of the invention is to cause the air flowing through the nozzle to actuate means which are unitary with said nozzle and vibrate or pulsate the air issuing from the latter.

It is an object of the invention to eliminate the fatigue inherent in massaging by hand which does not permit efficient work after the first three or four sessions of the working day of a masseur and the resulting rapid decrease in the quality of the massages performed.

Initial work with jets of highly compressed air resulted in localized depression of the flesh at the point of impact of the air blast. Displacement of the air nozzle displaced location of the flesh depression, but with little practical effect or results. That is, little if any of the beneficial results of a good massage were achieved and care had to be exercised to avoid pains and bruises caused by the higher pressure. When the nozzle is moved far enough away from the body to avoid such pains and bruises effective control of the location of the impact area causing the flesh depression is lost and satisfactory results are not obtained.

In the practise of the invention described in the aforesaid U.S. application S.N. 627,886 and now Patent No. 2,962,022, it was found advantageous to avoid higher air pressures because the point of impact upon the body was too narrow, the effects can be harmful and results were unsatisfactory.

Higher air pressures work on the body tissues like a hard thumb and their effects are similar. Contrary to this, the effect of the method of the present invention can be compared with that obtained over a greater area by a large hand, but is softer than a hand and thus avoids contact bruises or damage to bodies irrigated by vessels having poor circulation.

It has therefore been practical to reduce very substantially in a novel way the pressure of the air stream, while considerably increasing the rate of air flow over the portion of body to be treated, so that the dynamic action and the weight of the volumes of air flowing per second over said portion are among the principal factors intervening in said treatment.

Although the equipment needed is admittedly more costly and elaborate than that required with higher air pressure and less flow, the effects of what is called for the purpose of the invention "volume massaging" are deeper and more durable than that of higher pressures, yet there is absolutely no danger of bruising the skin or the blood vessels, because the action of a large-volume air flow results in simultaneous action on a surface of impact approximating that of a hand as opposed to the surface of a thumb.

In practise, the massaging equipment must be able to cope with all sorts of body conditions, including borderline cases in which the blood vessels are weak. The invention, by its "volume" action, covers the whole range, including extreme cases for which no other massage device would be satisfactory or even safe to operate.

A further improvement of the volume method of air

massage consists in increasing the effect of the air flow by superimposing a vibration of about 8 to 20 cycles per second. This vibration at close range under pressure shakes the inner elements of the cells at a natural frequency. The effect of the vibration increases the efficiency of the treatment in cases which require more active deep kneading.

The 8 cycles per second to 20 cycles per second range is a true pulsating air treatment, in which the deep ridges created in the body surface by the air flow have time to recover slightly from the air pressure, and while the tissues are returning to their initial position because of their natural elasticity, the following air pulse strikes said surface with added effect. In this fashion, it has been found possible to increase the kneading effect within the tissues and the draining of the cells.

The pulsations and vibrations of the air jets are provided by means which are adjustable in frequency.

By combining two nozzles operating in the same direction at a convergent angle, or by using two nozzles operating in opposition, or at right angles, it has been possible to create interference ridges designed to increase still further the efficiency of the treatment without any damage to the blood vessels, tissues or skin.

In accordance with the treatment and the subject, the interference of the air jets as well as the timing of the air pulses of the two nozzles, provide a hitherto unknown range of possibilities.

The devices for vibrating and pulsating the air flow are driven either electrically or mechanically, or within the nozzle by hand means, or by the action of the air flowing through the nozzle.

To carry out the invention, the blower nozzle is associated with a pulsating device which can be incorporated.

Although the pulsating device may be derived from conventional systems in the compressed air equipment art, owing to the special conditions of this application, an example is given of a motor-driven rotary closing member or valve which insures during the closing periods as good a fluid-tightness as possible (any loss of fluid-tightness is manifested by both an increase in the flow of compressed air and a decrease in the efficiency of the massage resulting from the damping of the vibration or pulsation amplitude) consistent with a simple, strong and light construction.

Maximum efficiency together with economical volume flow can be obtained by incorporating the rotary closing member or valve in the blower nozzle, since the interconnection of these two devices by a flexible pipe tends to damp the pulsations, the damping effect increasing with the length of the flexible pipe. In this case, the motor is also preferably incorporated in the blower nozzle or connected thereto by a flexible shaft, which represents increased weight and inertia and a consequent fatigue of the operator who must hold the nozzle, which has a tendency to vibrate in his hand. It will be found helpful to support the blower nozzle by an articulated suspension incorporating a counter-weight fixed to the ceiling or any other support, or alternatively, by an orientable support, for example, a scissors or toggle arrangement which is pivoted to the wall of the treating cabinet.

However, provided that the flexible pipe has a length not exceeding six feet, it is possible to leave the blower nozzle completely free at the end of a flexible pipe which is connected to the outlet of the pulsating device. In this case the latter is permanently fixed to the massage table or any other fixed support.

The compressed air used in the massaging process according to the invention may be obtained by any method, for example, by means of an impeller fan or a compressor. It is well known that the compression of a volume of air causes an increase of the air temperature; in the conditions of the invention this temperature may rise over 200° F. This temperature decreases but a little at the point of the air release, so that this air must be cooled. This can be accomplished by means of an intermediary air-reservoir provided between the compressor and the blowing nozzle.



Preferably, the air is taken directly at the outlet of the compressor, no reservoir being provided.

Another feature of the invention consists in the manner the air flow issued from the compressor is utilized in the massaging process, the air being used immediately after compression. It is accordingly an object of the invention to provide a variable capacity heat exchanger connected to the outlet of the compressor control of the temperature of the massage air in accordance with the requirements of the particular treatment appropriate to the body to be massaged. This treatment may require air flow of a temperature within a selected range of temperature with a steady air flow or one which is pulsated or vibrated at an optimum frequency or within a selected range.

This process of air treatment at a controlled temperature by removal of a variable part of the heat generated in the compression differs from treatment in which compressed air released from a storage tank is preheated before it reaches the body.

Further features and advantages of the invention will be apparent from the ensuing description with reference to the accompanying drawing which are presented as illustrative merely and to which the invention is in no way restricted. Like numerals refer to like parts throughout.

In the figures:

FIGURE 1 is a side elevation showing equipment for carrying out the massaging method of the invention;

FIGURE 2 is a fragmentary partial sectional view showing an example of the action of the equipment;

FIGURE 3 is a fragmentary side elevation of another example of the action of the equipment;

FIGURES 4 and 5 are schematic explanatory diagrams of air pressure vibrations used in the method of the invention to form the pulsations and vibrations;

FIGURE 6 is a diagrammatic sectional view showing the formation of waves in the tissues by the compressed air massaging method;

FIGURE 7 is a view similar to FIGURE 6 corresponding to a second example of the action of equipment of the invention;

FIGURE 8 is a partial longitudinal sectional view of a first example of a double jet blower nozzle used in the massaging equipment;

FIGURES 9, 10 and 11 are side, plan and longitudinal sectional views respectively of an alternating jet nozzle used in the massaging equipment;

FIGURE 12 is a diagrammatic perspective view of a massage table provided with a device embodying the invention including a combined blower nozzle and pulsating device;

FIGURE 13 is a vertical sectional view on an enlarged scale of the device of the invention;

FIGURE 14 is a perspective view, with a part cut away, of another table in which the blower nozzle receives pulsating air from a pulsating device permanently fixed to said table;

FIGURE 15 is a front view, with a part cut away, of the pulsating device shown in FIGURE 3;

FIGURE 16 is a plan view and a partial sectional view, taken along line 5—5 of FIGURE 4, of the pulsating device;

FIGURES 17–20 are diagrammatic views of the various positions of an adjustable closing member or valve provided in said device and permitting modification of the cycle of the pulsations;

FIGURE 21 is a diagrammatic longitudinal sectional view of a blower nozzle which receives compressed air and discharges pulsating air according to the invention;

FIGURE 22 is a diagram showing air pressure-volume relationships and the high volume-low pressure area used by the present invention;

FIGURE 23 is a diagram of efficiency of horsepower utilization within the high volume-low pressure area in which the invention is practised;

FIGURE 24 is a plan view of one form of compressor-cooler unit according to the invention;

FIGURE 25 is an elevation of one form of air flow control for use with the assembly of FIGURE 1.

The massaging equipment shown in FIGURE 1 comprises a support table 101 providing a resilient padded surface or platform 102 of length and width suitable to receive a supine or prone human body. Platform 102 is supported by legs 103 and is provided with hinged extensions for head and feet further supported by members 104 and 105. This table 101 supports the person to be massaged in a horizontal position, which insures a state of perfect relaxation of the muscles of this person.

The table 101 carries a cabinet or enclosure 106 supplied with air under pressure by a pipe (not shown in the drawing). Housed in this enclosure 106 are various devices, for example, a pressure gauge 107, an air pulsating device 108, and a pulsation frequency variator-indicator 109. This list of devices is not intended to be limiting and could vary according to the types of apparatus used, whether intended for hospital use, special treatments or simple massage, as will be described hereinafter. A blower nozzle 111 leading from enclosure 106 is supplied with controlled air through the medium of a flexible pipe 110.

In the presently-described example, the nozzle 111 is fed with pulsating air and may be of a simple, single-slot type, such as that described in said U.S. patent application Serial No. 627,886. According to another example, this equipment comprises two nozzles $111^a$ and $111^b$ (FIGURE 3) which are respectively fed by two pipes $110^a$ and $110^b$; each of the nozzles constructed as shown at 112 (FIGURE 2, having two orifices for blowing pulsating air simultaneously or alternately in the manner of the nozzles shown in FIGURE 9–11 described hereinafter. The air pulsating device could be constructed in the manner of the device 108 fixed and housed in the enclosure 106 or its supply pipe and constitute a combined blower nozzle and pulsating device.

The massaging equipment preferably comprises various accessories, for example, similar to those described in said patent application, such as a channel-like member or canalizer 113, a scraper or stop block 114, and a screen 115 protecting the back of the neck and head of the person being massaged.

FIGURES 2–7 show several examples of the pulsating air massaging method of the invention and of the effects produced on the tissues during the treatment according to the invention.

Bringing a continuous jet of air directly towards the tissues maintains the latter constantaly depressed in a position of equilibrium. Contrary to this, the application of small masses or packets of air in a direction making a small angle with the surface of the body being massaged, creates a dynamic state in the tissues in the form of deep traveling ridges on the tissue surface and in depth.

The nozzle 111 shown in FIGURE 6 discharges small successive masses or packets of air diagrammatically shown by the lines $a^1$, $a^2$, $a^3$ . . . between which the spaces do not, of course, correspond to the actual separation in space, this diagrammatic example having been shown merely more clearly to describe the invention. It will be understood that a small mass of air acting at AB (FIGURE 6) compresses the tissues elastically; then, when the action of the air ceases, the tissues tend to spring back to positon CD and thus form a wave which progresses somewhat in the manner of a wave on the surface of a viscous liquid, especially as it could be subjected to a lateral pressure on its side. These waves are propagated as shown at $D^1$, $D^2$, . . . and become progressively damped.

The waves formed in a direction perpendicular to the surface of the tissues could be of variable amplitude, for example, about 1 cm. and more, or much smaller, for example, about 5 mm. In any case, this movement produces a deep massaging effect and avoids a continuous action which could result in traumatism. In healthy bodies amplitudes of several centimeters have been produced to advantage.



True stationary waves can be produced by disposing in the path of the wave movement a suitable stop, which may be in the form of a scraper 114 held in the hand, or in the form of a counterjet issuing from a second nozzle acting in the opposite direction to the first nozzle so as to form an interference pattern. In the latter case, the equipment of the invention would require two nozzles $111^a$, and $111^b$ (FIGURE 7) both of which supply jets of pulsating air so as to create two wave movements in opposite directions which interfere or combine algebraically with one another and create deep momentarily stationary waves such as $S_1$, and $S_2$, and provide a kneading of the tissues.

The frequency of the pulsations and their duration are regulated by any suitable devices some examples of which will be described hereinafter.

This frequency could be a low frequency, for example, about 2–8 cycles per second, in which case pulsations of the type shown in FIGURE 4 are obtained, in which the pressure could drop substantially down to 0 between two pulsations. It will be understood that it is advantageous to be able to regulate the frequency to obtain optimum effect; the frequency of jets should be related to the natural frequency of formation of the waves, which depends on the characteristics of elasticity and density of the treated tissues. To obtain optimum effect for minimum air consumption, there is preferably obtained in each particular patient a veritable effect of resonance by regulating the frequency of the pulsations to a suitable value.

If the frequency is increased beyond 8 cycles per second, the pressure normally does not drop to 0 and vibrations are obtained in the form shown in FIGURE 5. The frequency of these vibrations may be, for example, between 8 and 20 cycles per second, and these vibrations may be provided either continuously or in an interrupted manner in the form of "packets" or small masses of air $a^1$, $a^2$, $a^3$, . . . .

The method of the invention may be carried out by means of a double blower nozzle 112 of FIGURES 2 and 8, which supplies two convergent jets of air, the distance between the air outlet and the point of intersection of the jets being, for example, about 15–20 cm. This nozzle 112 could be used as an ordinary nozzle having a boosted action, the jets converging in this case on the surface of the body being massaged and making a small angle with this surface, or alternatively the two jets $j^1$ and $j^2$ could be used simultaneously but for different purposes, one acting to form the wave and the other for laterally shifting the crest of the wave previously formed.

The two noses of the nozzle could blow air in an alternating manner.

FIGURES 8–11 show examples of nozzles which permit obtaining these various effects.

The nozzle 112 shown in FIGURE 8 comprises two noses $116^a$ and $116^b$, orientated in such manner as to discharge jets $j^1$ and $j^2$ for effecting the treatment shown in FIGURE 2. Such a nozzle is connected by its inlet 117 to a pipe leading to the enclosure 105 supplying the pulsating air.

The nozzle 118 shown in FIGURES 9, 10 and 11 may be used to form a double alternating jet issuing successively from the noses $119^a$ and $119^b$. For this purpose nozzle 118 comprises a movable switching diaphragm wall 120 which is pivotably mounted on a pivot pin for the purpose of switching the stream of air toward one or the other of the noses $119^a$ or $119^b$. This wall 120 is controlled by an outer knob 122 which acts against the force exerted by a return spring 123 which returns the wall 120 to one of

the switching positions. One of these two positions is shown in full line and the other in dot-dash line in FIGURE 11. The forward end of the wall slides along a curved face 124 of a deflector 125. The wall 120 is held by the air pressure against its positioning abutments 126a and 126b and, when it has been brought to one of these positions, it remains there and exerts no force on the control device or knob 122. If desired, knob 122 could be replaced by two knobs 122a, 122b (FIGURE 11) which would control the position of the actuating rod without provision of a spring, the two extreme positions of this rod which connects the two knobs 122a and 122b corresponding to stable positions of the wall 120.

For carrying out the massaging method of the invention, one or two blower nozzles of one of the types described hereinbefore is preferably combined with a pulsating device which, as mentioned hereinbefore, could be connected to each of the nozzles by a flexible pipe. Alternatively, a pulsating device could be incorporated in each of these nozzles.

FIGURE 12 shows a massage table A comprising a platform 1 supported by legs 2 and on which the person being massaged lies, his head being raised, if desired, by a pivotable head support 3, the inclination of which is adjustable, for example, by means of a rack 4.

Mounted on a longitudinal bar 5 supported by two cross-members 6, bracing the legs 2, is a pedal 7 which is upwardly biased by a spring 8 and adapted to act through the medium of a rod 9 on a lever 10, controlling a closing means or valve 11. Valve 11 regulates the flow of air between a compressed air supply pipe 12 and a pipe 13 which leads to a pressure gauge-reducing valve 14, 15 carried by one of the legs of the table and supplying compressed air at suitable pressure to a flexible pipe 16. Flexible pipe 16 is connected to a combined device B which provides pulsating air flow adapted to be directed onto the body of the person being massaged.

One example of the device B is shown in FIGURE 13. It comprises a case 17 provided with a lateral handle or grip 18 enabling the masseur to hold it firmly in the hand. The case 17 is closed by a cover 19 held in position by screws 20. Fixed at the center of the cover 19 is the male part 21 of a ball and socket or swivel joint on which the female part 22 is mounted. The female part 22 is fixed to the end of an articulated tubular support consisting of two tubes 23 and 24 interconnected by a ball and socket or swivel joint 25. The tube 24 is pivoted at 26 to an extension 27 of one of the legs of the table 17 and it carries, at its end, an electric motor 28 which constitutes both a counterweight and a driving means for a flexible shaft 29 housed in the tubular support and fixed to the end of a shaft 30. Shaft 30 is fitted with a disc 32, having a flat-faced portion 31 which constitutes the active member adapted to provide the pulsating air.

The disc 32 has a hole or opening 36 which moves past an aperture 37 formed in the base 33 of the case 17 upon each rotation of the disc 32. This allows the compressed air to pass from upper chamber 38 formed inside the case 17 to a lower chamber 39 formed inside a cup 40 connected to the base 33 by screws 41. The passage of compressed air through the aperture 37 has a duration which is a function of the rotational speed of the disc 32 and of the effective areas of the opening 36 and aperture 37. The cup 40 is provided with a lateral connection 42 to which is connected by means of a flexible tube or pipe 43, a nozzle 44 (FIGURES 12 and 13). The nozzle 44 preferably has a flat narrow orifice suitable for directing onto the body of the person being massaged a narrow sheet of pulsating compressed air.

The non-pulsating compressed air enters the chamber 38 by way of the flexible pipe 16 connected to a connection 45 which terminates in a ball end 56 rotatably mounted in the cover 19.

The device B is used in the following manner:

The masseur holds this device by the handle 18 and places himself alongside the table A adjacent the pedal 7. Depressing the latter opens the valve 11 which admits compressed air into the pressure gauge-reducing valve 14, 15. The air at the required pressure and temperature enters the chamber 38. The motor 28, which is started up in the meantime, rotates the disc 37 which permits compressed air to pass from the chamber 38 into the blowing nozzle 44 at each rotation of the disc 32. A jet of pulsating air issues from nozzle 44 and strikes the body being massaged in the form of a particularly beneficial sheet.

The device B, which is suspended and counterbalanced by the weight of the motor 28, can be handled without difficulty by the masseur and the nozzle 44 can be readily directed at the desired angle.

If desired, the pulsating rate of the compressed air can be regulated by varying the rotational speed of the disc 32. To this end, there could be used an electric motor 28 of about 1/20 H.P., with poles to permit several speeds. For example, in the case of a three-speed motor 2, 6 or 10 poles could be used at will, which give about 3000, 1000 and 600 r.p.m., resepectively.

The flow of pulsating air issuing from the nozzle 44 is, of course, a function, on the one hand, of the pressure of the compressed air supplied by the pressure gauge-reducing valve, this pressure essentially varying with the massage to be effected, and, on the other hand, of the period during which the chambers 38 and 39 are put into communication by each full rotation of the disc 32.

For a given efficiency, the device B affords a substantial saving which may be as much as 20 to 30% over the quantity of compressed air normally required, and experience has shown that this saving may be obtained without diminishing the efficiency of the massage produced.

The support for the device B, set forth in the above described embodiment of articulated tubes 23 and 24 (FIGURE 2), could be replaced by any other support device, such as a chain suspension 23a and a counterweight 28a (shown in dot-dash line in FIGURE 12) attached to the ceiling of the massage room. Alternately, the device B could be supported by an extensible scissors or toggle links arrangement 25b or the like which is connected by swivel connections or otherwise either to an upright, such as the upright 27 of the massage table, or to one of the walls of the massage room.

As mentioned hereinbefore, the arrangement shown of the combined device B is advantageous from the theoretical point of view, as the pulsation device is in the immediate vicinity of the blower nozzle 44 and the pulsations produced in the compressed air are substantially undamped owing to the very small size of the chamber 39. However, this construction might constitute a slight hindrance to the masseur in his work. The pulsating device may, of course, be separated from the blower nozzle and fixed in position, on condition that it is connected to the nozzle by a flexible pipe of short length (for example, 1 m.–1.5 m.). A long connection interferes with the effectiveness of the pulsating device.

A suitable arrangement is shown in FIGURE 14 where the table A1 comprises a platform 1a having a support frame 47 to which is attached by means of clips 48, the pulsating device C and a rheostat D for regulating and supplying current to its motor 28a.

The device C is fed with compressed air by the flexible pipe 16a through the pressure gauge-reducing valve 14, 15, and the supply of compressed air being controlled by the pedal 7 through the valve 11. The pulsating air is piped from the device C to the very light blower nozzle 44a by a flexible pipe 49. The pulsating device C is fixed in position and as its weight is no longer of importance, the device can be adapted to advantage in such manner as to permit a selection between several pulsating cycles.

The device shown in FIGURES 15 and 16 comprises a

compressed air supply chamber 38 and a pulsating air chamber 39 formed between a central plate 50, two other plates 51 and 52 and cylindrical walls 53 and 54. These component parts are held together by rods 55 and nuts 56. The walls 53 and 54 could be welded to the plates 51 and 52 and engaged in two annular grooves in the central plate 50, sealing members 57 being provided in the bottom of the grooves.

The electric motor $28^a$ is mounted on the plate 51 and it drives, through the medium of a speed reducer 58, the shaft $30^a$ which extends into the chamber 38 through a sealing member 59 and is journalled in a ball bearing 60.

Fixed on the shaft $30^a$ is the disc $32^a$ adapted to produce the pulsations of the compressed air. This disc $32^a$ bears against a central thrust bearing 34, is centered in a peripheral bearing 33 and comprises, as in the first embodiment, a single arcuate opening 36 (FIGURE 15) which is concentric with the longitudinal axis XX of the device and has an angular extent of 90° between the centers of its two radiused ends.

The chamber 38 is provided with a fixed connection $46^a$ on which the pipe 16 is mounted, and the chamber 39 is provided with a connection $42^a$ connected to the blower nozzle $44^a$ by a flexible pipe 49.

The intermediate plate 50 is adapted to co-operate with the disc $32^a$ and comprises three circular apertures $37^a$, $37^b$ and $37^c$ whose diameters are equal to the radial width of the opening 36. The apertures $37^a$ and $37^c$ are diametrically opposed and the aperture $37^b$ is angularly spaced 90° from these apertures.

The device is completed by a regulating closing member or valve in the form of a disc 61 disposed in the chamber 39 and applied against the lower side of plate 50 by a spring 62 interposed between the disc and a cup 63. The cup 63 contains a sealing member 64 to insure that the chamber 39 is fluid tight where the shaft 65 extends therethrough. The disc 61 is keyed on the shaft 65 and can be shifted angularly by the latter from the exterior through the medium of a rotatable control knob 66 (FIGURES 14 and 16).

By means of knob 66, the disc 61 may be put into any one of four positions, which are spaced apart angularly and are determined by a pin 67 carried by a locking blade 68 (FIGURE 15) fixed to the plate 50, the pin 67 engaging in any one of four recesses 69 formed in the disc 61.

The disc 61 comprises an arcuate opening 70 which has an angular extent of 90° relative to the axis XX and is disposed about the latter at the same distance from this axis as the apertures $37^a$, $37^b$ and $37^c$ and the opening 36 of the disc $32^a$; the disc 61 also comprises two circular apertures 71 and 72 (FIGURE 17) situated the same distance from the axis XX. The aperture 71 is angularly offset 90° from the adjacent end of the opening 70 and the apertures 71 and 72 are disposed an angular distance apart which is less than 90°, so that when the aperture 71 coincides with the aperture $37^b$ of the plate 60, the aperture 72 is circumferentially offset relative to the aperture $37^c$ of this plate.

By means of the disc 61, it is possible to modify the period during which compressed air is transferred from chamber 39 to chamber 38 through the disc 61 and the plate 50, each position of the disc 61 being maintained by engagement of the pin 67 in one of the recesses 69.

The four possible positions are shown in FIGURES 17–20 in which the disc $32^a$ is shown to rotate in the direction of the arrows.

In FIGURE 17 the opening 70 is disposed in such manner that the end thereof nearest the aperture 71 coincides with the aperture $37^a$ of the plate 50, so that the aperure 71 of the disc 61 also coincides with the aperture $37^b$ of the plate, whereas the aperture 72 is out of alignment with the aperture $37^c$. In this way, the supply of compressed air to the chamber 38 occurs during half a rotation of the disc $32^a$. Air starts to be supplied when the opening 36 of the disc occupies the position shown in dotted line in FIGURE 17 and stops after the disc has rotated through 180° when the end of *a* of the opening 36 ceases to coincide with the apertures $37^b$ and 71.

In the position shown in FIGURE 18 the disc 61 has been turned to such position that the opening 70 uncovers the aperture $37^a$; the aperture 71 is no longer in alignment with the aperture $37^b$; on the other hand, the aperture 72 is in alignment with aperture $37^c$. Under these conditions, the opening 36 of the disc $32^a$ permits two successive pulses of air, each of which has a duration corresponding to a quarter of a rotation of the disc. The first pulse takes place while the opening 36 moves in front of the aperture $37^a$, and the second pulse when the opening 36 moves in front of the coincident apertures $37^c$ and 72.

FIGURE 19 shows the third position assumed by the disc 61 and corresponds to a passage of compressed air once in every rotation of the disc $32^a$ and during a quarter of a rotation thereof. In this position, only the opening 70 of the disc 61 continues to uncover the aperture $37^a$ of the plate 50, the apertures 71 and 72 being offset relative to the apertures $37^b$ and $37^c$. Thus, there is passage of compressed air only while the opening 36 moves in front of the aperture $37^a$ (quarter of a rotation).

FIGURE 20 shows the position in which there is a passage of compressed air during three quarters of a rotation of the disc $32^a$. In this position, the disc 61 uncovers the apertures $37^a$ and $37^b$ and the aperture 71 is in alignment with the aperture $37^c$. The three plates are therefore uncovered and the opening 36 of the disc $32^a$ permits passage of air from the illustrated position up to the moment when its end *a* passes by the coincident apertures $37^c$ and 71 after three quarters of a rotation of the disc 61.

The device, therefore, provides four pulsating rates and the rheostat D permits the frequency of the cycles to be regulated in the manner described with respect to the first embodiment.

FIGURE 21 shows a nozzle combined with a pulsating device adapted to be fixed to the end of the pipe supplying non-pulsating compressed air and to emit pulsating air. This pulsating device comprises a hollow body 81 provided with a connection 82 and an outlet nozzle 83, the interior of the body 81 being divided into a first chamber having two passages 84 and 85 separated by a partition 86 which is in such position that the passageway 85 has a smaller cross-sectional area than the passageway 84, and a second chamber 87 disposed on the downstream side of the partition 86 relative to the air flow. A wheel 88 provided with a number of blades 89 (for example, four blades) is rotatably mounted in the chamber 87. The passageway 85 can be completely or partially closed by a valve blade 90 connected to a rod 91 which extends through the wall of the nozzle and is connected to a knurled knob 92 which is screw-threadedly engaged in the body 81 and permits regulation of the position of the rod 91 when knob 92 is rotated.

Such an arrangement constitutes an impulse turbine driven by the air acting on the blade 89 positioned across the passageway 84. By shifting the valve blade 90 the turbine can be braked to a variable extent so that variation in its rotational speed modifies the frequency of the pulsations of the air issuing from the nozzle.

FIGURES 24 and 25 present in schematic form one system for practising the invention shown and discussed in copending application Serial No. 737,281 and now Patent No. 3,058,461, supra. A body or container 150 is mounted inside a suitable housing 170 and comprises a porcelain oil-removing filter and felt which retains the last traces of oil and water in suspension in the compressed air through pipe 153. A lower drain plug permits discharge of the traces of the retained oil and water. Filtered compressed air issues from the upper part of the body 150 at header 154 which supplies two pipes 155 and 156.

Main branch pipe 155 contains adjustable valve 57 which can be operated by means of a control knob 158 which is positioned on the front of the apparatus where it is readily accessible to the operator. A pressure gauge 160 is connected to pipe 155 downstream from valve 157 by pipe 59 and positioned so as to be readily visible. Pipe 155 is connected to air pulsating device 168 the moving element of which is driven by a motor 169. Pulsating device 168 may correspond to that shown in FIGURE 13, FIGURE 16 or as described in copending application Serial No. 716,234, now abandoned, supra, or equivalent devices now under tests.

A flexible pipe or hose 161 is connected to the outlet of pulsating device 168 and terminates in a nozzle C, corresponding to any of those described herein. Pulsating device 168 is provided with a by-pass 162 containing a valve 163 actuated by knob 164 accessible to the operator.

Branch pipe 156 is provided for supply of compressed air to accessories which may be connected at outlet 165 and regulated by a valve 166 controlled by handle 167 readily accessible to the operator.

The air supply system located in casing 170 also comprises a motor 171 with speed coupling gear 172 for driving an air compressor of either impeller or piston type, indicated at 173, through a noise silencing flexible coupling 174. The air intake is through a filter 175 and muffler or silencer 176 from which it is to be drawn by compressor 173 and forced into heat exchanger 177 which is located in a separate compartment 178 partitioned from the compressor 173 by a wall thereof.

Air is conveyed from the heat exchanger 177 to the filter container 150 by pipe 153. The heat exchanger 177 is enclosed in compartment 178, closed on one side by louvres or flaps 179 which may be opened to a variable extent to establish a variable degree of air circulation, thus permitting evacuation of heat from the enclosure. However, when the massage unit is in continuous use, it is preferred to circulate the compressor cooling air by means of variable speed electric fan 180. The electric fan 180, may be controlled from the control panel or from any convenient point.

The means for cooling the massage air at the outlet of the compressor 173 are not limited to a circulation of air. A cooling system using water as a medium for heat exchange or a refrigerating system may be substituted for or combined with the air fan, if needed, in warm locations or for tonic treatments requiring a larger temperature drop.

The diagrams of FIGURES 22 and 23 represent the results of extended experimentation and massage operation with living subjects, utilizing pulsating air as described above. In diagram No. 1 the area to the left of the line B—B represents applicant's initial work in the field, following the lead of the prior art, and utilizing high pressure air at limited volumes. This area failed to provide useful satisfactory results and could not be effectively used in practise. As noted above the best that could be obtained was depression of the skin in limited places without any useful massage action. This area was abandoned.

When work was done in the high-volume low-pressure zones, below and to the right of line A—A of FIGURE 22, Diagram No. 1, new and useful results were obtained which provided useful massage action comparable to that of the professional masseur. The area providing optimum results was found to lie between volumes of forty to eighty cubic feet of air per minute at pressures between sixteen and twenty-five pounds per square inch. The area of Diagram No. 1 under line A—A is the area of "predominant volumes" in which the flow volume in cubic feet per minute is a relatively more important factor numerically than the pressure in pounds per square inch. That is to say, I have achieved on the whole better results with higher volumes and lower pressures for many applications even within the area under line A—A. The actual values in the area under the line A—A which are to be employed in any particular treatment depend upon the subject's condition and the end in view. In severe cases treatments are carried out under the direction of the subject's physician.



Diagram No. 2 shows the relation between the air volumes in cubic feet per minute, the horsepower required and the percentage of useful applications and favorable results among all the patients that require hand massage and exercising treatments. These data are taken from my practice.

The high pressure at low volumes of air delivery left of a line C—C have given far too few results to be considered at all practical. In the area between lines C—C and D—D, high pressure with increased flow is very uneconomical and is irregular in results.

Before one can obtain a resonant beat in a flesh area, pressure has to be drastically reduced and air flow increased in a considerable manner.

In the neighborhood of line D—D, by experience and observation from the various cases, one can establish a curve starting from point L which shows the progression in the usefulness of my massaging method, as the air of low pressure increases in volume and effectiveness.

The area between C—C and D—D is the area in which high air pressure and high air volumes are incompatible, thus establishing a discontinuity in the effects observed in previous attempts made at the left of line C—C with compressed air and those observed on the right of line D—D with a high volume blower creating a low pressure blast of air.

The attached two diagrams make amply clear what my findings have been; and the link that exists between the successful treatments and the high-volume low-pressure air flow and power required to be applied to the human body in order to achieve successful results, without any pain or harm to said body.

As the ratio of volume to pressure of air flow is increased, particularly for the low pressures, conditions approaching those observed in nature are found to occur. For example, beneficial treatment for hair may be obtained as the volume is increased above sixty cubic feet per minute while the pressure is held to sixteen pounds per square inch or less.

While there have been described above what are presently believed to be the preferred forms of the invention, variations thereof will be obvious to those skilled in the art and all such changes and variations which fall within the spirit of the invention are intended to be covered by the generic terms in the appended claims, which are variably worded to that end.

I claim:

1. The method of massaging a human body with air, comprising the steps of compressing air in high volumes at low pressures for effective air massage by the production of deep traveling ridges in the skin and flesh of a human body being massaged, applying the air in high volumes at low pressures at an acute angle to the surface of a human body being massaged, controlling the volume, pressure and angle of air flow upon the body surface within value limits which produce deep traveling ridges in the skin and flesh of the body being massaged and which leave the skin and flesh of said body free from bruises and contusions which might otherwise occur during massage from the impact of air flow.

2. The combination set forth in claim 1, the step of modulating the high-volume low-pressure air flow sufficiently to permit the natural resilience of the skin and flesh constituting said deep traveling ridges to begin to return to their normal position on the body being massaged.

3. The combination set forth in claim 2, in which the step of modulating the air flow is carried substantially to cut-off to form pulses comprising substantially discrete masses of air spaced from each other in a pulse train.

4. The combination set forth in claim 3, in which the pulses resulting from modulation have a controlled frequency related to the natural period of resonance of the skin and flesh constituting the deep ridges formed therein whereby to maximize the ridge forming effect of the air pulses.

5. The combination set forth in claim 4, the steps of opposing the propagation of said deep traveling ridges to produce the equivalent of standing waves in the skin and flesh of a body being massaged with high-volume low-pressure air, causing the standing waves so produced in a given area of the body being massaged to die down and repeatedly building up the said standing waves in said given area.

6. The combination set forth in claim 2, the steps of moving the area of impact of the high-volume low-pressure air flow slowly over the surface of said body.

7. The combination set forth in claim 2, the steps of cooling the high-volume low-pressure air prior to application thereof to said body.

8. The combination set forth in claim 7, the step of filtering the air used to produce the said deep ridges to remove oil and other foreign particles which may be present therein.

9. The combination set forth in claim 2, the steps of controlling the high-volume low-pressure air flow within the volume flow range of forty to eighty cubic feet per minute and within the pressure range of sixteen and twenty-five pounds per square inch.

10. The combination set forth in claim 9, the step of selecting related values of volume and pressure within said ranges in accordance with the physiological condition of the skin and flesh of the body to be treated with particular attention to varicose veins and traumatisms where present.

11. The combination set forth in claim 2, the step of modulating the air flow to produce a train of pulses of air, having a pulse frequency falling within the frequency range of eight to twenty cycles per second.

12. The combination set forth in claim 1, the steps of modulating said high-volume low-pressure air flow and applying the modulated air stream to a body being massaged so that the area of impact of the stream approximates the area of a masseur's hand, leaving the body being massaged completely free from all bruises and contusions which might otherwise occur due to impact of the air flow.

13. The method set forth in claim 1, the step of producing effectively deep standing waves respectively by applying a plurality of high-volume low-pressure air streams at an angle to each other.

14. The method set forth in claim 13 in which each said air stream has a large vector component directly opposed to the other stream at 180 degrees.

15. A method of massaging a human body with air, comprising the steps of compressing air in high volumes at low pressures for effective air massage by the production of deep ridges in the skin and flesh of a human body being massaged, applying air in high volumes at low pressures at an acute angle to the surface of a human body being massaged, controlling the volume, pressure and angle of air flow upon the body surface within value limits which produce deep ridges in the skin and flesh of the body being massaged, the respective values being such that the volume of air flow in cubic feet per minute exceeds the air pressure in pounds per square inch at the area of application to the body being massaged.

16. The method set forth in claim 15, the step of controlling the air flow to maintain the volume within the range of forty to sixty cubic feet per minute.

17. The method set forth in claim 15, the step of controlling the air flow to maintain the air pressure within the range of fifteen to twenty-five pounds per square inch.

18. The method set forth in claim 15, the step of controlling the air flow to maintain the volume within the range of forty to sixty cubic feet per minute and the air pressure within the range of fifteen to twenty-five pounds per square inch.

19. The method set forth in claim 15, the step of controlling the air flow to maintain the volume above sixty cubic feet per minute and the air pressure no greater than sixteen pounds per square inch.

20. A method of massaging the body in a horizontal relaxed position, comprising extended said body on a substantially horizontal support, causing a flow of pulsating compressed air to be directed onto the tissues of said body at a small angle of incidence, causing said tissues to move lengthwise back and forth in deep travelling ridges under the effect of said flow of pulsating compressed air and blocking the movement of the tissues by means of an action exerted on the tissues in movement in the opposite direction to the direction in which said flow of compressed air is directed.

21. A method of massaging the body in a horizontal relaxed position, comprising extending said body on a substantially horizontal support, causing a flow of pulsating compressed air to be directed onto the tissues of said body at a small angle of incidence, causing said tissues to move lengthwise back and forth in deep travelling ridges under the effect of said flow of pulsating compressed air, and blocking the movement of the tissues by means of a second flow of air caused to be directed on the tissues in movement in the opposite direction to that in which the first-mentioned flow of air acts.

22. A method of massaging the body in a horizontal relaxed position, comprising extending said body on a substantially horizontal support, causing a flow of pulsating compressed air to be directed onto the tissues of said body at a small angle of incidence, causing said tissues to move lengthwise back and forth in deep travelling ridges under the effect of said flow of pulsating compressed air, and blocking the movement of the tissues by means of a second flow of pulsating air caused to be directed onto the tissues in movement in the opposite direction to that in which the first-mentioned flow of air acts.

23. Equipment for massaging with pulsating compressed air, comprising a table support having a table adapted to support the body to be massaged in a substantially horizontal relaxed position, means supplying compressed air at constant pressure; a pipe communicating at one end with said supply means and at its other end with a pulsator-blower unit; said unit comprising a pulsating device having a wall which is provided with at least one aperture and separates two chambers, one of said chambers communicating with said supply means and the other of said chambers communicating with the blower nozzle, a perforated disc rotatably mounted on said wall for successively closing and opening said aperture; said equipment further comprising an articulated arms arrangement, one arm of said arrangement supporting at one of its ends said pulsator-blower unit and at its other end a driving motor also constituting a counterweight balancing the weight of said unit, and a flexible shaft connecting the motor to said perforated disc.

24. Equipment for massaging with pulsating compressed air, comprising a table support having a table adapted to support the body to be massaged in a substantially horizontal relaxed position, means supplying compressed air at constant pressure, a blower nozzle, an air circuit connecting the blower nozzle to said supply means, and a pulsating device inserted in said circuit, said pulsating device comprising a wall which is provided with a plurality of apertures and separates two chambers, one of said chambers communicating with said supply means and the other of said chambers communicating with the blower nozzle, a perforated disc rotatably mounted on said wall for successively closing and opening said apertures, means for driving said rotatable perforated disc in rotation, and regulating means for vary-

ing the frequency of the pulsations, said regulating means comprising a perforated regulating disc forming a register placed against said wall, relative to which it is capable of occupying a plurality of positions, and permitting, in combination with said apertures in said wall, defining a plurality of sets of effective passageways through said wall and said regulating disc which cooperate with said rotatable perforated disc.

25. Equipment for massaging with pulsating compressed air at a rate from 40 to 80 cu. feet per minute, comprising a table support having a table adapted to support the body to be massaged in a substantially horizontal relaxed position, means supplying compressed air at constant low pressure from 16 to about 25 lbs. per sq. in., a pipe communicating at one end with said supply means and at its other end with a pulsator-blower unit, said pulsator-blower unit comprising a connection adapted to be connected to said air supply means, a first chamber



communicating with said connection, two passageways whose cross-sectional areas are different putting said chamber in communication with a second chamber, a turbine whose blades are disposed transversely of said passageways so as to be subjected to the air flowing through said passageways, means for closing at will a variable part of the cross-section of that of said passageways whose cross-sectional area is the smaller; and a blower nozzle supplied with air by said second chamber.

**References Cited** in the file of this patent

UNITED STATES PATENTS

| | | |
|---|---|---|
| 2,717,604 | Mastaller | Sept. 13, 1955 |
| 3,058,461 | Courtin | Oct. 16, 1962 |

FOREIGN PATENTS

| | | |
|---|---|---|
| 538,854 | Germany | Nov. 19, 1931 |