US 20200208697A1

(19) **United States**

(12) **Patent Application Publication** (10) **Pub. No.: US 2020/0208697 A1**

Boffelli (43) **Pub. Date: Jul. 2, 2020**

(54) **VENTILATED BRAKE DISC**

(71) Applicant: **Westinghouse Air Brake Technologies Corporation**, Wilmerding, PA (US)

(72) Inventor: **Roberto Boffelli**, Camisano (IT)

(21) Appl. No.: **16/815,654**

(22) Filed: **Mar. 11, 2020**

Related U.S. Application Data

(63) Continuation of application No. 15/375,317, filed on Dec. 12, 2016, now Pat. No. 10,619,689.

Publication Classification

(51) **Int. Cl.**
F16D 65/12 (2006.01)

(52) **U.S. Cl.**
CPC ***F16D 65/128*** (2013.01); *F16D 2065/1392* (2013.01)

(57) **ABSTRACT**

A friction ring configured to be fixed to a hub at one or more fixation points is provided. The friction ring includes a ring shaped body; an outer surface configured to be contacted by a brake mechanism; an inner surface configured to contact a portion of a hub or axle to impart a braking force thereto; at least one through-hole for receiving a fastener for fixing the friction ring to the hub or axle; and at least two protrusions extending from the inner surface of the friction ring forming a channel. A cross-sectional area of an inflow portion of the channel is smaller than a cross-sectional area of an outflow portion of the channel. A brake assembly including a hub and the fixation ring is also provided.

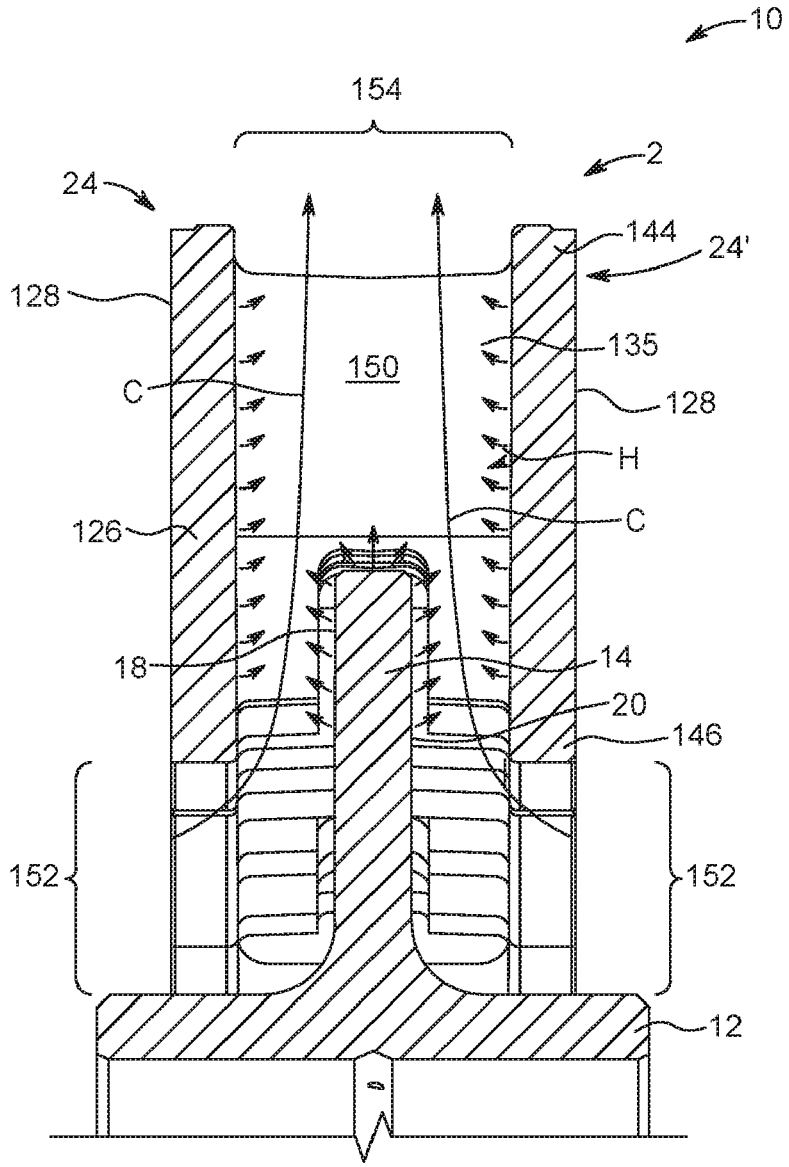

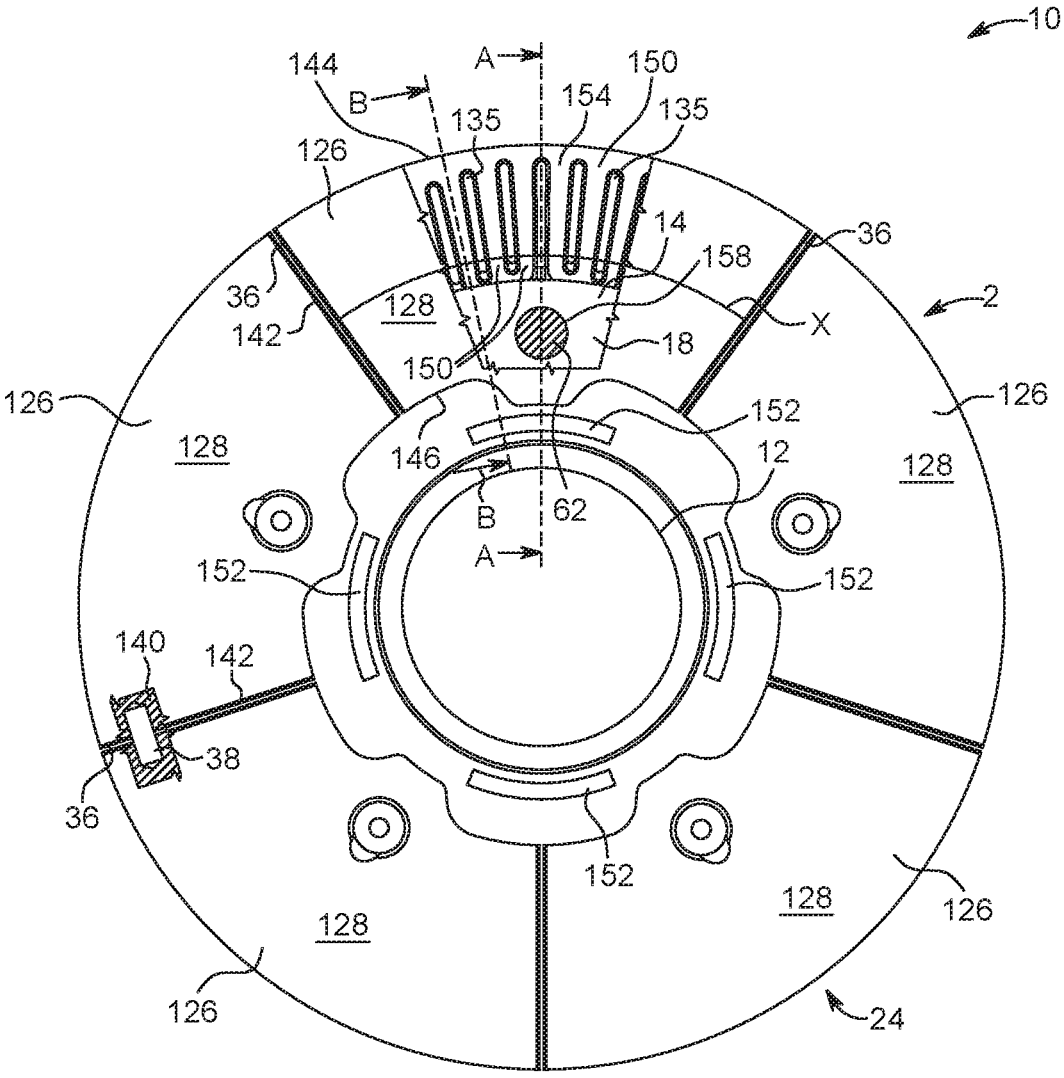
10
144
A
150
B
154
135
135
126
14
36
158
36
128
2
142
X
18
150
126
126
152
128
146
12
128
B
62
A
152
152
140
142
38
36
152
128
128
126
126
24

FIG. 1

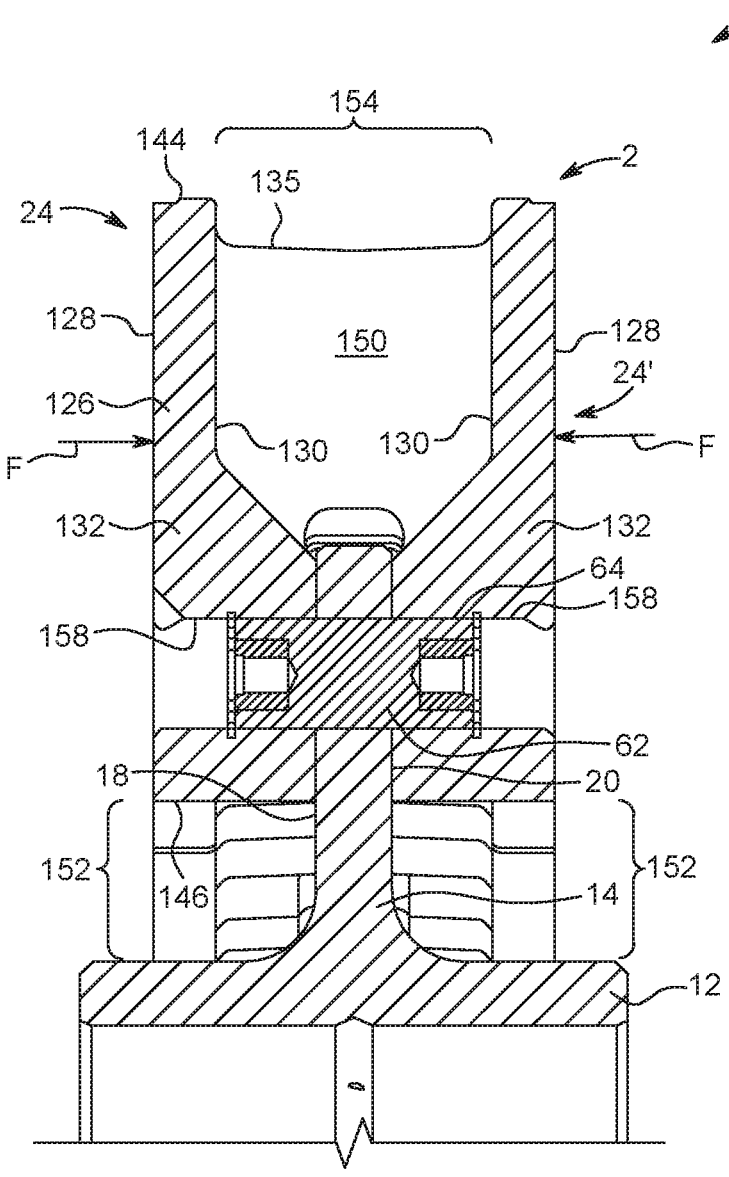
10
154
144
2
135
24
128
150
128
24'
126
130
130
F
F
132
132
64
158
158
62
18
20
152
146
14
152
12

FIG. 2

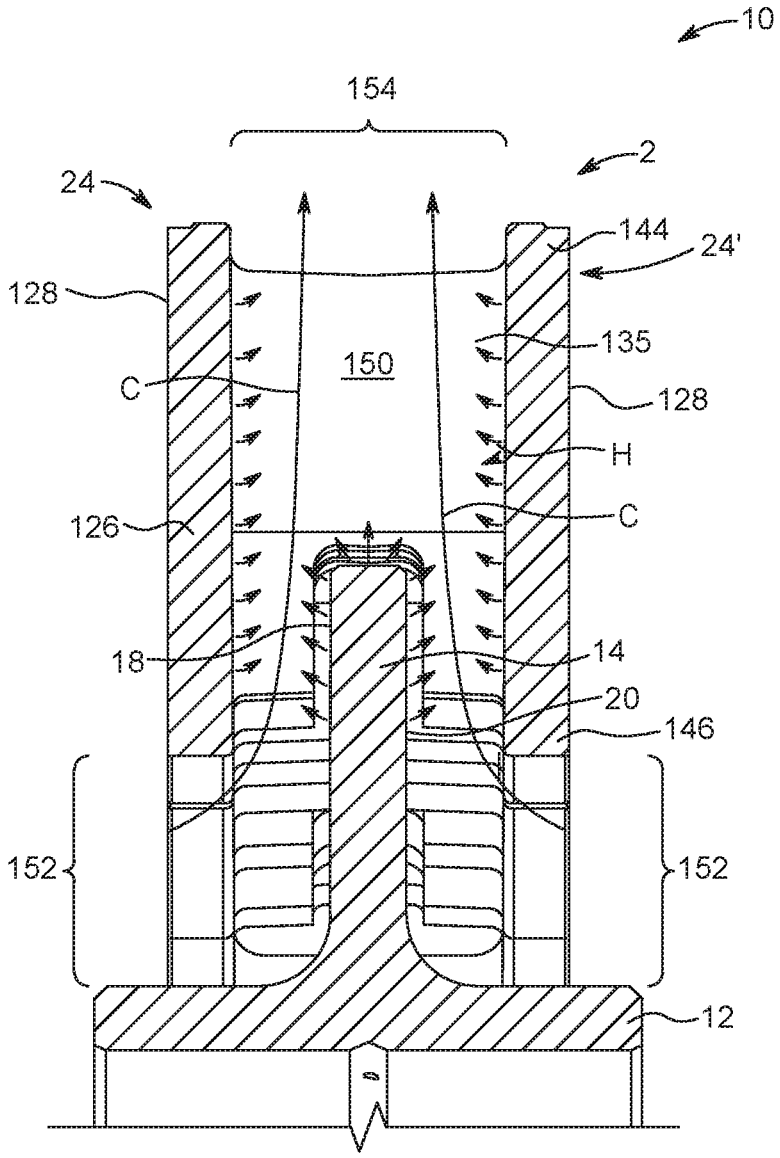

FIG. 3

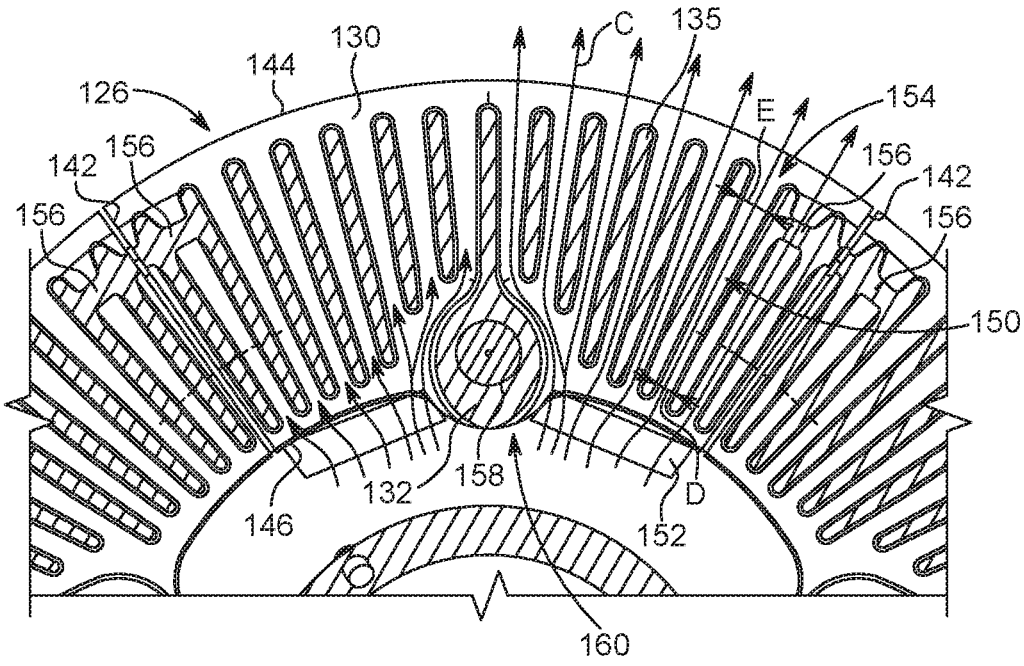
126
144
130
C
135
E
154
156
142
156
142
156
156
150
132
158
146
152
D
160

FIG. 4

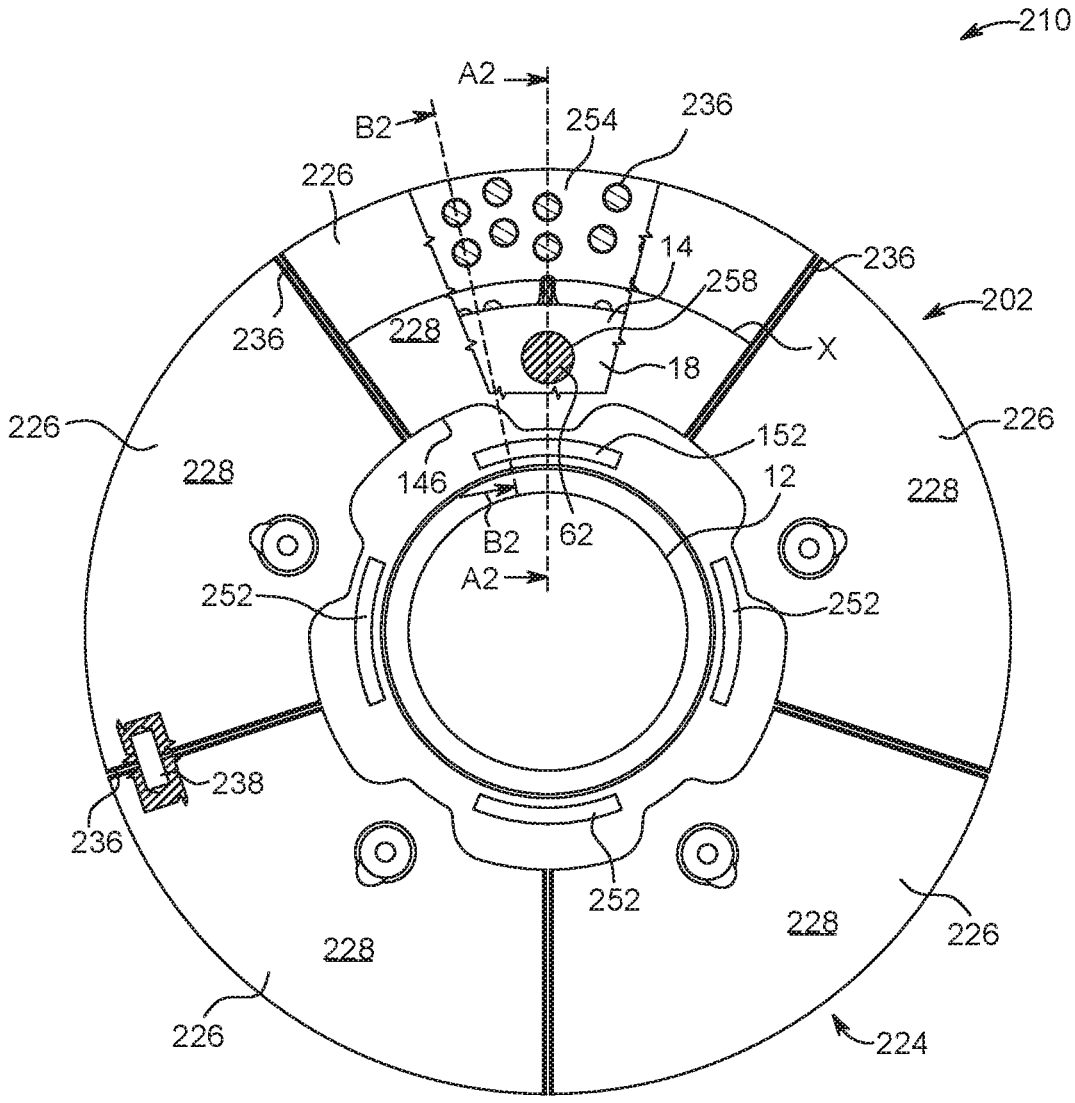
210
A2
B2
254
236
226
14
236
258
202
236
228
X
18
226
226
152
228
146
12
228
B2
62
A2
252
252
238
236
252
228
228
226
226
224

FIG. 5

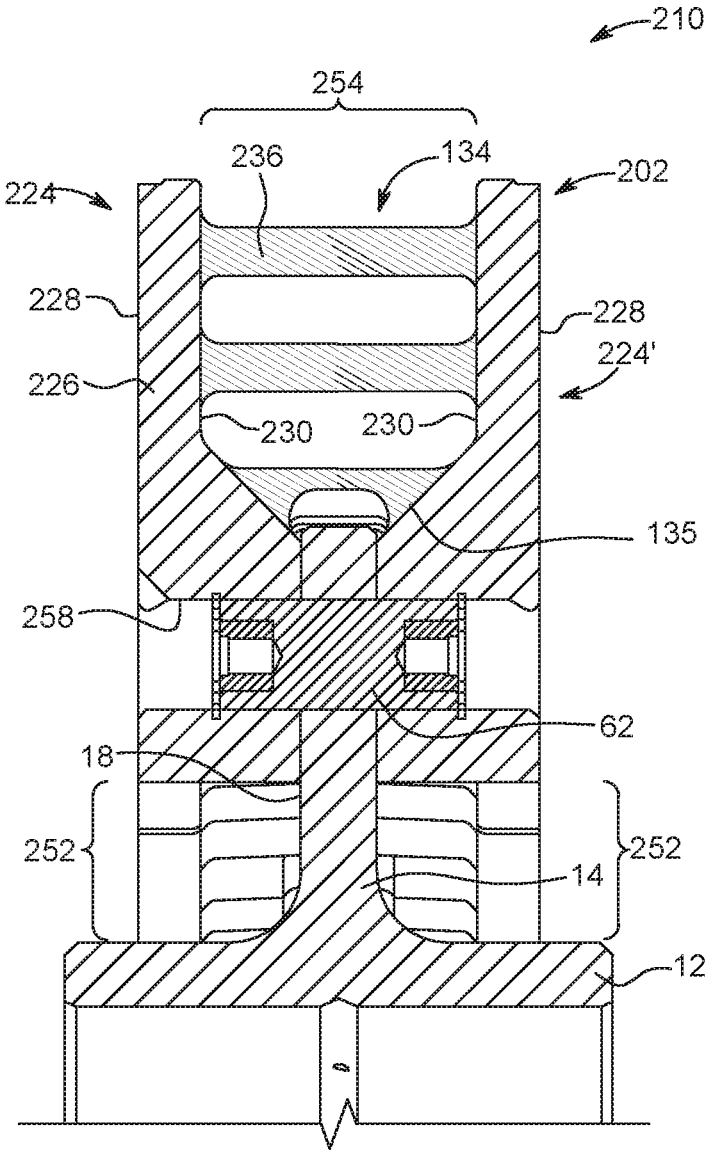
210
254
236
134
202
224
228
228
224'
226
230
230
135
258
62
18
252
252
14
12

FIG. 6

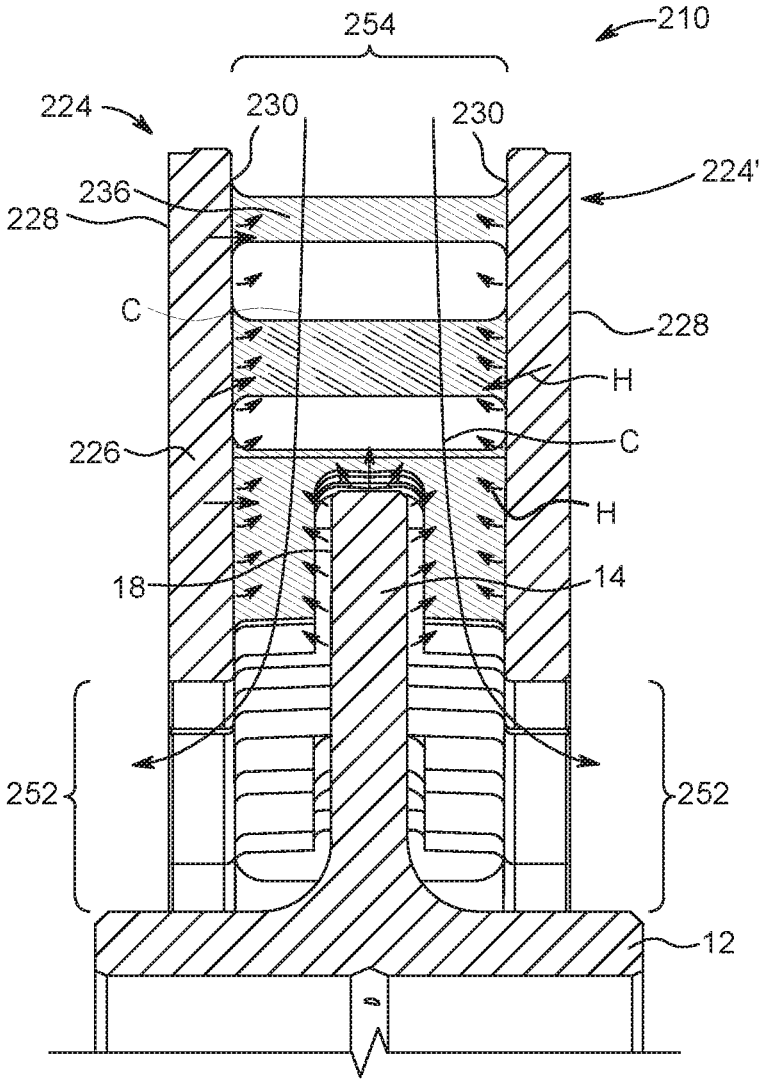

FIG. 7

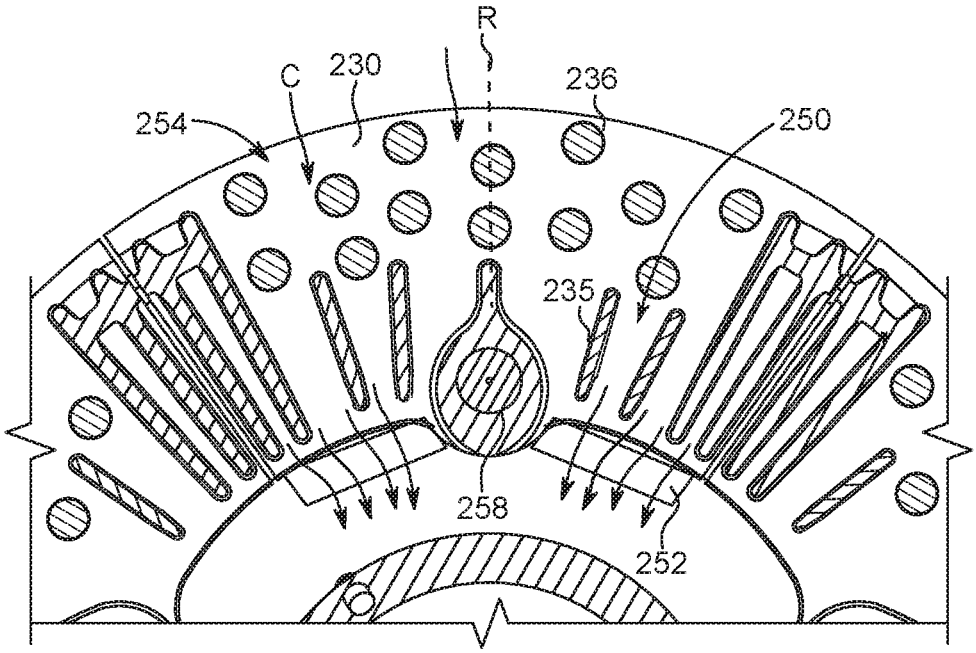

FIG. 8

VENTILATED BRAKE DISC

CROSS-REFERENCE TO RELATED APPLICATIONS

[0001] This application is a continuation of U.S. patent application Ser. No. 15/375,317, which was filed on 12 Dec. 2016, and the entire disclosure of which is incorporated herein by reference.

BACKGROUND

Technical Field

[0002] The subject matter described herein relates to a brake disc for a rotating body, such as a wheel, and, more specifically, to an annular brake disc with a ventilating structure for directing airflow across at least a portion of the disc to transfer heat therefrom.

[0003] Discussion of Art.

[0004] Brake discs are affixed to wheels or rotors for the purpose of providing a smooth, hard contact surface that can be contacted by a brake shoe or pad controlled by a brake mechanism, such as a brake jaw. When contact between the disc and shoe or pad is established, friction between the elements is sufficient to slow or stop rotation of the wheel. Disc brakes are commonly used in a variety of applications including, for example, industrial machines, such as cranes and lifts, as well as in conveying installations, such as escalators, elevators, ski-lifts, and the like. Disc brake assemblies are also employed in transport vehicles, such as rail cars, public transportation vehicles, trucks, and automobiles.

[0005] It is well known that significant heat is created as a result of the frictional contact between the brake shoe and brake disc. The heat may cause thermal expansion of portions of the brake assembly and may cause the brake assembly to deform or degrade following prolonged use. More particularly, known braking apparatus often do not permit uniform distribution of the generated heat leading to wide temperature gradients across the braking assembly. Such temperature gradients may cause fissures and cracks to form in the brake disc. Additionally, cooling airflow is often neither sufficiently uniform nor adequate to counteract the destructive effects of the heat being generated. Instead, cooling air may actually increase temperature gradients on the brake disc worsening thermal transitional phenomena. Additionally, a considerable amount of the heat created on the contact surface of the brake element is transferred to the shaft on which the brake disc is mounted. This transferred heat may cause oxidation to occur on the shaft and/or wheel making replacing brake elements more difficult. Prolonged heat exposure also alters the centering or calibration of the brake elements and/or drive members further affecting performance of the brake system and wheel.

[0006] U.S. Pat. No. 4,132,294 to Poli, entitled "Braking disc with replaceable linings, for brake-discs" ("the '294 patent"), which is incorporated by reference herein, discloses an annular brake disc including radial fins or gills for directing airflow between front and rear brake discs of a brake assembly. The front and rear brake discs include openings on the disc surface located near the central portion of the wheel or wheel hub. Air is drawn into the openings and directed radially outward along the inner surface of the brake discs by the fins or gills. Heat created by the brake disc is transferred to the fins or gills and ventilated by the airflow. In this way, the fins or gills remove heat from the brake disc and wheel to improve performance thereof.

[0007] Thermal expansion and degradation of a brake assembly is also addressed by the shape of the disc itself. More specifically, to make the brake linings and/or brake discs more accessible and to simplify maintenance, brake discs have been developed that are formed from two or more interlocking segments or friction rings, which can be individually removed and replaced. For example, the '294 patent discloses a disc brake including two or more linings disposed about a central hub.

[0008] Other segmented disc brakes are known in which individual segments are spaced apart by a gap to permit the segments to expand when exposed to heat. For example, U.S. Pat. No. 5,788,026 to Poli, entitled "Brake disc assembly for a rotational body", which is incorporated herein by reference, discloses a disc brake having a number of brake disc segments affixed to a rotating body to form an annular ring. Corresponding segments of the disc brake are attached to one another by fasteners extending through-holes in the segments and rotating body. The segments are also slidably connected to adjacent segments in the annular disc brake by joining elements or pins extending from a socket of a segment to a corresponding socket of the adjacent segment. In this way, the segments may move and expand in response to heat, friction, and pressure caused by contact between the disc brake and brake mechanism.

[0009] However, a need exists for a brake disc with improved cooling and ventilating structures. Particularly, airflow volume and speed across the disc should be maximized to increase the cooling effect. Furthermore, the airflow pattern should be improved so that airflow is made available to portions of the disc that are most likely to be exposed to substantial heat. The brake disc disclosed herein is designed for such optimized and improved airflow.

BRIEF DESCRIPTION

[0010] In view of the foregoing, the brake assembly of the inventive subject matter provides a friction ring or brake disc that connects to a wheel, rotor, or hub and ventilates heat from the brake disc by directing airflow radially outward along an inner surface of the disc. The structure of the brake disc, including radial protrusions or fins and placement of through-holes and fasteners, is designed to maximize ventilation through the disc. Particularly, through specific placement of the through-hole and fin structures, airflow between the disc and hub is effectively maximized. As a result of such airflow, damage from thermal stress and thermal expansion of the disc is effectively reduced. Accordingly, the brake disc assembly is less susceptible to wear-based damage and operates more quietly than known alternative systems.

[0011] Generally, the subject matter described herein is directed to a brake assembly configured to be connected to a hub or axle of a rotating body. Advantageously, the assembly addresses or overcomes some or all of the deficiencies and drawbacks associated with existing braking systems.

[0012] According to an aspect of the inventive subject matter, a friction ring includes a ring shaped body; an outer surface configured to be contacted by a brake mechanism; an inner surface configured to contact a portion of a hub or axle to impart a braking force thereto; at least one through-hole

for receiving a fastener for fixing the friction ring to the hub or axle; and at least two protrusions extending from the inner surface of the friction ring forming a channel. A cross-sectional area of an inflow portion of the channel is smaller than a cross-sectional area of an outflow portion of the channel.

[0013] According to another aspect of the inventive subject matter, a brake assembly includes a brake disc comprising one or more segments arranged to form a front friction ring and a rear friction ring. The friction rings are configured to contact a braking mechanism. The assembly also includes a hub configured to be connected to an axle, the hub comprising a central rotor and a radially extending flange encircling at least a portion of the central rotor. The assembly also includes a pin fixed to and extending through the flange for fixing the brake disc to the flange. Each segment comprises: a body having an outer surface configured to be contacted by a brake mechanism and an inner surface configured to contact a portion of the hub or the axle to impart a braking force thereto; a through-hole extending through the body for receiving the pin for connecting the segment to the hub or the axle; and at least two protrusions extending from the inner surface forming a channel. A cross-sectional area of an inflow portion of the channel is smaller than a cross-sectional area of an outflow portion of the channel.

[0014] According to another aspect of the inventive subject matter, a brake disc configured to be fixed to a hub and/or axle at one or more fixation points includes one or more segments arranged to form a front friction ring and a rear friction ring. Each of the one or more segments comprises: a body having an outer surface configured to be contacted by a brake mechanism and an inner surface configured to contact a portion of the hub or the axle to impart a braking force thereto; a through-hole extending through the body for receiving the pin for connecting the segment to the hub or the axle; and at least two protrusions extending from the inner surface forming a channel. A cross-sectional area of an inflow portion of the channel is smaller than a cross-sectional area of an outflow portion of the channel.

[0015] A friction ring can include: a ring shaped body; an outer surface configured to be contacted by a brake mechanism; an inner surface configured to contact a portion of a hub or axle to impart a braking force thereto; at least one through-hole for receiving a fastener for fixing the friction ring to the hub or axle; and at least two protrusions extending from the inner surface of the friction ring forming a channel, where a cross-sectional area of an inflow portion of the channel is smaller than a cross-sectional area of an outflow portion of the channel.

[0016] The channel can extend between a circumferential inner edge and a circumferential outer edge of the friction ring and is positioned to direct airflow across the inner surface thereof. The inflow portion of the channel can be disposed radially inward from the outflow portion of the channel, such that the airflow is directed from an inner circumferential edge to an outer circumferential edge of the friction ring. The at least one through-hole can be disposed radially inwardly from a radially inner end of each of the protrusions. The friction ring can be configured to be fixed to the hub or the axle with a number of fixation points to maximize an air inlet area thereby maximizing an air flux across the inner surface of the friction ring.

[0017] The protrusions can comprise radially extending fins. The radially extending fins can be tapered in the radial direction, such that a radially inner portion thereof is narrower than a radially outer portion thereof, and in a transverse direction, such that portions of the fins adjacent to the inner surfaces are wider than central portions of the fins. The radially extending fins can define a central longitudinal axis that is offset from the radius of the segment by at least 5 degrees.

[0018] The friction ring also can include at least one transverse rib extending between adjacent radially extending fins, thereby defining a curving airflow path.

[0019] The at least one through-hole can be positioned radially inward from the transverse ribs.

[0020] The at least two protrusions can be positioned such that a single radius of the friction ring passes through both of the protrusions.

[0021] A brake assembly can include: a brake disc comprising one or more segments arranged to form a front friction ring and a rear friction ring, the friction rings being configured to contact a braking mechanism; a hub configured to be connected to an axle, the hub comprising a central rotor and a radially extending flange encircling at least a portion of the central rotor; and a pin fixed to and extending through the flange for fixing the brake disc to the flange, where each segment comprises: a body having an outer surface configured to be contacted by a brake mechanism and an inner surface configured to contact a portion of the hub or the axle to impart a braking force thereto; a through-hole extending through the body for receiving the pin for connecting the segment to the hub or the axle; and at least two protrusions extending from the inner surface forming a channel, where a cross-sectional area of an inflow portion of the channel is smaller than a cross-sectional area of an outflow portion of the channel.

[0022] The channel can extend between a circumferential inner edge and a circumferential outer edge of the inner surface of the segment body, the channel being positioned to direct airflow across the inner surface of the segment body. Each of the one or more segments can include a single through-hole, such that each of the one or more segments is fixed to the hub at a single fixation point. When fixed to the flange, each segment can be rotatable about the single fixation point.

[0023] Each of the one or more segments can be fixed to the hub with a number of fixation points to maximize an air inlet area thereby maximizing an air flux across the inner surface of each segment body. The hub can include at least one inflow port positioned to direct cooling air to the channel. The inflow port can include at least one circumferential slot extending about a portion of the rotor.

[0024] The protrusions can include a radially extending fin, and can further include one or more transverse ribs extending between adjacent radially extending fins. The transverse ribs can be positioned to define a curving airflow path. The at least two protrusions can be positioned such that a radius of the segment passes through each of the at least two protrusions.

[0025] A brake disc can be configured to be fixed to a hub and/or axle at one or more fixation points. The brake disc can include one or more segments arranged to form a front friction ring and a rear friction ring, where each of the one or more segments comprises: a body having an outer surface configured to be contacted by a brake mechanism and an

inner surface configured to contact a portion of the hub or the axle to impart a braking force thereto; a through-hole extending through the body for receiving the pin for connecting the segment to the hub or the axle; and at least two protrusions extending from the inner surface forming a channel, where a cross-sectional area of an inflow portion of the channel is smaller than a cross-sectional area of an outflow portion of the channel.

[0026] The channel can extend between a circumferential inner edge and a circumferential outer edge of the friction ring and be positioned to direct airflow across the inner surface thereof. Each segment can include a single through-hole, such that each segment is fixed to the hub and/or axle at a single fixation point. When fixed to the hub and/or axle, each segment can be rotatable about the single fixation point.

[0027] Each of the one or more segments can be fixed to the hub with a minimum number of fixation points to maximize an air inlet area thereby maximizing an air flux across the inner surface of each segment body.

[0028] The foregoing and other features and characteristics, as well as the methods of operation and functions of the related elements of structures and the combination of parts and economies of manufacture, will become more apparent upon consideration of the following description and the appended claims with reference to the accompanying drawings, all of which form a part of this specification, where like reference numerals designate corresponding parts in the various figures. It is to be expressly understood, however, that the drawings are for the purpose of illustration and description only and are not intended as a definition of the limits of the inventive subject matter. As used in the specification and the claims, the singular form of "a", "an", and "the" include plural referents unless the context clearly dictates otherwise.

BRIEF DESCRIPTION OF THE DRAWINGS

[0029] Some of the features of the inventive subject matter have been summarized hereinabove. These embodiments, along with other potential embodiments of the device, will become apparent to those of ordinary skill in the art when referencing the following drawings in conjunction with the detailed descriptions as they relate to the figures.

[0030] FIG. **1** is a front view of a brake disc assembly according to an embodiment of the inventive subject matter;

[0031] FIG. **2** is a cross-sectional view of a portion of the assembly of FIG. **1** along line A-A in FIG. **1**;

[0032] FIG. **3** is a cross-sectional view of a portion of the assembly of FIG. **1** along line B-B in FIG. **1**;

[0033] FIG. **4** is a cross-sectional view of a portion of the assembly of FIG. **1** taken along a plane parallel to the face of the brake disc segment;

[0034] FIG. **5** is a front view of another example brake disc assembly according to an embodiment of the inventive subject matter;

[0035] FIG. **6** is a cross-sectional view of a portion of the assembly of FIG. **5** along line A**2**-A**2** in FIG. **5**;

[0036] FIG. **7** is a cross-sectional view of a portion of the assembly of FIG. **5** along line B**2**-B**2** in FIG. **5**; and

[0037] FIG. **8** is a cross-sectional view of a portion of the assembly of FIG. **1** taken along a plane parallel to the face of the brake disc segment.

DETAILED DESCRIPTION

[0038] The following description is provided to enable those of ordinary skill in the art to make and use the described embodiments contemplated for carrying out the inventive subject matter. Various modifications, equivalents, variations, and alternatives, however, will remain readily apparent to those of ordinary skill in the art. Any and all such modifications, variations, equivalents, and alternatives are intended to fall within the spirit and scope of the inventive subject matter. It is also to be understood that the specific devices illustrated in the attached drawings, and described in the following specification, are simply example embodiments of the inventive subject matter. Hence, specific dimensions and other physical characteristics related to the embodiments disclosed herein are not to be considered as limiting. For the purpose of facilitating understanding of the inventive subject matter, the accompanying drawings and description illustrate preferred embodiments thereof, from which the inventive subject matter, various embodiments of its structures, construction and method of operation, and many advantages may be understood and appreciated.

[0039] For purposes of the description hereinafter, the terms "end", "upper", "lower", "right", "left", "vertical", "horizontal", "top", "bottom", "lateral", "longitudinal", and derivatives thereof shall relate to the inventive subject matter as it is oriented in the drawing figures.

[0040] One or more embodiments of the inventive subject matter are directed to a friction ring or brake disc for a rotating body or wheel structure, such as a railway vehicle wheel. The friction ring or brake disc may be a unitary structure (e.g., a monobloc disc) or segmented, as illustrated in the accompanying figures. The brake disc may be used to restrict rotation of railway vehicle wheels and, specifically, for low speed rail vehicles having a speed of less than 200 km/hr. A brake disc refers to a structure adapted to connect to a rotating body and configured to be contacted by a braking mechanism, such as a brake jaw, brake pad, or brake shoe. Friction between the brake disc and shoe slows or stops rotation of the rotating body. Brake discs are generally either hub mounted or wheel mounted. Hub mounted brake discs (also referred to as an axle mounted disc) are connected to the hub or axle of the rotating body. In contrast, wheel mounted brake discs are connected directly to a surface of the wheel itself rather than to the hub or axle.

[0041] In some examples, the brake disc is configured to be fixed to the hub with the minimum number of fixation points allowed by safety calculations. Safety calculations can include computer modeling techniques for modeling forces exerted on the disc during use. Determining the minimum number of fixation points can consider, for example, the number of fixation points needed to form a stable and sufficiently strong connection between the brake disc and hub to ensure sufficient stopping power during use. In the case of a segmented brake disc, each segment may be mounted to the hub at a single fixation point. The segment may be permitted to rotate about the single fixation point. Mounting the segment and/or disc to the hub at a minimum number of fixation points allows for creation of a disc with a maximized air inlet area, thereby providing maximum air flux across an inner surface of the brake disc and a highest possible ventilation.

[0042] With reference to FIGS. **1** to **3**, a hub mounted brake disc assembly **10** is illustrated; however, it is understood that the assembly **10** could also be adapted to mount

directly to a wheel body within the scope of the inventive subject matter. The assembly **10** includes a hub **12** with a radial flange **14** extending therefrom. The hub **12** may be configured to receive a rotating body, such as an axle of a railway vehicle or similar rotating structure. The flange **14** includes a front side surface **18** and a rear side surface **20** (shown in FIGS. **2** and **3**). The flange **14** may be the same thickness throughout or may include regions having a different thicknesses or rigidity. For example, the flange **14** may include alternating concentric bands (not shown) having high and low rigidity. The rigidity of the various regions may result from varying either the thickness or material composition of the flange **14**.

[0043] The assembly **10** further comprises a friction ring or brake disc **2** having a front side **24** connected to the front side surface **18** of the flange **14** and a rear side **24'** (shown in FIGS. **2** and **3**) connected to the rear side surface **20**. Generally, it is preferable to affix the sides **24**, **24'** of the brake disc **2** to a more rigid region of the flange **14** to improve braking performance. In the following discussion, the structure of the front side **24** is described. The rear side **24'** has a similar or identical structure as the front side **24** and, therefore, includes the features described hereinafter.

[0044] With specific reference to FIG. **1**, the brake disc **2** is a segmented disc formed from a plurality of segments **126**. For example, the disc **2** can be formed from five substantially identically shaped segments. While a segmented brake disc **2** is described and illustrated herein, it is understood that the brake disc may also be a ring-shaped monobloc structure within the scope of the inventive subject matter. As shown in FIG. **1**, the segments **126** may be connected around the hub **12** to form a closed annular ring. The closed ring may be referred to as a friction ring. While the segments **126** illustrated in FIG. **1** are the same size and shape, it is understood that the brake disc **2** may include segments having different shapes and sizes. The total number of segments may be even or odd.

[0045] The segments **126** may be separated from one another by a radial gap **36** between the radial ends **142** of adjacent segments **126** so that the segments **126** can freely expand or contract depending on the temperature and force applied by the brake shoe or pad. The segments **126** are connected together by joining elements **38** extending across the gap **36**. In the embodiment of the disc assembly **10** shown in FIG. **1**, each segment **126** is connected to the adjacent segment **126** by one joining element **38** located near the outer circumferential side **144** of the segment **126**. In certain embodiments, the brake disc **24** may include multiple joining elements **38** between each segment **126**. For example, the assembly **10** could include two joining elements **38** between each segment **126**. The joining elements **38** may be positioned at equidistant positions from the central axis X of the segment **126**. The joining element **38** may be a pin, fastener, or slider as is known in the art. The joining elements **38** are configured to be inserted in a socket **140** extending inward from the radial end **142** of each segment **126**, such that each joining element **38** extends between corresponding sockets **140** of adjacent segments **126**. In one embodiment, the depth of each socket **140** is greater than the length of the associated joining element **38**. Accordingly, the segments **126** are free to move, relative to the joining elements **38**, causing the joining element **38** to insert farther into one segment **126** and to pull away from the adjacent segment **126**.

[0046] With specific reference to FIGS. **2** and **3**, each side **24**, **24'** of each segment **126** comprises an outer surface **128**, which functions as a standard braking surface. The outer surface **128** provides a substantially flat surface or face that is configured to be contacted by a brake surface, such as a brake shoe or pad controlled by a braking mechanism. Optionally, the surface **128** may include regions that have been treated or machined to increase texture, hardness, or durability thereof to improve contact and, if necessary, to increase friction between the outer surface **128** and braking mechanism. Each side **24**, **24'** of each segment **126** also includes an inner surface **130** opposite the outer surface **128**. A portion of the inner surface **130** is configured to contact the front side surface **18** and flange **14** to provide a stopping force F thereto when the brake assembly **10** is in use. As shown in FIG. **2**, to facilitate contact between the segment **126** and flange **14**, the inner surface **130** of the segment **126** may include a thicker or wider portion **132** that physically contacts the front side surface **18** of the flange **14**. In that case, the segment has a generally tapered appearance that is thicker adjacent to the hub **12** and thinner near the outer circumferential side **144** of the segment **126**.

[0047] With continued reference to FIGS. **2** and **3**, the segments **126** may further comprise protrusions extending between the inner surfaces **130** of the front side **24** and the rear side **24'** each segment **126**. In some embodiments, as shown in FIGS. **1** to **4**, the protrusions comprise radially extending fins. In other embodiments, the protrusions may comprise ribs, baffles, columns, walls, or any combination thereof. The protrusions may be integrally formed with the inner surface **130** of the segment **126** or attached thereto using a known adhesive or fastener. The protrusions are arranged to direct a cooling airflow C (shown in FIG. **3**) or air flux across the surface of the flange **14** and inner surface **130** of the segment **126** for ventilating and cooling the flange **14** and segment **126**. Providing a continual supply of cool air when the disc assembly **10** is in use counteracts the effect of heat created from the contact between the segment **126** and braking mechanism. Cooling and ventilating the segment **126** provides a more even temperature gradient across the segment **126** that prevents degradation of the segment **126** as a result of thermal stresses and thermal expansion.

[0048] It is noted that for a wheel mounted brake disc, the front side **24** and the rear side **24'** of the segments **126** are separated. In that case, the protrusions include contact surfaces that contact the surface of the wheel or rotating body. Advantageously, when the sides **24**, **24'** are separated or divided in this manner, they are free to slide or move relative to one another. As a result, thermal expansion of the segments **126** is not restricted. Similarly, thermal stresses caused by expansion are not translated between opposing segments **126**, reducing the possibility that the protrusions will be damaged during use.

[0049] With continued reference to FIGS. **2** and **3**, as well as FIG. **4**, the protrusions may be radial fins **135** having a long, thin structure with substantially flat opposing faces. The fins **135** are positioned to maximize ventilation through the brake disc assembly **10**. Maximizing ventilation enhances cooling of the brake disc segments **126**. As shown in FIG. **4**, the fins **135** may have a substantially rectangular or elliptical base area that contacts the inner surface **130** of the segment **126**. The fins **135** may extend radially outwardly along the inner surface **130** of the segment **126** from the inner circumferential edge **146** thereof to the outer

circumferential edge **144**. The fins **135** may be tapered, becoming narrower as the distance from the inner surface(s) **130** increases. The fins **135** may also be wider near the inner circumferential side **146** of the segment **126** and narrower near the outer circumferential side **144**, such that the distance between adjacent fins **135** increases farther away from the hub **12**.

[0050] In certain embodiments, the fins **135** may extend radially outward from the inner circumferential side **146** directly along a radius of the segment **126**. Alternatively, the fins **135** may be positioned elsewhere on the inner surface **130** of the segment **126** to obtain various airflow patterns. For example, in certain embodiments, some of the fins **135** may be positioned such that a central axis of the fin **135** is angled (for example by at least 5 degrees) relative to the radius of the segment **126**. In this orientation, distances between adjacent fins **135** increases substantially radially outward from the hub **12**. In certain other embodiments, a central axis of each fin **135** may be parallel to a central axis of adjacent fins. The fins **135** may also be different lengths, such that fins **135** located near the radial ends **142** of the segment **126** are longer than fins **135** near the center of the segment **126**. As will be described hereinafter, having fins **135** with different lengths allows for various connection structures to be included on the inner surface **130** of the segment **126** for connecting the segment **126** to other segments **126** and/or to the hub **12** (shown in FIGS. **2** and **3**).

[0051] In certain embodiments, the fins **135** may be positioned to define channels **150** between adjacent fins **135**. For example, the channels **150** can be radially extending channels **150** as shown in FIGS. **1-4**. The channels **150** are enclosed by the radially extending sides of the fins **135**, the inner surfaces **130** of the opposing sides **24**, **24'** of the segments **126**, and the front and rear sides **18**, **20** of the flange **14**. External cool air enters the channels **150** through an inlet portion **152**, located between the inner circumferential side **146** of the segment **126** and the hub **12**, and passes through the channels **150** along cooling airflow C (shown in FIGS. **3** and **4**). The air is expelled from the channels **150** through outlet portions **154** located near the outer circumferential side **144** of the segments **126**. The inlet portion **152** may be an annular opening extending around the hub **12**. Alternatively, in certain embodiments, the inlet portion(s) **152** may be a number of distinct holes, slots, or openings located around the hub **12**. The outlet portion **154** may also be an annular opening, a partially annular opening, a slot, or a number of holes arranged around the outer circumferential side **144** of the segments **126**. In each case, however, the cross-sectional area of the inlet portion **152**, even if maximized, is less than the cross-sectional area of the outlet portion **154**. Thus, the cross section area of the channels **150** increases farther away from the center of the disc **24**.

[0052] With specific reference to FIG. **4**, the increase in cross-sectional area between the inlet portion **152** and the outlet portion **154** causes the airflow rate or air speed to increase along the length of the channel **150**. The increased air speed improves ventilation and cooling of the segment **126**. To achieve the change in cross-sectional area, in certain embodiments, the width of the channels **150** increases along its length, such that the width D of the channel **150** near the inlet portion **152** is less than the width E of the channel **150** at the outlet portion **154** (shown in FIG. **3**).

[0053] The fins **135** may be arranged in various patterns to increase airflow through the channels **150**. For example, as described above, the length of the fins **135** may vary, such that fins **135** located near the radial ends **142** of the segment **126** are longer than fins **135** in a central portion of each segment **126**. In addition, fins **135** located near the radial ends **142** of the segment **126** may be contacted by a lateral member **156**. The lateral member **156** may house the socket **140** and joining element **38** illustrated in FIG. **1**. The lateral member **156** may block or restrict airflow through the channels **150** located adjacent to the member **156**, thereby forcing air through other channels **150**.

[0054] With reference again to FIGS. **2** to **4**, each segment **126** further includes at least one fixation point for connecting the segment **126** to the hub **12**. Desirably, the number of fixation points on each segment **126** is minimized to reduce the number of airflow restricting structures or protrusions extending from the inner surface **130** of the segment **126**. Minimizing the number of airflow restricting structures maximizes the air flux between the segment **126** and wheel hub **12** leading to an improved ventilation effect. Preferably, the segment **126** includes only a single fixation point, generally positioned near the inner circumferential side **146** of the segment **126**.

[0055] For example, the fixation point may be a transverse through-hole **158** (not shown in FIG. **3**) extending between the outer surface **128** (not shown in FIG. **4**) and the inner surface **130** of the segment **126**. Preferably, each segment **126** includes only one transverse through-hole **158**. In certain embodiments, the segment **126** may also include an extended portion **160** (shown in FIG. **4**) or bracket to accommodate the through-hole **158**. The through-hole **158** may be surrounded by the wider portion **132** of the inner surface **130**. As shown in FIG. **4**, the wider portion **132** may be integrally formed with one of the fins **135**. The wider portion **132** of the fins **135** restricts or limits airflow through the brake disc **24**, reducing the effectiveness of the ventilation. Therefore, reducing the number of through-holes **158** increases the efficiency of ventilating the brake disc. The wider portion **132** may have a channel **150** on either side thereof. The arrangement and shape of the wider portion **132** of the inner surface **130** allows for good airflow to ventilate heat away from the wider portion **132** of the inner surface **130** and through-hole **158**.

[0056] Through-holes **158** are configured to receive a fastener **62**, such as a pin, screw, or bolt, for connecting the brake disc **2** to the flange **14** of the hub **12**. The flange **14** includes a bore **64** aligned with each through-hole **158** and configured to receive the fastener **62**. The fastener **62** should be sufficiently strong to support loads generated by contact between the brake disc segments **126** and the brake surface. As described above, the present inventor recognized that the number of through-holes **158** should be minimized to increase airflow through the brake disc **24**. Accordingly, the fastener **62** may have enhanced strength and resistance to deformation to absorb greater rotational forces created since the segment **126** is only connected to the hub **12** at a single fixed point. The fastener **62** may be inserted through the through-hole **158** and bore **64** of the flange **14** to rigidly and fixedly connect the segments **126** to the flange **14** and hub **12**.

[0057] In certain embodiments, the through-holes **158** may be deep enough so that a top portion of the fastener **62** is recessed within the through-hole **158** so that it does not

extend above the through-hole **158** opening. Recessing the fastener **62** ensures that it does not contact or obstruct the brake surface, such as the brake shoe or brake pad.

[0058] In use, the brake disc assembly **10** is rotated by rotation of an axle connected to the hub **12**, causing the brake disc **2** attached thereto to rotate as well. The rotation produces a centrifugal effect in which air is forced radially outward from the assembly **10** through outlet portions **154** defining by the segments **126**. More specifically, in some examples, the radial fins **135** are arranged to produce a centrifugal pumping effect in which air is drawn into the channels **150** through the inlet portion **152** and expelled through the outlet portion **154** along cooling airflow path C shown in FIG. **3**.

[0059] To stop or slow rotation of the axle, the braking force F is applied to the outer surface(s) **128** of the segments **126**. The braking force F is transmitted to the flange **14** and hub **12** by the protrusions of the segments **126** and the fastener **62** extending through the flange **14**. More particularly, the force F is applied in the circumferential direction causing the segments **126** contacted by the brake surface (e.g., the brake shoe or pads) to pivot about a fixation point defined by the through-hole **158**, thereby transmitting force to adjacent segments **126** as well. Since the segments **126** are slidably connected by the joining elements **38**, the segments **126** are permitted to pivot or rotate in response to the applied force. However, since forces applied to adjacent segments **126** on opposite sides of the contacted segment **126** are equal in force, but opposite in direction, rotation of the segments **126** is restricted. Therefore, the segments **126** are effectively locked together, meaning that the brake disc **10** functions as a continuous or unitary structure, even though the segments **126** are separated by the radial gap **36**, and otherwise would be capable of rotation about the fixation point.

[0060] When the brake assembly **10** is in use, heat H (shown in FIG. **3**) is created causing the contacted segments **126** to expand. The heat H is translated from the segments **126** through the protrusions, such as the fins **135**, to the flange **14** and hub **12**. The segments **126** are also exposed to centripetal forces that tend to push the segments **126** radially outward away from the hub **12**. The fastener **62** must be mechanically strong enough to counteract such centripetal force to prevent the segments **126** from sliding outward away from the hub **12**. The rotational or centripetal force caused by rotation of the brake disc assembly **10** also draws cooling air into the brake disc **24** through the inlet portion **152**. The airflow C is directed through the channels **150** and flows past the fins **135**, flange **14**, and inner surface **130** of the segment **126**. The cooling airflow C also flows around the wider portion **132** of the inner surface **130** surrounding the through-hole **158**. The heat H is transferred from the surfaces of the flange **14** and segments **126** to the airflow C and driven away from the brake disc assembly **10** through the outlet portion **154** as a result of the centrifugal pumping motion described above. In this way, heat H is ventilated away from the segment **126** and brake disc assembly **10** to improve braking performance and to prevent the segment **126**, flange **14**, and hub **12** from structurally degrading from prolonged use.

[0061] With reference to FIGS. **5** to **8**, another example brake disc assembly **210** comprising a friction ring or brake disc **202** connected to a hub **12** is illustrated. The brake disc **202** is arranged to direct airflow through the brake disc **202** in the inverse direction from the airflow in the brake discs **2** described in connection with FIGS. **1** to **4**. For example, as described herein, by removing or reducing the number and density of radial fins **135**, the pumping effect described in connection with FIGS. **1** to **4** can be reduced or eliminated. Instead, in the brake disc **202**, cooling air may be drawn into the disc **202** through openings at the outer circumferential edge thereof and directed through the brake disc **202** towards outflow elements located adjacent to the hub **12** or axle of the brake assembly **210**.

[0062] In some examples, the brake disc **202** comprises a plurality of segments **226** connected together to form a ring. The disc **202** can comprise about five segments, substantially identical in size and shape. The segments **226** can be connected together in a circumferential direction by pins or joining elements **238**, extending between adjacent segments **226**. The joining elements **238** can create gaps **236** between adjacent segments **226**. The gap **236** permits expansion and contraction of the segments **226** during use.

[0063] The segments **226** can comprise a front side **224** and a rear side **224'**, each having an outer surface **228**, configured to be contacted by a brake surface to impart a braking force thereto, and an opposing inner surface **230**. As shown in FIGS. **6** and **7**, the front side **224** can be connected to and/or integrally formed with the rear side **224'** to form a unitary structure. As in previously described examples, the segments **226** are fixed to the hub **12** at fixation points, such as through-holes **258** positioned at radially inward portions of the segments **226** and sized to receive pins **62**. In some examples, each segment **226** is fixed to the hub **12** at only one fixation point, such as a fixation point defined by a single through-hole **258**. In this configuration, when connected to the hub **12**, the segment **226** is capable of rotating about the single fixation point.

[0064] The segments further comprise a plurality of protrusions extending between inner surfaces **230** of the sides **224**, **224'** of the segments **226**. As shown in FIGS. **5-8**, some of the protrusions can be transversely extending elements, such as ribs **236**. As used herein, a transversely extending element or structure refers to a structure having a transverse cross-sectional area that is greater than its radial cross-sectional area. The ribs **236** can be integrally formed with the segments **226** or fixedly connected thereto. In some examples, the ribs **236** may have a circular or elliptical radial cross section positioned to direct airflow passing through the segments **226** in a curved or curving airflow path. The airflow path is shown by arrow C in FIGS. **7** and **8**.

[0065] The ribs **236** can be positioned on the radially outer half or outer third of the segment **226**, and arranged such that at least one radius R (shown in FIG. **8**) of the segment **226** passes through at least two ribs **236**. In some examples, the through-hole **258** is positioned radially inwardly from the ribs **236**. As shown in FIG. **8**, the segment **226** may further comprise a number of protrusions in the form of radially extending fins **235**, similar in shape to fins **135** described in connection with FIGS. **1** to **4**. The fins **235** define channels **250** for directing airflow across the inner surface(s) of the segment **226**. In some examples, as shown in FIG. **8**, fins **235** extend from an inner circumferential surface of the middle portion of the segment **226**.

[0066] In use, the brake disc assembly **210** is rotated by rotation of an axle connected to the hub **12**, causing the brake disc **202** attached thereto to rotate as well. The rotation produces a centripetal effect in which air is drawn radially

inwardly through each segment **226**. For example, as show in FIGS. **7** and **8**, an airflow path of cooling air C is drawn into the brake disc **202** at inflow portions **254** located adjacent to an outer circumferential edge of each segment **226**.

[0067] Advantageously, the ribs **236** only cover or block a small portion of the inflow portion **254** of each segment **226** meaning that a substantial volume of cooling air can be drawn into the segment **226** in this manner. For example, the circumferentially outermost portions of each segment **226** may have only about three (3) to six (6), and preferably about four (4) ribs **236**. In comparison, the circumferentially outermost portions of the segment **126** shown in FIG. **4** includes about ten (10) to fifteen (15) fins **135**, which cover or block about 40 to 60 percent of the airflow through the segment **126**.

[0068] To stop or slow rotation of the axle, a braking force is applied to the outer surface(s) **228** of the segments **226**. The braking force is transmitted to the flange **14** and hub **12** by the protrusions (e.g., the fins **235** and ribs **236**) of the segments **226** and the fastener **62** extending through the flange **14**. The braking force can also cause the segments **226** to pivot about a fixation point defined by the through-hole **258**, thereby transmitting force to adjacent segments **226**.

[0069] When the braking force is applied to the segment(s) **226**, heat H (shown in FIG. **7**) is created causing the contacted segments **226** to expand. The heat H is translated from the segments **226** through the protrusions (e.g., the fins **235** and ribs **236**) to the flange **14** and hub **12**. The heat H is counteracted by the cooling airflow C. Specifically, the airflow C passes around the ribs **236** and through the channels **250** defined by the fins **235**. The heat H is transferred from the surfaces of the flange **14** and segments **226** to the cooling airflow C and is driven away from the brake disc assembly **210** through the outlet portions **252**. In this way, heat H is ventilated away from the segment **226** and brake disc assembly **210** to improve braking performance and to prevent the segment **226**, flange **14**, and hub **12** from structurally degrading from prolonged use.

[0070] While specific embodiments of the brake disc and rotating body have been described in detail, it will be appreciated by those of ordinary skill in the art that various modifications and alternatives to those details could be developed in light of the overall teachings of the inventive subject matter. Accordingly, the particular arrangements disclosed are meant to be illustrative only and not limiting as to the scope of inventive subject matter which is to be given the full breadth of the claims appended and any and all equivalents thereof. Further, although the inventive subject matter has been described in detail for the purpose of illustration based on what is currently considered to be the most practical and preferred embodiments, it is to be understood that such detail is solely for that purpose and that the inventive subject matter is not limited to the disclosed embodiments, but, on the contrary, is intended to cover modifications and equivalent arrangements that are within the spirit and scope of the appended claims. For example, it is to be understood that the inventive subject matter contemplates that, to the extent possible, one or more features of any embodiment can be combined with one or more features of any other embodiment.

What is claimed is:

1. A friction ring comprising:

plural segments configured to be positioned around a hub or an axle to form a ring-shaped body, each of the segments including:

a front side and a rear side each having an outer surface positioned to be contacted by a brake mechanism and an inner surface positioned to contact a portion of the hub or the axle to impart a braking force;

one or more through-holes extending between the outer surface of the front side and the outer surface of the rear side and positioned to receive a fastener for fixing the segment to the hub or the axle; and

protrusions extending from the inner surface of the front side to the inner surface of the rear side of the segment, the protrusions forming a radially open channel therebetween,

wherein a cross-sectional area of an inflow portion of the channel between the protrusions is smaller than a cross-sectional area of an outflow portion of the channel between the protrusions.

2. The friction ring of claim **1**, wherein, for each of the segments, the channel extends between a circumferential inner edge and a circumferential outer edge of the segment and is positioned to direct airflow across the inner surface of the front side or the inner surface of the rear side of the segment.

3. The friction ring of claim **1**, wherein, for each of the segments, the inflow portion of the channel is disposed radially inward from the outflow portion of the channel such that airflow is directed from an inner circumferential edge to an outer circumferential edge of the segment.

4. The friction ring of claim **1**, wherein, for each of the segments, at least one of the through-holes is positioned to affix the segment to the hub or the axle at a fixation point to increase an air inlet area relative to the segment being affixed to the hub or the axle at multiple fixation points.

5. The friction ring of claim **1**, wherein the protrusions comprise radially extending fins.

6. The friction ring of claim **5**, wherein the radially extending fins are tapered in the radial direction such that a radially inner portion of the radially extending fins is narrower than a radially outer portion of the radially extending fins.

7. The friction ring of claim **6**, wherein the radially extending fins are tapered in a transverse direction such that portions of the radially extending fins closer to the inner surfaces than the outer surfaces are wider than portions of the radially extending fins that are closer to centers of the radially extending fins.

8. The friction ring of claim **5**, wherein each of the radially extending fins defines a linear longitudinal axis extending from a radially inner portion of the fin to a radially outer portion of the fin, and wherein the linear longitudinal axis of each of the radially extending fins is offset from a radius of the ring-shaped body by at least 5 degrees.

9. The friction ring of claim **5**, further comprising at least one transverse rib extending between a pair of neighboring fins of the radially extending fins.

10. The friction ring of claim **9**, wherein the one or more through-holes are positioned radially inwardly from the at least one transverse rib.

11. The friction ring of claim **1**, wherein the protrusions are positioned such that a single radius of the ring-shaped body passes through both of the protrusions.

12. A brake assembly comprising:

a brake disc including segments arranged to form a front friction ring and a rear friction ring, the front friction ring and the rear friction ring configured to contact a braking mechanism;

a hub configured to be connected to an axle, the hub comprising a central rotor and a radially extending flange encircling at least a portion of the central rotor; and

a pin fixed to and extending through the flange for fixing the brake disc to the flange, wherein each of the segments of the brake disc includes:

a front side and a rear side, each of the front side and the rear side comprising an outer surface configured to be contacted by the braking mechanism and an inner surface connected to a portion of the hub or the axle to impart a braking force to the hub or the axle;

one or more through-holes extending between the outer surface of the front side and the outer surface of the rear side of the segment for receiving the pin for connecting the segment to the hub or the axle; and

protrusions extending from the inner surface of the front side to the inner surface of the rear side of the segment, the protrusions forming a radially open channel therebetween, wherein a cross-sectional area of an inflow portion of the channel between the protrusions is smaller than a cross-sectional area of an outflow portion of the channel between the protrusions.

13. The brake assembly of claim **12**, wherein, for each of the segments, the channel extends between a circumferential inner edge and a circumferential outer edge of the inner surface of the sides of the segment, the channel positioned to direct airflow across the inner surface of the front and rear side of the segment.

14. The brake assembly of claim **12**, wherein each of the segments is fixed to the hub at a single fixation point.

15. The brake assembly of claim **14**, wherein, while fixed to the hub, each of the segments is rotatable about the single fixation point.

16. The brake assembly of claim **12**, wherein each of the segments is fixed to the hub at a single fixation point to increase an air inlet area relative to the segments being fixed to the hub at multiple fixation points.

17. The brake assembly of claim **12**, wherein the protrusions comprise a radially extending fin, and further comprising one or more transverse ribs extending between the radially extending fins, the transverse ribs positioned to define a curving airflow path.

18. The brake assembly of claim **12**, wherein the protrusions are positioned such that a radius of one or more of the segments passes through at least two of the protrusions.

19. A brake disc comprising:

one or more segments each including a front side and a rear side, each of the front side and the rear side comprising an outer surface configured to be contacted by a brake mechanism and an inner surface configured to contact a portion of a hub or an axle to impart a braking force to the hub or the axle;

one or more through-holes extending from the outer surface of the front side to the outer surface of the rear side, the one or more through-holes shaped to receive one or more pins for connecting to the hub or the axle; and

protrusions extending from the inner surface of the front side to the inner surface of the rear side, the protrusions forming a radially open channel therebetween,

wherein a cross-sectional area of an inflow portion of the channel between the protrusions is smaller than a cross-sectional area of an outflow portion of the channel between the protrusions.

20. The brake disc of claim **19**, wherein the channel extends between a circumferential inner edge and a circumferential outer edge and is positioned to direct airflow across the inner surface of the front side and the inner surface of the rear side.

* * * * *