(12) INTERNATIONAL APPLICATION PUBLISHED UNDER THE PATENT COOPERATION TREATY (PCT)

(19) World Intellectual Property Organization
International Bureau

(43) International Publication Date
9 July 2015 (09.07.2015)

WIPO | PCT

(10) International Publication Number
WO 2015/102704 A3

(51) International Patent Classification:
G06K 9/00 (2006.01) *E05B 39/04* (2006.01)

(21) International Application Number:
PCT/US2014/059607

(22) International Filing Date:
8 October 2014 (08.10.2014)

(25) Filing Language: English

(26) Publication Language: English

(30) Priority Data:
61/888,130 8 October 2013 (08.10.2013) US

(71) Applicant: **SRI INTERNATIONAL** [US/US]; 333 Ravenswood Avenue, Menlo Park, California 94025 (US).

(72) Inventors: **PERNA, Steven N.**; 266 Bakers Basin Road, Lawrenceville, New Jersey 08648 (US). **CLIFTON, Mark A.**; 33 Robbins Street, Brick, New Jersey 08724 (US). **KIM, Jongjin**; 9 Picasso Court, East Windsor, New Jersey 08520 (US). **MAPEN, Barry E.**; 324 Elm Street, Stonington, Connecticut 06378 (US). **ACKERMAN, David A.**; 7 East Prospect Street, Hopewell, New Jersey 08525 (US). **LANZILLOTTO, Ann-Marie**; 23 Oleander Court, Lawrenceville, New Jersey 08638 (US). **DAVIS, Timothy J.**; 321 White Pine Road, Columbus, New Jersey 08022 (US). **VAN SANT, Glen J.**; 414 Valley Road, Langhorne, Pennsylvania 19047 (US). **BERGEN, James R.**; 57 East Prospect Street, Hopewell, New Jersey 08525 (US). **MARGICIN, John M.**; 53 Danby Way, Langhorne, Pennsylvania 19047 (US). **FLEISCH, Michael P.**; 21 Constitution Court, Manalapan, New Jersey 07726 (US). **PIRO, Stephen J.**; 540 New Albany Road, Moorestown, New Jersey 08057 (US). **WADE, David J.**; 37 Briar Patch Road, Stonington, Connecticut 06378 (US). **VARMA, Bobby S.**; 21 Kensington Court, Princeton, New Jersey 08540 (US). **RICHARDS, Kevin E.**; 59 Birchwood Drive, Narragansett, Rhode Island 02882 (US). **BHANGLEY, Jitendra J.**; 7 Sudbury Road, Morganville, New Jersey 07751 (US).

(74) Agent: **ORICH, Christine M.**; Barnes & Thornburg LLP, 11 South Meridian Street, Indianapolis, Indiana 46204 (US).

(81) Designated States *(unless otherwise indicated, for every kind of national protection available)*: AE, AG, AL, AM, AO, AT, AU, AZ, BA, BB, BG, BH, BN, BR, BW, BY, BZ, CA, CH, CL, CN, CO, CR, CU, CZ, DE, DK, DM, DO, DZ, EC, EE, EG, ES, FI, GB, GD, GE, GH, GM, GT, HN, HR, HU, ID, IL, IN, IR, IS, JP, KE, KG, KN, KP, KR, KZ, LA, LC, LK, LR, LS, LU, LY, MA, MD, ME, MG, MK, MN, MW, MX, MY, MZ, NA, NG, NI, NO, NZ, OM, PA, PE, PG, PH, PL, PT, QA, RO, RS, RU, RW, SA, SC, SD, SE, SG, SK, SL, SM, ST, SV, SY, TH, TJ, TM, TN, TR, TT, TZ, UA, UG, US, UZ, VC, VN, ZA, ZM, ZW.

(84) Designated States *(unless otherwise indicated, for every kind of regional protection available)*: ARIPO (BW, GH, GM, KE, LR, LS, MW, MZ, NA, RW, SD, SL, ST, SZ,

[Continued on next page]

(54) Title: IRIS BIOMETRIC RECOGNITION MODULE AND ACCESS CONTROL ASSEMBLY

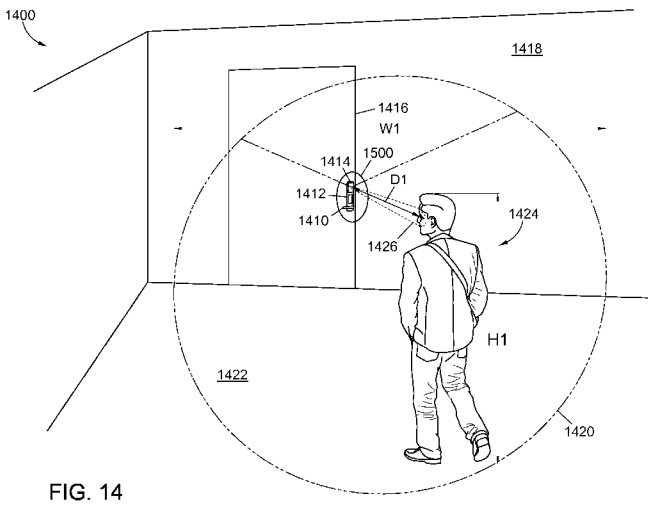

FIG. 14

(57) Abstract: An iris biometric recognition module includes technology for capturing images of an iris of an eye of a person, whether the person is moving or stationary, and whether the person is located near the iris image capture device or at a distance from the iris image capture device. The iris biometric recognition technology can perform an iris matching procedure for, e.g., authentication or identity verification purposes. The iris biometric recognition module can be incorporated into, for example, a door lock assembly and other access controlled devices, mechanisms, and systems.

WO 2015/102704 A3

TZ, UG, ZM, ZW), Eurasian (AM, AZ, BY, KG, KZ, RU, TJ, TM), European (AL, AT, BE, BG, CH, CY, CZ, DE, DK, EE, ES, FI, FR, GB, GR, HR, HU, IE, IS, IT, LT, LU, LV, MC, MK, MT, NL, NO, PL, PT, RO, RS, SE, SI, SK, SM, TR), OAPI (BF, BJ, CF, CG, CI, CM, GA, GN, GQ, GW, KM, ML, MR, NE, SN, TD, TG).

Published:

— *with international search report (Art. 21(3))*

— *before the expiration of the time limit for amending the claims and to be republished in the event of receipt of amendments (Rule 48.2(h))*

(88) Date of publication of the international search report:
10 November 2016

INTERNATIONAL SEARCH REPORT

International application No.

PCT/US 2014/059607

A. CLASSIFICATION OF SUBJECT MATTER

G06K 9/00 *(2006.01)*
E05B 39/04 *(2006.01)*

According to International Patent Classification (IPC) or to both national classification and IPC

B. FIELDS SEARCHED

Minimum documentation searched (classification system followed by classification symbols)

G06K 9/00, H04N 7/00-7/18, A61B 5/00-5/117, E05B 39/00-39/04

Documentation searched other than minimum documentation to the extent that such documents are included in the fields searched

Electronic data base consulted during the international search (name of data base and, where practicable, search terms used)

PatSearch (RUPTO internal), USPTO, PAJ, Esp@cenet, DWPI, EAPATIS, PATENTSCOPE

C. DOCUMENTS CONSIDERED TO BE RELEVANT

Category*	Citation of document, with indication, where appropriate, of the relevant passages	Relevant to claim No.
X	US 2010/0290668 A1 (MARC D. FRIEDMAN et al.) 18.11.2010, abstract, par. [0035], [0081], [0148], [0062], [0071], [0111], [0094], [0058], [0064], fig. 5, 6, 7A	1-25
Y		28, 30-33, 36-40
X	US 2007/0014439 A1 (OMRON TATEISI ELECTRONICS CO) 18.01.2007, par. [0053], [0507], [0228], [0229], [0245], [0285], [0295], [0273], [0316], [0516]	26-27, 29, 34-35
Y		28, 30-33, 36-40

☐ Further documents are listed in the continuation of Box C.

☐ See patent family annex.

* Special categories of cited documents:

"A" document defining the general state of the art which is not considered to be of particular relevance

"E" earlier document but published on or after the international filing date

"L" document which may throw doubts on priority claim(s) or which is cited to establish the publication date of another citation or other special reason (as specified)

"O" document referring to an oral disclosure, use, exhibition or other means

"P" document published prior to the international filing date but later than the priority date claimed

"T" later document published after the international filing date or priority date and not in conflict with the application but cited to understand the principle or theory underlying the invention

"X" document of particular relevance; the claimed invention cannot be considered novel or cannot be considered to involve an inventive step when the document is taken alone

"Y" document of particular relevance; the claimed invention cannot be considered to involve an inventive step when the document is combined with one or more other such documents, such combination being obvious to a person skilled in the art

"&" document member of the same patent family

Date of the actual completion of the international search	Date of mailing of the international search report
01 August 2016 (01.08.2016)	13 October 2016 (13.10.2016)

Name and mailing address of the ISA/RU:	Authorized officer
Federal Institute of Industrial Property, Berezhkovskaya nab., 30-1, Moscow, G-59, GSP-3, Russia, 125993 Facsimile No: (8-495) 531-63-18, (8-499) 243-33-37	S. Zhuravlev Telephone No. 499-240-25-91