Jan. 29, 1929. 1,700,383

S. SMIGIELSKI

STREET SIGN

Filed Feb. 29, 1928 3 Sheets-Sheet 1

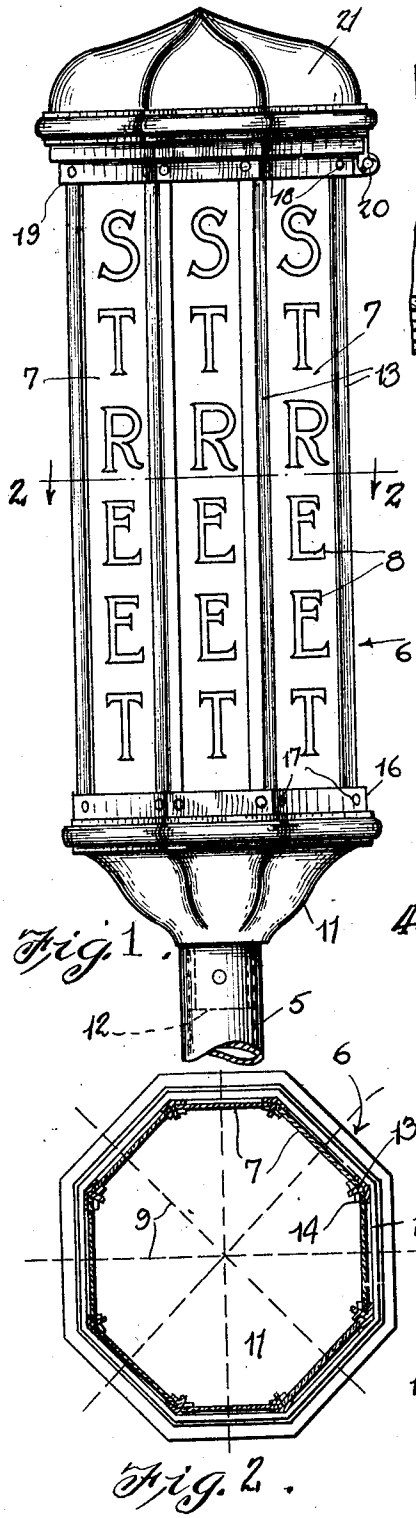

Fig. 1.

Fig. 2.

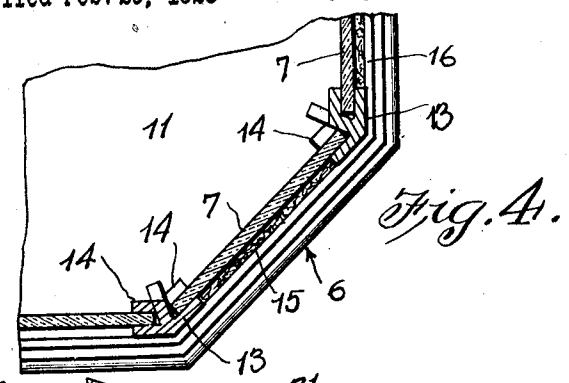

Fig. 4.

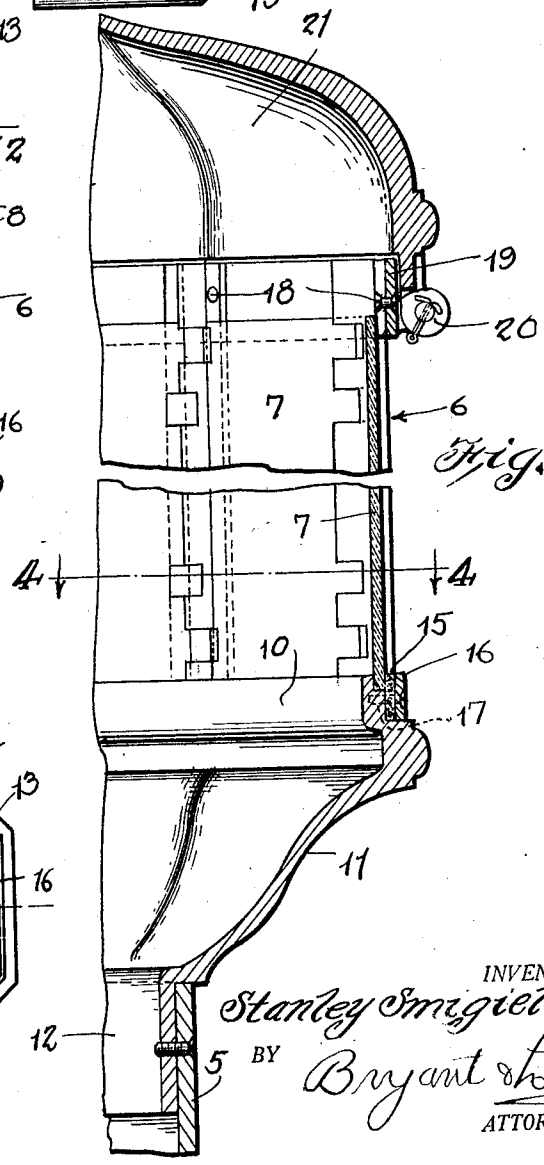

Fig. 3.

INVENTOR.
Stanley Smigielski.
BY Bryant & Lowry
ATTORNEYS

Jan. 29, 1929. 1,700,383

S. SMIGIELSKI

STREET SIGN

Filed Feb. 29, 1928 3 Sheets-Sheet 2

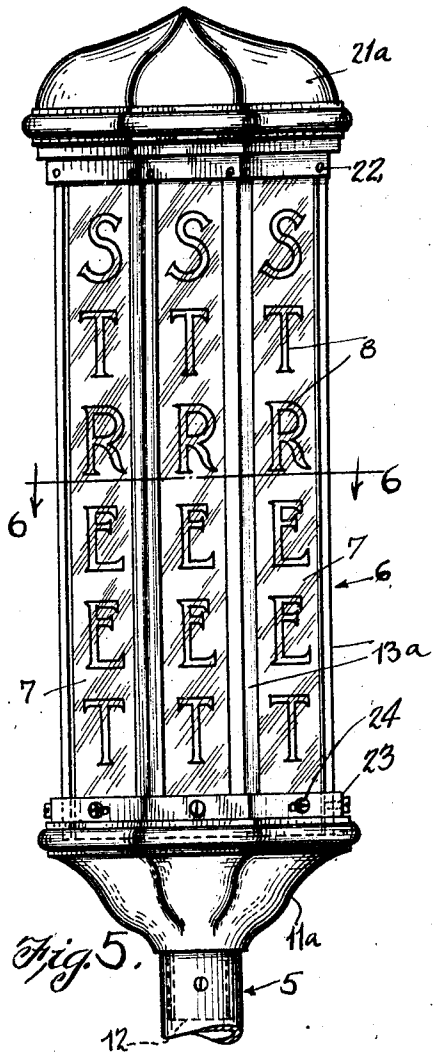

Fig. 5.

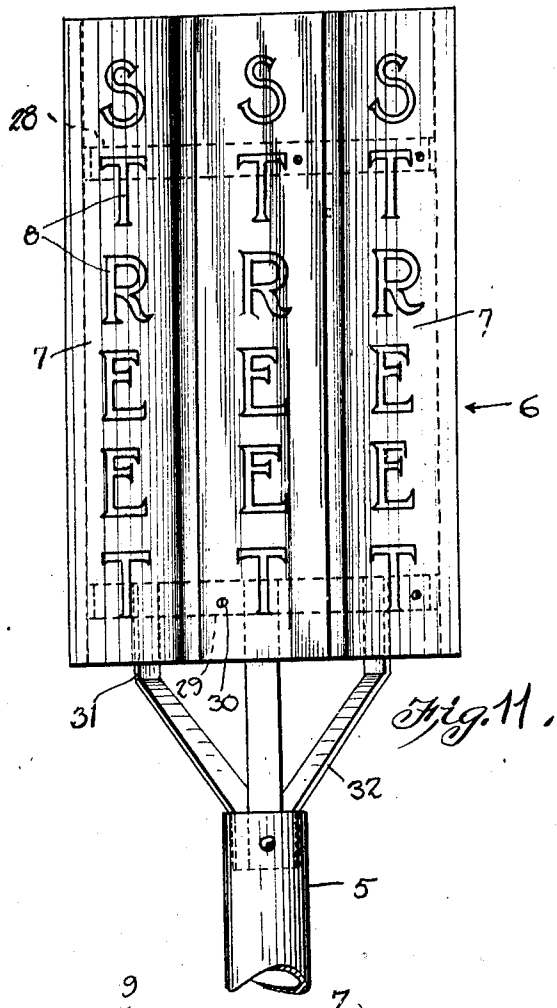

Fig. 11.

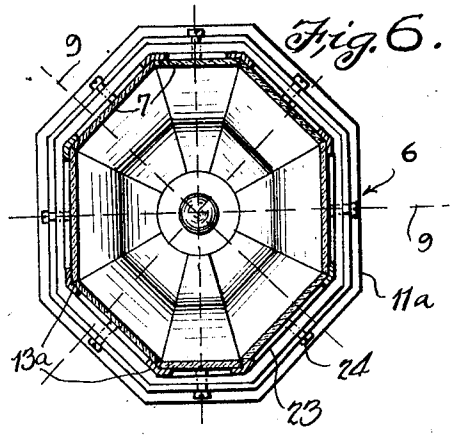

Fig. 6.

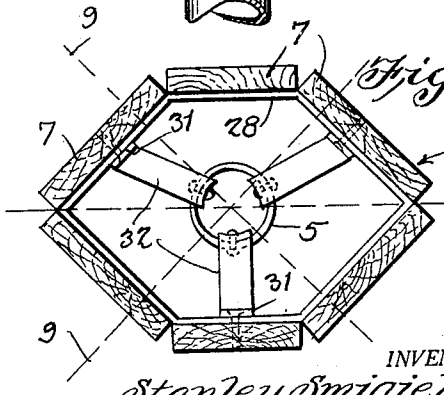

Fig. 12.

INVENTOR.
Stanley Smigielski.
BY
Bryant & Lowry
ATTORNEYS

Jan. 29, 1929. 1,700,383

S. SMIGIELSKI

STREET SIGN

Filed Feb. 29, 1928 3 Sheets-Sheet 3

Fig. 9.

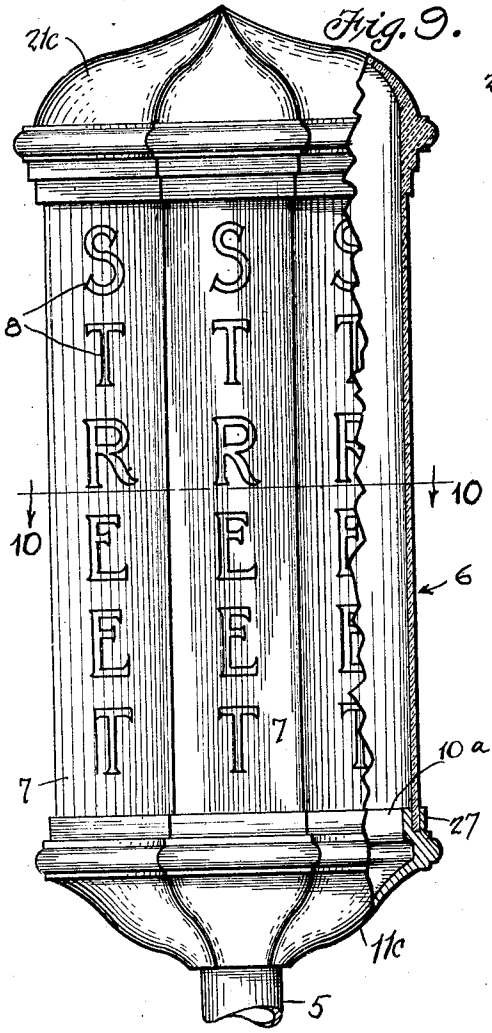

Fig. 7.

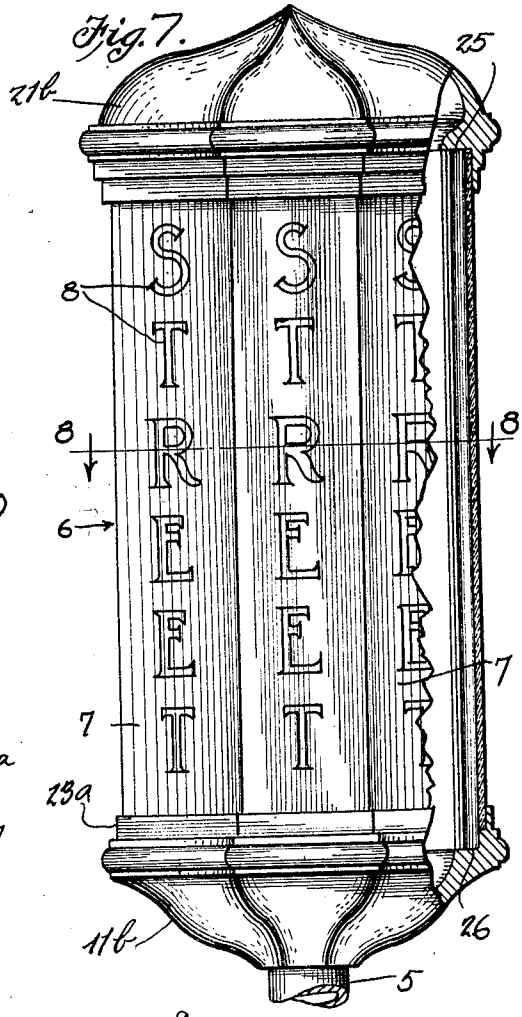

Fig. 10.

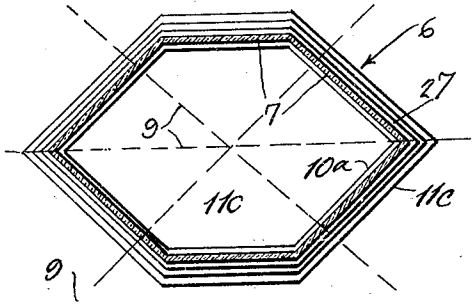

Fig. 8.

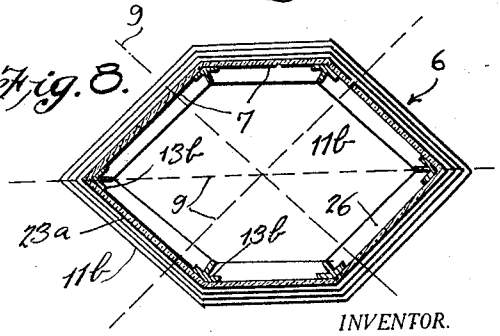

INVENTOR.

Stanley Smigielski.

BY Bryant & Lowry

ATTORNEYS

Patented Jan. 29, 1929. 1,700,383

UNITED STATES PATENT OFFICE.

STANLEY SMIGIELSKI, OF DETROIT, MICHIGAN.

STREET SIGN.

Application filed February 29, 1928. Serial No. 258,001.

This invention relates to improvements in street signs, and the primary object of the invention is to provide a sign of this kind particularly adapted for use centrally of the intersection of a plurality of more than two intersecting streets and so constructed as to clearly designate and exhibit the names of the respective streets in a most desirable manner.

A more particular object is to provide a street sign of the above kind which is of simple and compact form and which is of such small horizontal dimension as to not be objectionable for use in the manner specified above, but which is of such form as to permit the clear display of the street names for being readily discerned from a distance.

A more specific object of the invention is to provide an improved street sign of the above kind capable of being readily illuminated to clearly display the names of the streets at night.

Other objects will appear as the nature of the invention is better understood, and the same consists in the novel form, combination and arrangement of parts hereinafter more fully described, shown in the accompanying drawings and claimed.

In the drawings:—

Figure 1 is a side elevational view, partly broken away and removed, of one form of street sign embodying the present invention;

Figure 2 is a horizontal section taken on line 2—2 of Figure 1;

Figure 3 is an enlarged fragmentary vertical section of the device shown in Figure 1, partly broken away;

Figure 4 is a horizontal section on line 4—4 of Figure 3;

Figure 5 is a view similar to Figure 1 of another form of street sign embodying the present invention;

Figure 6 is a horizontal section on line 6—6 of Figure 5;

Figure 7 is a view somewhat similar to Figure 1, and partly broken away and in section, of still another form of street sign embodying the present invention;

Figure 8 is a horizontal section taken on line 8—8 of Figure 7;

Figure 9 is a view similar to Figure 7 of a further form of street sign embodying the present invention;

Figure 10 is a horizontal section on line 10—10 of Figure 9;

Figure 11 is a view similar to Figure 1 of a still further form of street sign embodying the present invention; and

Figure 12 is a top plan view of the construction shown in Figure 11.

Referring more in detail to the drawings, the present street sign includes a supporting post 5 and an upright tubular sign body 6 of vertically elongated form mounted upon the upper end of the post 5, said post being of any desired well known or preferred construction and accordingly having only the upper end portion thereof shown. In each case the sign body 6 is in the form of an upright vertically elongated tube of such polygonal form in horizontal section as to provide a plurality of more than two pairs of oppositely disposed parallel vertical panels 7 of vertically elongated form adapted to receive the names of streets with the letters of said names superposed as at 8, each pair of opposed walls being disposed at an angle to the remaining pairs of walls to lie parallel with one of a plurality of more than two intersecting streets extending in the directions indicated by the dotted lines at 9. A well known example where a street sign of the present character may be used to advantage is in the case where a street extending from east to west is intersected by a street extending from north to south and by one or two avenues extending from northwest to southeast or from northeast to southwest, or both. Where the two streets extending at right angles to each other are intersected by only one avenue, the sign body will be of substantially hexagonal form in plan or horizontal section as shown with respect to certain forms of the invention in Figures 8, 10 and 12, and where the streets extending at right angles to each other are intersected by two avenues extending in opposite diagonal directions, the body of the sign will be of substantially octagonal form in plan or horizontal section as shown with respect to other forms of the invention in Figures 2 and 6. Where the sign is desired to be illuminated, the sides or panels 7 of the sign body are made of glass or other transparent material as shown with respect to all of the forms except that illustrated in Figures 11 and 12, the form of the invention in the latter figures being especially suitable for use in outlying districts where illumination is not provided for or deemed necessary.

In the form of the invention shown in

Figures 1 to 4 inclusive, the body 6 of the sign is composed of a plurality of separate flat glass panels disposed in spaced substantially edge to edge relation as well as at the required angle relative to each other about a common vertical center defining the vertical axis of the sign body, the assembled panels being fitted at their lower ends over the externally reduced larger upper end portions 10 of a suitably upwardly flaring ornamental hollow metal base 11 that has a central depending bottom neck or stud 12 fitted and suitably secured in the upper end of the tubular post 5. A joint rail of substantially T-shaped cross-section is provided as indicated at 13 between the adjacent vertical edges of each pair of adjacent panels 7, the oppositely projecting flanges of said rail flatly engaging the outer vertical marginal surfaces of the panels, and the intermediate flange of the rail projecting inwardly between such adjacent vertical edges of the panels as shown clearly in Figure 4. A plurality of pairs of lugs 14 are struck laterally from the inwardly projecting central flange of each joint rail 13 and clinched outwardly against the inner marginal surface portions of the panels so that they are effectively held in assembled relation outwardly against the oppositely projecting outer flanges of said rail 13 in an obvious manner. A suitable packing strip 15 is placed externally of and over the joint between the lower end of each panel 7 and the upper end portion 10 of the base member 11 between the lower ends of each pair of adjacent joint rails 13, and encompassing the lower ends of the rails 13 and the packing strips 15 is a suitable clamping band or securing ring 16 which holds the parts in place and may be fastened at intervals by means of screws 17 to the base member 11. As shown in Figure 3, the upper ends of the rails 13 project slightly above the upper ends of the panels 7, and snugly encompassing as well as riveted to the upper ends of the rails 13 is a mounting band 18 to which is hinged as at 20 a metallic ornamental dome or cover 21 for the sign body. Any suitable means may be provided within the sign body for illuminating the latter, and by swinging the dome or cover 21 upwardly, it may be open to have access to the interior of the sign body for renewal or repair purposes of any kind. The lower edge portion of the dome or cover 21 preferably fits over the upper portion of the band 19 to effectively exclude the entrance of rain, dust and the like. It will be seen that the outer flanges of the joint rails 13 overlie the adjoining edges of the panels 7, and this together with the packing strip 15 secured in place by the clamping band 16 complete a practical construction in which the joints are effectively sealed to exclude the entrance of water and other foreign matter into the sign body.

The construction shown in Figures 5 and 6 is similar in many respects to that above described in connection with Figures 1 to 4 inclusive. One distinction is that the joint rails 13^a are of angular form and are not provided with the inwardly projecting central flanges having the flexible lugs 14, the panels 7 being, in this instance, abutted with their vertical edges in contiguous relation at the inner sides of the rails 13^a as shown clearly in Figure 6. Also, the dome or cover 21^a is directly fitted onto and riveted as at 22 to the upper ends of the rails 13^a instead of being hinged to a band fitted about the latter. Still further, the body composed of the assembled panels 7 and rails 13^a is fitted at its lower end within a flange 23 at the top of the base 11^a, the body being retained in place by set screws 24 threaded through the flange 23 and impinging the lower ends of the panels 7 at their inner ends. Obviously, by loosening the set screws 24, the entire body may be lifted out of the base 11^a, suitable means being provided for holding the panels 7 in place relative to the rails 13^a and for connecting the lower ends of the latter so that the sign body may be removed as a unit with the cover 21^a to gain access to the interior of the sign body or to the illuminating means mounted therein and supported by the base 11^a. Otherwise, the construction of Figures 5 and 6 is similar to that of Figures 1 to 4 inclusive.

In the construction shown in Figures 7 and 8, the sign body is composed of a one-piece glass tube so that the panels are integrally joined, and this unitary sign body is fitted at its lower end within the flange 23^a on the top of the base 11^b, while the dome or cover 21^b is snugly fitted on the upper end of the sign body as shown in Figures 7. Suitable angular rails 13^b are disposed at the corners of and inside the sign body in this instance to reinforce the latter, said rails 13^b being suitably held in place and engaged at their upper and lower ends respectively with internal shoulders 25 and 26 provided in the cover 21^b and base 11^b. Any suitable means may be provided for holding the parts assembled such as set screws extending through the flanges of the cover 21^b and base 11^b and impinging the ends of the sign body similar to the manner in which lamp globes are fastened in conventional holders therefor.

In the form of the invention shown in Figures 9 and 10, the sign body is of unitary construction as with the form shown in Figures 7 and 8 and has an integral glass dome or cover 21^c formed on its upper end, while the lower end of the sign body is snugly fitted over the externally reduced upper end portion 10^a of the metallic base 11^c. The

base 11c may be provided with a flange 27 in spaced relation to the portion 10a so that the lower end of the sign body is removably received between the latter and said flange 27 as shown clearly in Figure 9.

In the construction shown in Figures 11 and 12, the panels 7 are of opaque material such as boards as shown or metal plates secured to the outside of polygonal upper and lower supporting bands 28 and 29 which are horizontally disposed in spaced superposed relation and which are so formed as to provide a plurality of more than two pairs of oppoitely disposed parallel portions as illustrated in Figure 12. The bands 28 and 29 are of rigid form and the panels may be secured thereto by means of screws 30 or the like, while the lower band 29 is rigidly fastened to the vertical upper end portion 31 of upwardly diverging supporting arms 32 whose lower ends are rigidly secured to and within the upper end of the post 5 as shown.

It will be apparent that with all of the forms of the invention except that shown in Figures 11 and 12, a suitable source of light may be suitably mounted within the stand body and supported by the base member of the sign so that the street names on the panels may be effectively illuminated for being readily discerned at night time, the letters forming the names of the streets being painted or otherwise suitably provided upon the panels.

From the above description it will be seen that I have provided a simple and practical form of street or road sign capable of practical use at the center of the intersection of a plurality of more than two intersecting streets or roads, the sign body being of relatively small horizontal area and having the names of the streets displayed so as to be clearly visible with the letters of the names of maximum size. By providing the sign body of tubular polygonal form as shown and described, the names of all of the intersecting streets or roads may be most conveniently ascertained if desired, and the various constructions may be readily and economically manufactured as well as effectively mounted in place.

Minor changes may be made without departing from the spirit and scope of the invention as claimed.

What I claim as new is:—

1. A street sign including a supporting post, an upright tubular sign body of vertically elongated form mounted on the upper end of said post, said sign body being of such polygonal form in horizontal section as to provide a plurality of more than two pairs of oppositely disposed parallel vertical panels of vertically elongated form adapted to receive the names of streets with the letters of the names superposed, each pair of opposed panels being disposed at an angle to the remaining pairs of panels to lie parallel with one of a plurality of more than two intersecting streets when the sign is mounted at the center of the street intersection, a hollow upwardly flaring base carried by the post and on which the lower end of the sign body is mounted, a dome covering the top of the sign body, said panels being of transparent material and having their vertical edges adjacently disposed, angular joint rails covering the joints between the adjacent vertical edges of the panels and extending between the base and the dome, and a band encircling and secured to the upper ends of the joint rails and having the dome hinged thereto.

2. A street sign including a supporting post, an upright tubular sign body of vertically elongated form mounted on the upper end of said post, said sign body being of such polygonal form in horizontal section as to provide a plurality of more than two pairs of oppositely disposed parallel vertical panels of vertically elongated form adapted to receive the names of streets with the letters of the names superposed, each pair of opposed panels being disposed at an angle to the remaining pairs of panels to lie parallel with one of a plurality of more than two intersecting streets when the sign is mounted at the center of the street intersection, a hollow upwardly flaring base carried by the post and on which the lower end of the sign body is mounted, a dome covering the top of the sign body, said panels being of transparent material and having their vertical edges adjacently disposed, angular joint rails covering the joints between the adjacent vertical edges of the panels and extending between the base and the dome, said base having an externally reduced top over which the sign body is fitted, packing strips extending between the lower ends of adjacent joint rails and covering the joints between the lower ends of the panels and the base, and a clamping band encircling the lower end of the sign body and securing the packing strips in place.

3. A street sign including a supporting post, an upright tubular sign body of vertically elongated form mounted on the upper end of said post, said sign body being of such polygonal form in horizontal section as to provide a plurality of more than two pairs of oppositely disposed parallel vertical panels of vertically elongated form adapted to receive the names of streets with the letters of the names superposed, each pair of opposed panels being disposed at an angle to the remaining pairs of panels to lie parallel with one of a plurality of more than two intersecting streets when the sign is mounted at the center of the street intersection, a hollow upwardly flaring base carried by the post and on which the lower end of the sign body

is mounted, a dome covering the top of the sign body, said panels being of transparent material and having their vertical edges adjacently disposed, and angular joint rails covering the joints between the adjacent vertical edges of the panels and extending between the base and the dome, said joint rails having intermediate flanges projecting inwardly between the adjacent vertical edges of the panels and having securing lugs struck oppositely therefrom and clinched against the inner sides of the panels to hold the latter in place.

In testimony whereof I affix my signature.

STANLEY SMIGIELSKI.