April 27, 1954

J. L. BONANNO

2,676,425

CROSSING GATE FOR TOY RAILROADS

Filed June 22, 1951

2 Sheets-Sheet 1

Fig. 2.

Fig. 1.

Fig. 3.

Fig. 5.

Fig. 4.

Fig. 6.

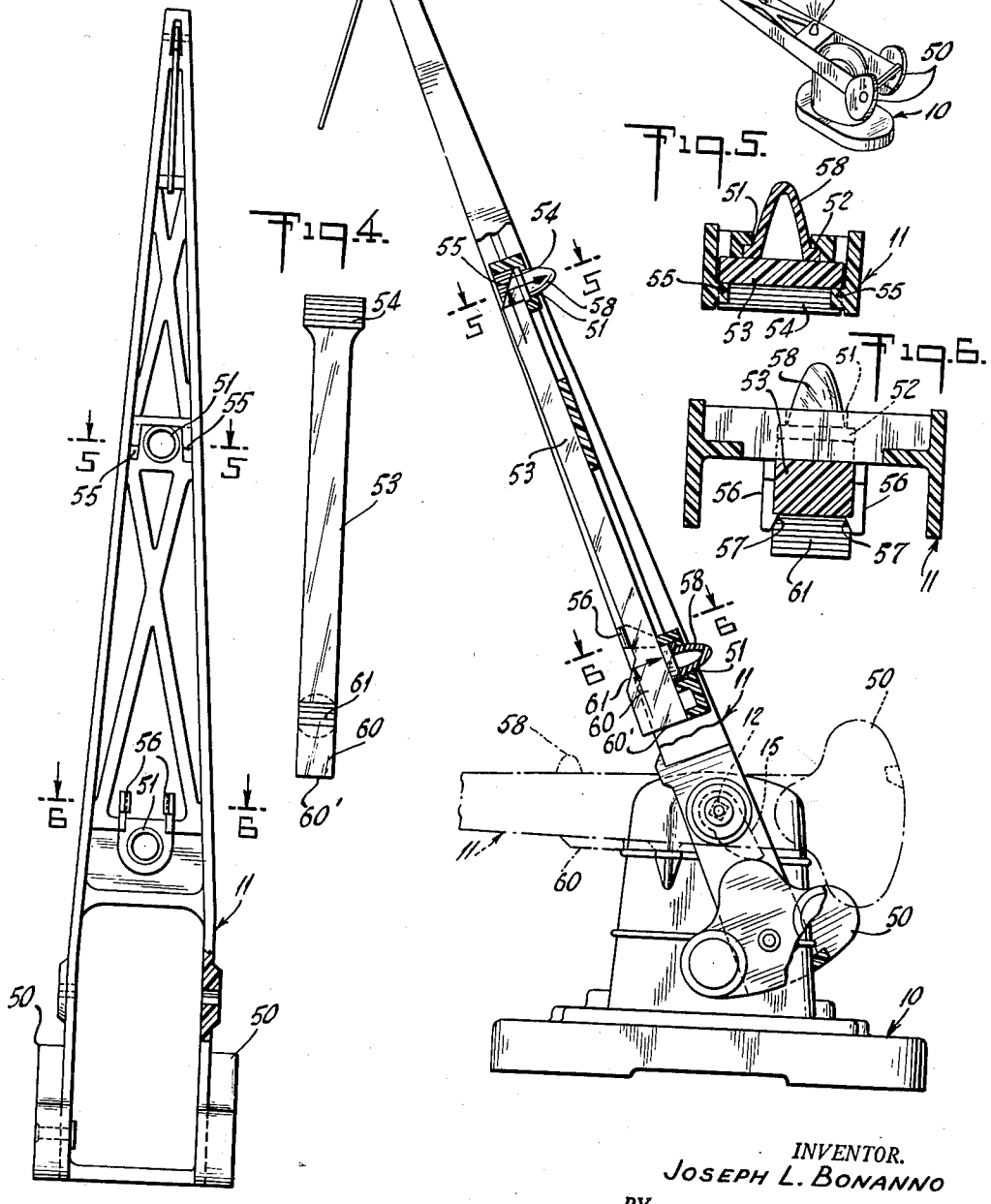

INVENTOR.
JOSEPH L. BONANNO

BY

ATTORNEY.

April 27, 1954

J. L. BONANNO

2,676,425

CROSSING GATE FOR TOY RAILROADS

Filed June 22, 1951

2 Sheets-Sheet 2

Fig. 7.

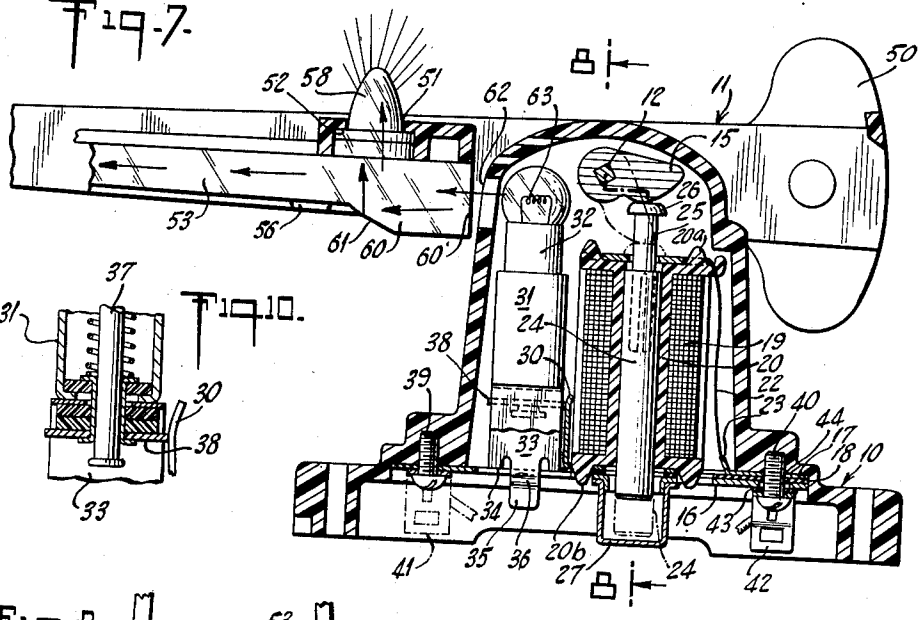

Fig. 10.

Fig. 8.

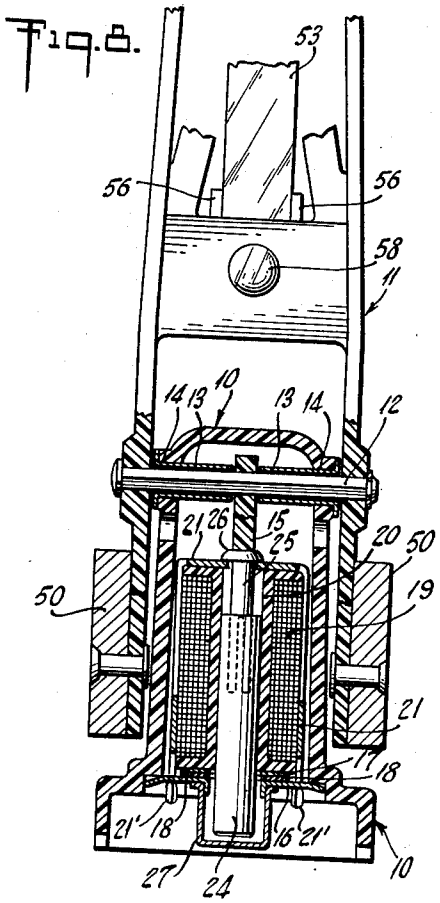

Fig. 9.

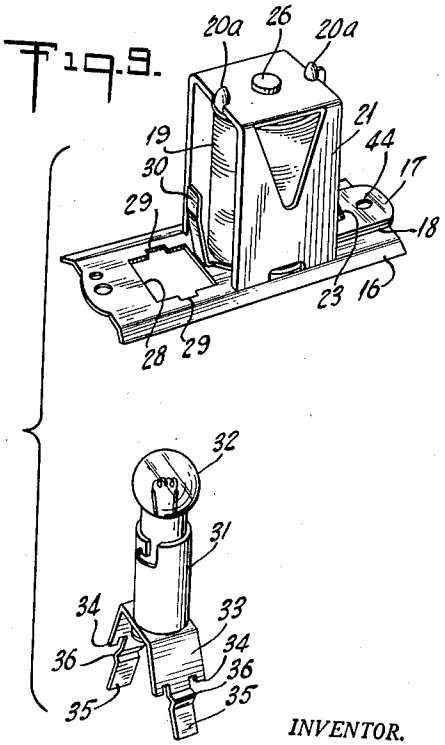

INVENTOR.
JOSEPH L. BONANNO

BY

ATTORNEY.

Patented Apr. 27, 1954

2,676,425

UNITED STATES PATENT OFFICE

2,676,425

CROSSING GATE FOR TOY RAILROADS

Joseph L. Bonanno, Madison, N. J., assignor to The Lionel Corporation, New York, N. Y., a corporation of New York

Application June 22, 1951, Serial No. 233,060

10 Claims. (Cl. 39—7)

1

This invention relates to crossing gates for toy railroads and is more particularly directed towards toy railroad crossing gates having electro-magnetic operating mechanism and lighted signal both of which are energized when the crossing gate is down and de-energized when it is raised.

The present invention contemplates toy railroad crossing gates having a base in which is housed an electrical unit including electro-magnet and lamp in parallel. The base supports a crossing gate arm, gravity biased to an up position and actuated by the electro-magnet to a lowered position. According to the present invention the electro-magnet and lamp and associated parts are in the form of a pre-assembled unit adapted to be secured in the base, and the lamp and lamp socket are removable for re-lamping.

According to the present invention the swinging arm of the crossing gate is provided with a transparent light transmitting member which receives light from the lighted lamp when the arm is down and re-directs this light to signals adapted to glow when the lamp is lighted.

Other and further objects will appear as the description proceeds.

The accompanying drawings show, for purposes of illustrating the present invention, one embodiment in which the invention may take form, it being understood that the drawings are illustrative of the invention rather than limiting the same.

In the accompanying drawings:

Figure 1 is a perspective view illustrating the crossing gate with the arm in a lowered position;

Figure 2 is an enlarged elevational view, with parts in section, showing in full lines the crossing gate in a raised position, and in dotted lines the crossing gate lowered;

Figure 3 is an elevational view of the underface of the cross gate arm with parts in section;

Figure 4 is a view from underneath showing the light transmitting member detached;

Figures 5 and 6 are enlarged sectional views on lines 5—5 and 6—6 respectively of Figures 2 and 3;

Figure 7 is enlarged longitudinal sectional view through the base and arm, the arm being lowered;

Figure 8 is a vertical sectional view on the broken line 8—8 of Figure 7; Figure 9 is a perspective view illustrating the operating unit with the lamp and lamp socket; and

Figure 10 is a fragmentary view of a detail.

In the drawings the base of the cross gate is indicated generally at 10, and the swinging arm at 11. These parts are made of molded plastic material. The base is recessed from underneath as indicated in the drawings, and the arm is carried on a squared shaft 12, the shaft passing through bearing tubes 13—13 mounted in openings 14 near the top of the side walls of the base. Between the tubes 13 the shaft 12 carries an arm 15 which shifts back and forth from full line position to dotted line position as indicated in Figure 7.

2

The operating unit for the crossing gate includes a magnetizable mounting plate 16 on which all parts are carried. A conducting plate 17 is insulated from the metal plate 16 by a sheet of insulation indicated at 18. A solenoid coil 19 is mounted on a coil form 20 and this coil form is held in position by a magnetizable yoke 21 having securing prongs 21'. One end of the coil is connected by wire 22 to the soldering lug 23 struck up from the conducting plate 17. The coil form 20 has projections 20a, 20b, which align it with the yoke and plate. The other end of the coil is grounded to the yoke. An armature 24 is carried in the coil form 20 and this armature carries a non-magnetic tip 25 which extends above the yoke and is provided with a head 26 adapted to engage the undersurface of the arm 15. A dust cap 27 is placed below the armature.

The plate 16 is provided with a squared opening 28 with side notches indicated at 29—29 to receive a lamp socket carrier to be described, and the conducting element 17 is provided with an upward bent resilient contact 30 to engage a socket contact. A bayonet type lamp socket 31, carrying lamp 32, is secured to an inverted U-shaped clip 33. This clip is resilient and has feet 34—34 and finger grips 35 with outwardly extending detents 36. The center contact of the lamp socket 37 is connected to a washer 38 insulated from the clips 33.

When the parts are in the position shown in Figure 7 the feet 34 of the socket carrier are held against the upper surface of the metal plate 18. The grips above the detents 36 are in the notches 29 and the detents engage the underside of the plate 16. The socket and socket carrier are thus held against movement. The spring contact 30 is in engagement with the washer 38 as indicated in Figure 10.

The plate 16, together with the electromagnet, the lamp and the lamp socket are secured in place in the base by screws indicated at 39 and 40. The screw 39 passes through a wiring clip 41, while

the screw 40 passes through a wiring clip 42 and insulating sheet 43 and is threaded through a hole 44 in the plate 17.

When the parts are assembled as indicated in Figures 7 and 8 the arm can be lowered by energizing the electromagnet and the same time the lamp 32 is lighted. Should it be necessary to replace the lamp the finger grips 35 may be pinched together enough to disengage the feet 34 from the upper surface of the plate 16 and the lamp, lamp socket and socket carrier bodily removed through the opening 28.

The crossing gate arm 11, is provided with counterweights 50 and is normally held in the position shown in Figure 2. The shape of the crossing gate arm is such as to resemble the usual crossing gate employed along the railroad right of way. As here shown the arm is provided with one or more openings 51 having downwardly facing shoulders 52—Figures 5 and 7. A transparent light transmitting member, preferably made of methyl methacrylate, is indicated at 53. It has an outer beveled end 54 adapted to fit behind ledges indicated 55—55 in the arm 11, Figure 3. Near the outer end the member 53 is received between two resilient fingers 56, having hooks 57 to hold the transmitting member in place. Each of the holes 51 receives a signal element 58 in the form of a red transparent moulding. These mouldings bear against the upper surface of the light transmitting member 53 and are held in place by it. The inner, or left end, of the light transmitting member 53 is deeper, as indicated at 60, and is provided with a sloping reflecting surface 61 below the inner one of the signal members 58.

The insulating base supporting the crossing gate is provided with an opening 62 opposite the filament 63 of the lamp 32 and so arranged that when the arm is in lowered position light rays from the lamp pass through the hole or window 62 and enter the end face 60 of the light transmitting member 53. This light is piped through the transmitting member and is reflected through its upper surface by one or the other of the reflecting surfaces 61 or 54 so that when the arm is in a lowered position the colored signal elements 58 glow.

Since it is obvious that the invention may be embodied in other forms and constructions within the scope of the claims, I wish it to be understood that the particular form shown is but one of these forms, and various modifications and changes being possible, I do not otherwise limit myself in any way with respect thereto.

What is claimed is:

1. An operating unit for a toy railroad crossing gate comprising a supporting plate, a magnet frame extending upwardly from the plate, a coil carried by and grounded to the frame, a plunger type armature in the coil, the armature being shiftable upwardly by the coil and having an exposed upper end, a coil connected conducting plate carried by and insulated from the supporting plate, the supporting plate having an aperture adjacent the coil, the conducting plate having a spring contact above the supporting plate, and a combined lamp, lamp socket and socket support all of a size to be inserted through the aperture, the socket having an insulated contact engageable by the spring contact, and a contact grounded to the socket support, the socket support being resilient and having fingers engageable with the supporting plate to releasably hold the socket support in place.

2. In a combination, a crossing gate for toy railroads comprising a supporting plate, a magnet frame extending upwardly from the plate, a coil carried by and grounded to the frame, a plunger type armature in the coil, the armature being shiftable upwardly by the coil and having an exposed upper end, a coil connected conducting plate carried by and insulated from the supporting plate, the supporting plate having an aperture adjacent the coil, the conducting plate having a spring contact above the supporting plate, a downwardly opening base having a recess into which the operating unit is insertable from below, and in which it is secured, a shaft carried by the base above the operating unit and having an arm engageable by the upper end of the plunger to rock it in one direction, and a crossing gate arm carried by the shaft and gravity biased in the other direction to an upper position, the gate arm having an illuminable signal in which light from the lamp escaping through a window in the base falls.

3. A crossing gate for toy railroads having a base, a gate arm pivotally carried at its end by the base, a longitudinally extending light transmitter carried by the arm and the base having a window opposite the lowered light transmitter having its inner end near the base, a lamp carried inside the base in a position to project its rays through the window and against the end of the light transmitter, the light transmitter having at its end a reflecting surface to redirect the light rays upwardly, and an illuminable signal on which reflected light is directed.

4. A crossing gate such as claimed in claim 3, wherein the light transmitter has a second reflecting surface nearer the base and out of the path of rays to the first reflecting surface, and having a second signal opposite the second reflector.

5. A crossing gate for toy railroads having a base, a gate arm pivotally carried at its end by the base, the gate arm being biased to an upper position, a base supported electromagnet having an armature acting on the arm to swing it down to a horizontal position and hold it there while energized, a lamp in parallel with the coil of the electromagnet, means supporting the lamp inside the base and adjacent a window opening in the base opposite the inner end of the arm when lowered, a transparent, arm-carried light transmitter positionable opposite the lighted lamp when the arm is lowered and a lantern simulating element lighted by the light transmitter.

6. A crossing gate for toy railroads comprising a signal lamp, a base enclosing the lamp and having an aperture in its side through which rays from the lamp escape in a generally horizontal direction, a crossing gate arm pivotally carried by the base, an elongated light transmitter carried by the arm in a position to accept light through the end thereof from the lamp when the arm is lowered and having along its lower face a plurality of reflecting surfaces to direct light out through its upper face, the arm having apertures opposite the reflecting surfaces for escape of reflected light, and colored light transmitting elements disposed across the aperture and adapted to glow when the gate arm is lowered and the lamp is lighted.

7. A crossing gate for toy railroads having a supporting base with both an upper part and a lower part and a downwardly opening recess which extends from the upper part down through the

lower part, a gate arm pivotally carried by the upper part of the base, the arm being biased to an upper position and having a shifter within the recess in the base for moving the arm to a lower, generally horizontal, position, and an operating unit for the shifter comprising an electromagnet having a vertical magnet frame, a vertical magnet coil, and a downwardly biased armature adapted to be elevated when energized to engage the shifter, a closure plate to which the bottom of the magnet frame is secured, and means to secure the closure plate across the bottom of the recess to support the shifter operating unit.

8. A crossing gate as claimed in claim 7, wherein the operating unit also includes a lamp socket in parallel with the coil of the electromagnet, a filamentary lamp in the socket with the filament adjacent the gate arm pivot, and the base has a window opening opposite the filament of the lamp bulb.

9. A crossing gate such as claimed in claim 8, wherein the closure plate has an opening through

which the lamp and socket are downwardly removable for relamping.

10. A crossing gate such as claimed in claim 8, wherein the gate arm has light signals energized by light passing through the window when the gate arm is in lowered position.

References Cited in the file of this patent

UNITED STATES PATENTS

Number	Name	Date
844,284	Mendenhall	Feb. 12, 1907
879,168	Hill et al.	Feb. 18, 1908
943,352	Hummel	Dec. 14, 1909
1,447,506	Beck et al.	Mar. 6, 1923
1,741,748	White	Dec. 31, 1929
1,952,641	Vincent	Mar. 27, 1934
2,218,074	Smith	Oct. 15, 1940
2,267,282	Larson	Dec. 23, 1941
2,279,288	Orbeck	Apr. 7, 1942
2,362,131	Haggart	Nov. 7, 1944
2,493,991	Morrison	Jan. 10 1951