Office de la Propriété Intellectuelle du Canada
Un organisme d'Industrie Canada

Canadian Intellectual Property Office
An agency of Industry Canada

CA 2544617 A1 2005/06/16

(21) 2 544 617

(12) DEMANDE DE BREVET CANADIEN
CANADIAN PATENT APPLICATION

(13) A1

(86) Date de dépôt PCT/PCT Filing Date: 2004/10/28
(87) Date publication PCT/PCT Publication Date: 2005/06/16
(85) Entrée phase nationale/National Entry: 2006/05/03
(86) N° demande PCT/PCT Application No.: CH 2004/000644
(87) N° publication PCT/PCT Publication No.: 2005/053931
(30) Priorité/Priority: 2003/12/08 (DE103 57 578.2)

(51) Cl.Int./Int.Cl. *B29C 45/54* (2006.01),
B29C 45/50 (2006.01)

(71) Demandeur/Applicant:
BUEHLER AG, CH

(72) Inventeur/Inventor:
CHRISTEL, ANDREAS, CH

(74) Agent: MACRAE & CO.

(54) Titre : PROCEDE DE MOULAGE PAR INJECTION ET INSTALLATION DE MOULAGE PAR INJECTION MUNIE D'UNE EXTRUDEUSE A ARBRES MULTIPLES, NOTAMMENT EXTRUDEUSE ANNULAIRE

(54) Title: INJECTION MOLDING INSTALLATION AND INJECTION MOLDING INSTALLATION EQUIPPED WITH A MULTIPLE-SCREW EXTRUDER, PARTICULARLY A RING EXTRUDER

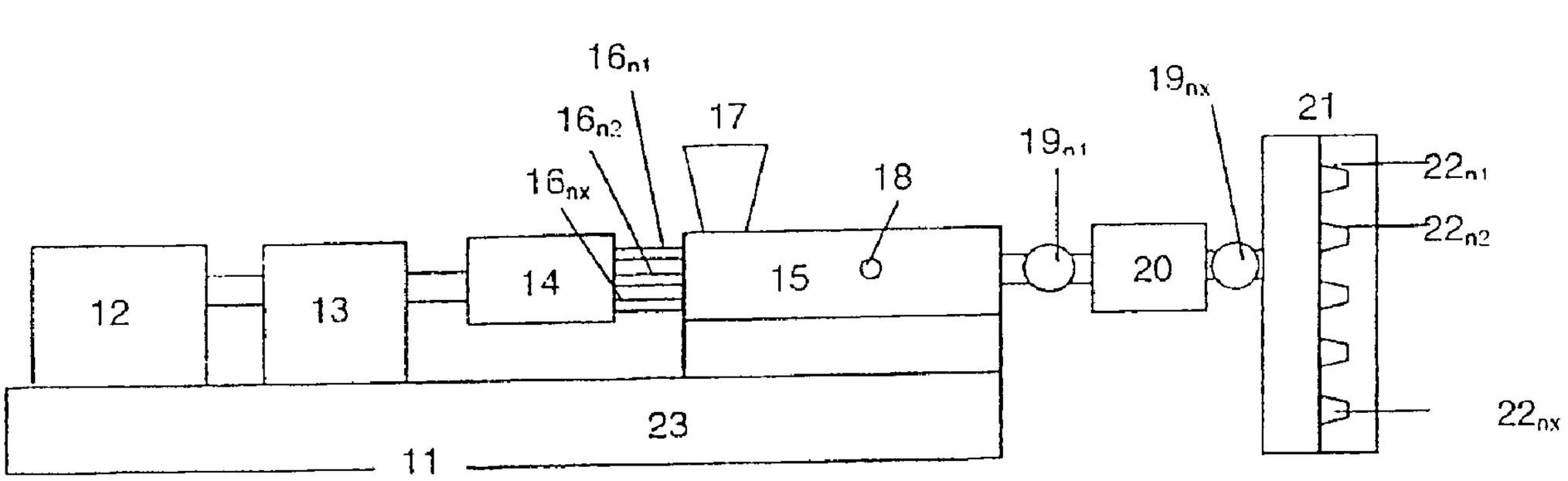

(57) Abrégé/Abstract:
The invention relates to a method and installation for carefully producing injection molded parts made of thermoplastic materials at high rates. The invention also relates to a method and installation for carefully producing injection molded parts made of thermoplastic materials while involving the simultaneous homogeneous incorporation of additives or the compounding of plastic mixtures. Finally, the invention relates to an installation that enables the continuously running plasticizing step in a multiple-screw extruder (11; 31) to be economically combined with the intermittently running injection molding process.

(12) NACH DEM VERTRAG ÜBER DIE INTERNATIONALE ZUSAMMENARBEIT AUF DEM GEBIET DES PATENTWESENS (PCT) VERÖFFENTLICHTE INTERNATIONALE ANMELDUNG

(19) Weltorganisation für geistiges Eigentum
Internationales Büro

(43) Internationales Veröffentlichungsdatum
16. Juni 2005 (16.06.2005)

PCT

(10) Internationale Veröffentlichungsnummer
WO 2005/053931 A1

(51) Internationale Patentklassifikation[7]: B29C 45/54, 45/50

(21) Internationales Aktenzeichen: PCT/CH2004/000644

(22) Internationales Anmeldedatum:
28. Oktober 2004 (28.10.2004)

(25) Einreichungssprache: Deutsch

(26) Veröffentlichungssprache: Deutsch

(30) Angaben zur Priorität:
103 57 578.2 8. Dezember 2003 (08.12.2003) DE

(71) Anmelder *(für alle Bestimmungsstaaten mit Ausnahme von US)*: **BÜHLER AG** [CH/CH]; Bühler AG, Bahnhofstrasse, CH-9240 Uzwil (CH).

(72) Erfinder; und

(75) Erfinder/Anmelder *(nur für US)*: **CHRISTEL, Andreas** [CH/CH]; Christel Andreas, Mettlenstrasse 22D, CH-9524 Zuzwil (CH).

(74) Gemeinsamer Vertreter: **BÜHLER AG**; CH-9240 Uzwil (CH).

(81) Bestimmungsstaaten *(soweit nicht anders angegeben, für jede verfügbare nationale Schutzrechtsart)*: AE, AG, AL, AM, AT, AU, AZ, BA, BB, BG, BR, BW, BY, BZ, CA, CH, CN, CO, CR, CU, CZ, DK, DM, DZ, EC, EE, EG, ES, FI, GB, GD, GE, GH, GM, HR, HU, ID, IL, IN, IS, JP, KE, KG, KP, KZ, LC, LK, LR, LS, LT, LU, LV, MA, MD, MG, MK, MN, MW, MX, MZ, NA, NI, NO, NZ, OM, PG, PH, PL, PT, RO, SC, SD, SE, SG, SK, SL, SY, TJ, TM, TN, TR, TT, TZ, UA, UG, US, UZ, VC, VN, YU, ZA, ZM, ZW.

(84) Bestimmungsstaaten *(soweit nicht anders angegeben, für jede verfügbare regionale Schutzrechtsart)*: ARIPO (BW, GH, GM, KE, LS, MW, MZ, NA, SD, SL, SZ, TZ, UG, ZM, ZW), eurasisches (AM, AZ, BY, KG, KZ, MD, RU, TJ, TM), europäisches (AT, BE, BG, CH, CY, CZ, DE, DK, EE, ES, FI, FR, GB, GR, HU, IE, IT, LU, MC, NL, PL, PT, RO, SE, SI, SK, TR), OAPI (BF, BJ, CF, CG, CI, CM, GA, GN, GQ, GW, ML, MR, NE, SN, TD, TG).

Erklärungen gemäß Regel 4.17:

— *hinsichtlich der Identität des Erfinders (Regel 4.17 Ziffer i) für die folgenden Bestimmungsstaaten AE, AG, AL, AM, AT, AU, AZ, BA, BB, BG, BR, BW, BY, BZ, CA, CH, CN,*

[Fortsetzung auf der nächsten Seite]

(54) Title: INJECTION MOLDING INSTALLATION AND INJECTION MOLDING INSTALLATION EQUIPPED WITH A MULTIPLE-SCREW EXTRUDER, PARTICULARLY A RING EXTRUDER

(54) Bezeichnung: SPRITZGUSSANLAGE UND SPRITZGIESSANLAGE MIT EINEM MEHRWELLENEXTRUDER, INBESONDERE RINGEXTRUDER

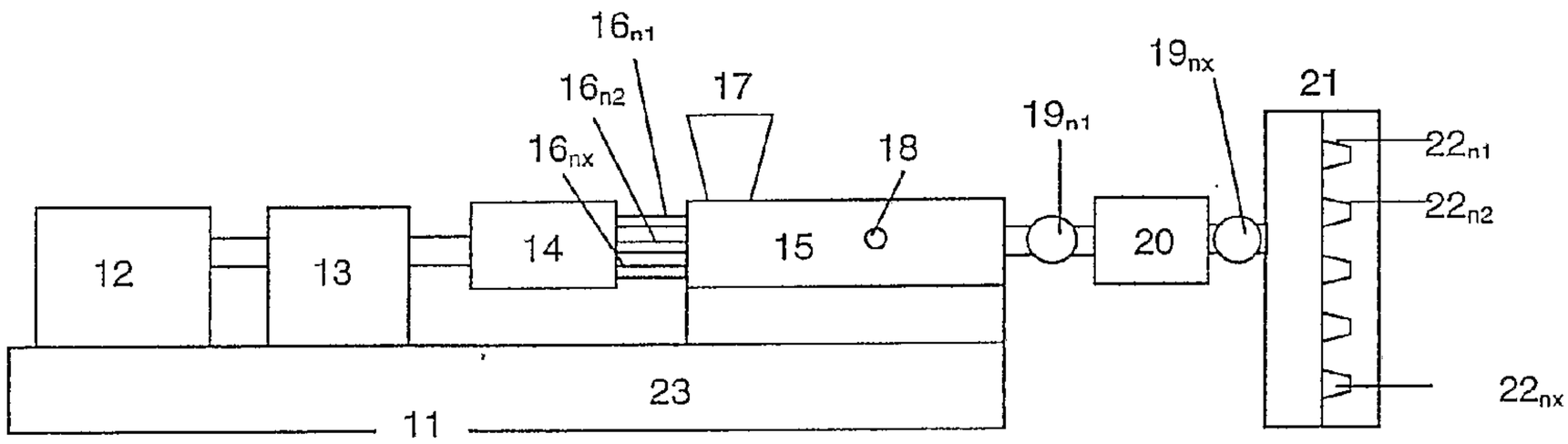

(57) Abstract: The invention relates to a method and installation for carefully producing injection molded parts made of thermoplastic materials at high rates. The invention also relates to a method and installation for carefully producing injection molded parts made of thermoplastic materials while involving the simultaneous homogeneous incorporation of additives or the compounding of plastic mixtures. Finally, the invention relates to an installation that enables the continuously running plasticizing step in a multiple-screw extruder (11; 31) to be economically combined with the intermittently running injection molding process.

(57) Zusammenfassung: Die Erfindung bezieht sich auf ein Verfahren und eine Anlage zur schonenden Herstellung von Spritzgussteilen aus thermoplastischen Kunststoffen bei hohen Durchsätzen. Die Erfindung bezieht sich weiter auf ein Verfahren und eine Anlage zur schonenden Herstellung von Spritzgussteilen aus thermoplastischen Kunststoffen bei gleichzeitiger homogener Einarbeitung von Additiven oder Compoundierung von Kunststoffmischungen. Die Erfindung bezieht sich weiter auf eine Anlage, die es ermöglicht, den kontinuierlich ablaufenden Plastifizierschritt in einem Mehrwellenextruder (11; 31) auf wirtschaftliche Weise mit dem taktweise verlaufenden Spritzgussprozess zu kombinieren.

WO 2005/053931 A1

WO 2005/053931 A1

CO, CR, CU, CZ, DK, DM, DZ, EC, EE, EG, ES, FI, GB, GD, GE, GH, GM, HR, HU, ID, IL, IN, IS, JP, KE, KG, KP, KZ, LC, LK, LR, LS, LT, LU, LV, MA, MD, MG, MK, MN, MW, MX, MZ, NA, NI, NO, NZ, OM, PG, PH, PL, PT, RO, SC, SD, SE, SG, SK, SL, SY, TJ, TM, TN, TR, TT, TZ, UA, UG, UZ, VC, VN, YU, ZA, ZM, ZW, ARIPO Patent (BW, GH, GM, KE, LS, MW, MZ, NA, SD, SL, SZ, TZ, UG, ZM, ZW), eurasisches Patent (AM, AZ, BY, KG, KZ, MD, RU, TJ, TM), europäisches Patent (AT, BE, BG, CH, CY, CZ, DE, DK, EE, ES, FI, FR, GB, GR, HU, IE, IT, LU, MC, NL, PL, PT, RO, SE, SI, SK, TR), OAPI Patent (BF, BJ, CF, CG, CI, CM, GA, GN, GQ, GW, ML, MR, NE, SN, TD, TG)

— *hinsichtlich der Berechtigung des Anmelders, ein Patent zu beantragen und zu erhalten (Regel 4.17 Ziffer ii) für die folgenden Bestimmungsstaaten AE, AG, AL, AM, AT, AU, AZ, BA, BB, BG, BR, BW, BY, BZ, CA, CH, CN, CO, CR, CU, CZ, DK, DM, DZ, EC, EE, EG, ES, FI, GB, GD, GE, GH, GM, HR, HU, ID, IL, IN, IS, JP, KE, KG, KP, KZ, LC, LK, LR, LS, LT, LU, LV, MA, MD, MG, MK, MN, MW, MX, MZ, NA, NI, NO, NZ, OM, PG, PH, PL, PT, RO, SC, SD, SE, SG, SK, SL, SY, TJ, TM, TN, TR, TT, TZ, UA, UG, UZ, VC, VN, YU, ZA, ZM, ZW, ARIPO Patent (BW, GH, GM, KE, LS, MW, MZ, NA, SD, SL, SZ, TZ, UG, ZM, ZW), eurasisches Patent (AM, AZ, BY, KG, KZ, MD, RU, TJ, TM), europäisches Patent (AT, BE, BG, CH, CY, CZ, DE, DK, EE, ES, FI, FR, GB, GR, HU, IE, IT, LU, MC, NL, PL, PT, RO, SE, SI, SK, TR), OAPI Patent (BF, BJ, CF, CG, CI, CM, GA, GN, GQ, GW, ML, MR, NE, SN, TD, TG)*

— *hinsichtlich der Berechtigung des Anmelders, die Priorität einer früheren Anmeldung zu beanspruchen (Regel 4.17 Ziffer iii) für alle Bestimmungsstaaten*

— *Erfindererklärung (Regel 4.17 Ziffer iv) nur für US*

Veröffentlicht:

— *mit internationalem Recherchenbericht*

Zur Erklärung der Zweibuchstaben-Codes und der anderen Abkürzungen wird auf die Erklärungen ("Guidance Notes on Codes and Abbreviations") am Anfang jeder regulären Ausgabe der PCT-Gazette verwiesen.

PCT/CH2004/000644

INJECTION MOLDING METHOD AND INJECTION MOLDING SYSTEM WITH A MULTI-SCREW EXTRUDER, IN PARTICULAR A RING EXTRUDER

The invention relates to a method and system for gently manufacturing injection-molded parts out of thermoplastics at high throughput rates. The invention further relates to a method and a system for gently manufacturing injection-molded parts out of thermoplastics during the simultaneous homogeneous incorporation of additives or compounding of plastic mixtures.

The invention further relates to a system that makes it possible to economically combine the continuous plasticization step in a multi-screw extruder with the discontinuous injection-molding process.

Injection-molding methods involving the use of single-screw extruders are commonly known in prior art. For example, from DE 1142229 and DE 4221423. Increasingly high throughputs require an ever larger screw diameter, which yields very long extruders at a given length-to-diameter ratio, and which no longer permits gentle melting, especially for temperature-sensitive plastics, since the increasingly smaller surface-to-volume ratio must be offset by longer retention times and higher working temperatures. Another disadvantage is that compounding capabilities and degassing capabilities are limited with a single-screw extruder, and that a given screw shank is only optimally designed for a parent material.

The disadvantages described above are eliminated in part through the use of twin-screw extruders, e.g., the independence of throughput from speed enables an adjustment to several material specifications. The compounding capabilities are also improved. Such systems are known, for example, from WO 86/06321, in which a discontinuous extruder is used, or from WO 02/02293 and DE 101 60 810, in which a respective continuous twin-screw extruder is used.

Multi-screw extruders have previously also been used for a variety of purposes.

For example, EP 0 727 303 describes the use of a multi-screw extruder as a post-condensation reactor for melt phase polycondensation, wherein the post-condensed plastic is later subjected to an injection molding process. The retention times for the plastic in the reactor here range from approx. 30 min to approx. 60 min.

EP 0 881 054 describes a method for degassing hydrolysis-sensitive polymers. The polymer melt exiting a multi-screw extruder can here be fed to an injection-molding machine.

WO 02/36317 describes a method for processing a polycondensate in a multi-screw extruder or an annular extruder. The polycondensate is here melted open in the extruder,

and granted after a relatively short retention time of less than 60 seconds in the melt. The granulate can then be fed to the injection-molding process, but must here be melted open again.

The article entitled "Compounding with Twelve Screws; Annular Extruder offers Advantages over the Twin-Screw" by F. Vorgerg, in Kunstoffe, Carl Hanser Verlag, Munchen, Vol. 90, No. 8, August 2000, pp. 60-62 describes the advantages to an annular extruder for compounding and degassing purposes. However, it makes no mention of using such an annular extruder as purely a melting-open machine with a short overall length and at a high throughput with an immediately following injection molding process.

Therefore, the disadvantages described above still remain partially in place during injection molding, and the necessity remains for a plasticizing extruder with further improved compounding capabilities and degassing capabilities as well as shorter retention times and, above all, shorter overall length.

The object of the invention is to eliminate these disadvantages. In particular, the plasticizing extruder is to be distinguished by a high throughput at a low overall length, good mixing and degassing characteristics, gentle treatment and short treatment time.

This object is achieved via the method according to claim 1, as well as via the system according to claim 9, wherein a continuous multi-screw extruder is used with a screw shank arranged on a collar line.

Other embodiments can be gleaned from the description below.

Possible thermoplastics include polycondensates, e.g., polyesters, polyamides, polycarbonates and their copolymers and blends or polyolefins, e.g., polyethylene, polypropylene as well as their copolymers and blends. However, all thermoplastics can basically be used, as long as their rheological and thermal characteristics permit use in an injection molding process.

Polycondensation can involve polyamides, polyesters or polylactides, which are obtained via a polycondensation reaction accompanied by the cleavage of a low-molecular reaction product. In this case, polycondensation can take place directly between the monomers, or via an intermediate stage, which is subsequently converted via transesterification, wherein transesterification can in turn take place accompanied by the cleavage of a low-molecular reaction product or via ring opening polymerization.

The polyamide is here a polymer obtained via polycondensation from its monomers, either a diamine component or a dicarbonic acid component, or a bifunctional monomer with an amine and a carbonic acid end group.

The polyester here involves a polymer obtained via polycondensation from its monomers, a diol component and a dicarbonic acid component. Various, mostly linear or cyclic, diol components are used. Various, mostly aromatic dicarbonic acid components can also be used. The dicarbonic acid can be replaced by its corresponding dimethyl ester. Typical examples for polyester include polyethylene terephthalate (PET), polybutylene terephthalate (PBT) and polyethylene naphthalate (PEN), which are used either as a homopolymer or as copolymers.

The thermoplastics used can be either new or recycled.

Blends or plastic material mixtures can also be used as the thermoplastics.

The method according to the invention is also suitable for incorporating additives. The additives can be added prior to melting, either together with the polycondensate or via a separate metering and feeding device. The additives are here optimally mixed at the same time by the kneading elements during the melting process. The additives can also be added after melting in the extruder. The additives are added by means of a lateral feeding device, for example. Additional kneading or mixing elements can optionally be provided in the extruder to optimally mix the additives. In special cases, the additives can also be added only after the extruder.

Suitable additives include dyes and pigments, UV blockers, processing aids, stabilizers, impact modifiers, chemical and physical foaming agents, fillers like nucleating agents, particles that improve barrier or mechanical properties, reinforcing bodies, such as balls or fibers, along with reactive substances, for example oxygen absorbers, acetaldehyde absorbers or molecular weight-increasing substances, etc.

The additives can be added along or as part of an additive packet. Several additives are used to fabricate the additive packet. In addition, use can be made of a carrier material that allows incorporation of all additives. The additive packet can be present both as a homogenous powder or granulate, or as a simple additive mixture.

The thermoplastic is added to the process in a solid state, normally as a loose material like granulate, powder, agglomerate, flakes or chips. A granulate can here be cylindrical, globular or spherical, for example.

The thermoplastic can be dried prior to entry into the plasticization extruder. Drying can also take place at least in part outside the extruder.

A multi-screw extruder consists at least of a drive, a gearing and a processing section. The gearing is usually divided into a reduction gear and power divider, so that the individual screw shanks can be individually driven. The processing section is the part of the extruder in which the material to be processed is worked or conveyed by the screw shanks.

Filling takes place in an intake area of the processing section, e.g., via one or more intake funnels, through which one or more streams of material can be gravimetrically or volumetrically metered in. The addition of other components, e.g., additives or gases, for example for purposes of foaming, can also take place through openings in the melting area. Openings can also be used for degassing.

The processing section of the multi-screw extruder has numerous (at lest three, normally at least six, preferably at least eight) rotatable processing screws (screw shanks) that are arranged axially parallel to each other on a rim line in a casing, and exert a conveying action at least in partial areas, wherein the processing elements of adjacent screws intermesh tightly at least in part.

The casing has at least one material inlet, and at least one material outlet, as well as notches in the processing area interior walls on either side of the screw shanks that run parallel to each other and the screw shanks, in which the screw shanks are incorporated and guided, thereby defining a first partial processing area and a second partial processing area lying on one or the other side of the barrier formed by the screw shanks running parallel to each other.

In a special embodiment, the multi-screw extruder is a ring extruder in which at least six, in particular twelve, fully enclosed screw shanks are arranged in a rim or ring-like manner, wherein the interior of the screw rim incorporates a core. Such an extruder is described in DE 196 22 582, for example. Other embodiments can also be found in DE 102 11 673 and DE 10211673.

The invention enables high throughput levels:

- Throughputs of up to 800 kg/h can be achieved with a processing section length of the plasticization extruder of less than 1000 mm, in particular less than 650 mm.
- Throughputs of up to 1500 kg/h can be achieved with a processing section length of the plasticization extruder of less than 1250 mm, in particular less than 820 mm.
- Throughputs of up to 2500 kg/h can be achieved with a processing section length of the plasticization extruder of less than 1500 mm, in particular less than 1000 mm.

In a generally valid correlation, throughput number Z can be expressed as a function of the processing section length L and throughput Q as follows:

$Z = Q/L^{\wedge 2.8}$, wherein Q is in [kg/h] and L in [m].

According to the invention, Z is greater than 800, in particular greater than 2750.

The process retention time must be kept as short as possible to gently handle the plastic. While the retention time in the buffer containers is determined by the cycle time, the retention time in the plasticization extruder and melt flow-ways can be optimized. The average retention time of the plasticized plastic in the process from the moment melting begins until the point of injection into the injection molding tool must not exceed 60 seconds plus the cycle time, in particular no more than 30 seconds plus the cycle time. The average retention time of the plasticized plastic in the processing section of the plasticization extruder from the moment melting begins until the point of exit from the processing section must not exceed 15 seconds, in particular 10 seconds.

The processing section can be followed by components for building up pressure, e.g., a melt pump, a melt filter, devices for measuring rheological properties, on-off valves and/or buffer containers.

The plasticized plastic is pressed into an injection molding tool via a melt flow-way. Injection molding tools are sufficiently known from prior art. The injected plastic melt is distributed to one or more cavities via distribution channels, and solidifies in the desired shape.

The plasticized plastic is most preferably first injected into at least one buffer container, and from there into the injection molding tool. The plasticized plastic can be prevented from flowing back into the extruder by means of an on-off valve.

The buffer container is designed in such a way that its volume increases for accommodating the plasticized plastic, and decreases again for ejecting the plasticized plastic, which can be achieved by a movable piston, for example. Ejection normally takes place more quickly than filling the buffer.

In order to ensure the continuous operation of the plasticization extruder while intermittently pressing the plasticized plastic into the injection molding tool, the screw shanks are mounted in an axially shiftable manner in a special embodiment, giving rise to a buffer area in the processing section during an axial shift toward the back. This is achieved either by:

a) screw shanks that can be axially shifted relative to the power divider,
b) screw shanks that can be axially shifted together with the power divider relative to the reduction gear,
c) screw shanks that can be axially shifted together with the power divider and the reduction gear relative to the drive,
d) screw shanks that can be axially shifted together with the power divider, reduction gear and drive,
e) a processing section casing that can be axially shifted relative to the screw shanks,
f) the core inside the screw shank rim of a ring extruder can be axially shifted relative to the screw shanks.

Fig. 2 shows variant b), in which the axial shift is absorbed in the reduction gear, which is rigidly secured to the frame.

Continuous operation can also be ensured by a second buffer container arranged between the plasticization extruder and the first buffer container.

Another possibility would be to use a downstream tandem extruder with an axially shiftable screw shank..

It is also conceivable to make the center screw described in DE 10211673 axially shiftable.

In another embodiment of the invention, the system has at least one on-off valve and at least two buffer containers, wherein the plasticized plastic is variably pressed into the buffer container via the on-off valve and either

a) pressed into an allocated injection molding tool from a respective buffer container, or
b) pressed into a single injection molding tool from the at least two buffer containers via another on-off valve.

Fig. 3 shows variant a), in which two separate injection molding tools are used.

If an injection molded part is to be fabricated out of several layers of material, several plasticization extruders can be used, wherein at least the one with the higher throughput must satisfy the requirement according to the invention. The several layers of material can here be generated simultaneously or consecutively.

One embodiment of the method provides for the manufacture of parisons for hollow items, in particular beverage bottles. In this case, for example, a polyethylene terephthalate or one of its copolymers is first preliminarily dried and then melted in a ring extruder, after which it is pressed into a plurality of cavities of at least one injection molding tool. Drying can also take place inside the extruder via degassing both before and after melting, making it possible to achieve tangible energy savings compared to conventional methods of today.

The method according to the invention can be executed by means of a co-rotating multi-screw extruder, whose processing area has a jacket surface Am and a free volume Vf, wherein the screw elements have an outer diameter Da at the screw thread, and an inner diameter Di at the screw base, and wherein at least part of the process zone has an Am^3/Vf^2 ratio $\geq$ 1020 for two-start screw elements, and an $Am^3/Vf^2 \geq 2000$ for three-start screw elements given a Da/Di ratio = 1.3 to 1.7.

The method according to the invention can also be performed using a co-rotating multi-screw extruder, whose processing area has an intermeshing zone Az and a free volume Vf, wherein the screw elements have an outer diameter Da at the screw thread, and an inner diameter Da at the screw base, and wherein at least part of the process zone has an Az^3/Vf^2 ratio $\geq 5x10^{-1}$ for two-start screw elements, and an Az^3/Vf^2 ratio $\geq 2x10^{-2}$ for three-start screw elements given a Da/Di ratio = 1.3 to 1.7.

In this case, a torque density (torque per screw/axial distance^3) of at least 7 Nm/cm^3, in particular of at least 9 Nm/cm^3, is preferably introduced in the extruder.

It is particularly advantageous if the Da/Di ratio = 1.5 to 1.63, and if the Az^3/Vf^2 ratio $\geq$ 1500 for two-start screw elements and the Az^3/Vf^2 ratio $\geq$ 3000 for three start screw elements.

Additional advantages, features and possible applications of the invention can be gleaned from the following description of embodiments according to the invention based on the drawing, wherein:

Fig. 1 is a side view of a ring extruder from prior art along a plane perpendicular to the conveying or longitudinal direction of the extruder;

Fig. 2 is a side view of a first embodiment of the system according to the invention;

Fig. 3 is a top view of a second embodiment of the system according to the invention.

Fig. 1 is a side view of a ring extruder from prior art along a plane perpendicular to he conveying or longitudinal direction of the extruder. In this case, the ring extruder consists of twelve fully-enclosed screw shanks that are arranged in a rim-like manner and run parallel to the longitudinal or conveying direction of the extruder, and are comprised of carrier screws 5 and processing elements 6, which exert a conveying effect at least in partial areas. The twelve fully-enclosed screw shanks 5, 6 arranged in a rim-like manner are situated in such a way that the processing elements 6 of adjacent screws intermesh tightly at least in part, and that the outer processing area 1 of the ring extruder is separated from the inner processing area 2 of the ring extruder at least in partial areas. The screws 5 arranged in a rim-like manner are mounted between a casing 3 and a core 4 fixed relative to the casing. The surface of the casing 3 facing the screw rim looks like a so-called external flower 7 in cross section. The surface of the core 4 facing the screw rim resembles a so-called internal flower 8 in cross section.

Fig. 2 shows a side view of a multi-screw extruder 11 with a drive 12, a reduction gear 13, a power divider 14 and a processing section 15. The individual screw shanks 16_{n1} to 16_{nx} are individually driven via the gear. Filling takes place by way of

an intake funnel 17. Additional components can be added through openings in the melting area 18.

The processing section is followed by two on-off valves 19_{n1} to 19_{n2} and a buffer container 20, wherein the stream of plastic is controlled via the on-off valves as the buffer container is filled and evacuated. A melt line is used to press the plasticized plastic into an injection-molding tool 21, and distribute it to several cavities 22_{n1} to 22_{nx} through distribution channels. Injection-molding tools are sufficiently known in prior art. The injected plastic melt is cooled, and solidifies in the desired shape.

With the on-off valve 19_{n1} closed, a buffer area must be generated inside the extruder by moving the screw shanks toward the back. To this end, the power divider is rigidly connected with the screw shanks, and moves relative to the reduction gear, which is rigidly secured to the frame 23.

Fig. 3 shows a top view of a multi-screw extruder 31 with a drive 32, a reduction gear 33, a power divider 34 and a processing section 35. The gearing separately drives the individual screw shanks 36_{n1} to 36_{nx}. Filling takes place via an intake funnel 37.

The processing section is followed by an on-off valve 39_{n1}, which can alternately route the plasticized plastic to one of the two buffer containers 4, 42. Shown as a constituent of each buffer container is a respective piston 41, 43, which can be used to increase and decrease the buffer container volume. The on-off valves 39_{n2}, 39_{n3} can be used to regulate the flow of plastic while filling and evacuating the buffer container 40, 42.. The plasticized plastic is pressed into the respective accompanying injection-molding tool 44, 46 via a melt line, and distributed to several cavities 45_{n1} to 45_{nx} or 47_{n1} to 47_{nx} via distribution channels.

Reference Marks

1	Outer processing area	22_{n1}-22_{nx}	Cavities
2	Inner processing area	23	Frame
3	Casing	31	Multi-screw extruder
4	Core	32	Drive
5	Supporting screws	33	Reduction gear
6	Processing elements	34	Power divider
7	External flower	35	Processing section
8	Internal flower	36_{n1}-36_{nx}	Screw shanks
11	Multi-screw extruder	37	Intake funnel
12	Drive	39_{n1}-39_{n3}	On-off valves
13	Reduction drive	40	Buffer container
14	Power divider	41	Piston
15	Processing section	42	Buffer container
16_{n1}-16_{nx}	Screw shanks	43	Piston
17	Intake funnel	44	Injection molding tool
18	Melting area	45_{n1}-45_{nx}	Cavities
19_{n1}-19_{n2}	On-off valves	46	Injection molding tool
20	Buffer container	47_{n1}-47_{nx}	Cavities
21	Injection molding tool		

CLAIMS

1. A method for manufacturing injection-molded articles out of thermoplastics, comprised of

a) a step for plasticizing the plastic via a multi-screw extruder,
b) a step for press-molding the plasticized plastic into at least one mold,

characterized in that the plastic is plasticized in a continuous multi-screw extruder having at least three screw shanks that tightly intermesh at least in partial areas and are situated on a collar line, in particular an annular extruder having at least six screw shanks that tightly intermesh at least in partial areas and are arranged in a collar, and that the plasticizing extruder (11; 31) has a throughput characteristic Z greater than 800, in particular greater than 2750, wherein $Z = Q/L^{\wedge 2.8}$ is computed with the throughput Q in [kg/h] and the length L in [m].

2. The method according to claim 1, characterized in that the thermoplastic is a polycondensate, in particular a polyester.

3. The method according to one of the preceding claims, characterized in that the polycondensate is dried before plasticized.

4. The method according to one of the preceding claims, characterized in that the quantity of plasticized plastic measures more than 800 kg/h, in particular more than 1000 kg/h.

5. The method according to one of the preceding claims, characterized in that the plasticized plastic passes through one or more of the following steps:

a) degassing;
b) mixing with additives;
c) filtering;
d) increasing of pressure via a melt pump;

e) determining of rheological properties;
f) buffering in at least one buffer container, so that plasticizing can be continuous, and press-molding in a mold can take place discontinuously.

6. The method according to one of the preceding claims, characterized in that the plasticized plastic, is fed alternatively to one of at least two buffer containers by way of a control valve, and either:

a) is press-molded in an injection molding tool allocated to the respective buffer container; or
b) is press-molded in a single injection molding tool via an additional control valve.

7. The method according to one of the preceding claims, characterized in that the average retention time of the plasticized plastic in the process does not exceed 60 seconds plus the cycle time, in particular 30 seconds plus the cycle time, and/or the average retention time of the plasticized plastic is not to exceed 15 seconds in the processing section of the plasticizing extruder, in particular not to exceed 10 seconds.

8. The method according to one of the preceding claims, characterized in that the plasticized plastic is press-molded in numerous cavities of an injection molding tool in order to manufacture a plurality of hollow items, in particular parisons from food packagings like beverage bottles, out of a thermoplastic, e.g., a polyester.

9. A system for manufacturing injection-molded articles out of thermoplastics, which consists at least of a multi-screw extruder as the plasticizing extruder (11; 31) and at least one injection-molding tool (21; 44, 46), characterized in that the plasticizing extruder is a continuous multi-screw extrude with at least three screw shanks that tightly intermesh in at least partial areas and are situated on a collar line (16_{n1}-16_{nX}; 36_{n1}-36_{nx}), and that the plasticizing extruder

(11; 31) has a throughput characteristic Z exceeding 800, in particular exceeding 2750, wherein $Z = Q/L^{\wedge 2.8}$ is computed with the throughput Q in [kg/h] and the length L in [m].

10. The system according to claim 9, characterized in that the multi-screw extruder (11; 31) is an annular extruder with self-contained screw shanks arranged in a collar.

11. The system according to claim 9 or 10, characterized in that the plasticizing extruder (11; 31) has at least one drive (12), a reduction gear (13), a power divider (14) and a process section (15), wherein the process section consist of one or more of the following components:

a) one or more material inlet holes;
b) one or more metering devices connected with a material inlet hole;
c) one or more outlet holes;
d) one or more vacuum stations connected with an outlet hole;

and a melt path is arranged between the plasticizing extruder (11; 31) at the at least one injection molding tool (21; 44, 46), wherein the melt path can have one or more of the following components:

e) a melt pump;
f) one or more measuring devices for acquiring rheological data;
g) one or more melt filters;
h) one or more buffer containers;
i) one or more control valves.

12. The system according to one of claims 9 to 11, characterized in that the melt path has at least one control valve (39_{n1}) and at least two buffer containers (40, 42), wherein the control valve establishes a respective connection between the plasticizing extruder (31) and a buffer container (40, 42), and either

a) a respective buffer container is connected with an allocated injection molding tool (44, 46), or
b) the at least two buffer containers are connected with a single injection molding tool by way of an additional control valve.

13. The system according to one of claims 9 to 12, characterized in that the screw shafts (16_{n1}-16_{nx}; 36_{n1}-36_{nx}) are axially shiftable, thereby creating a buffer area in the process section during an axial shift toward the back, wherein either

a) the screw shanks shift axially relative to the power divider (14); or
b) the screw shanks shift axially along with the power divider (14) relative to the reduction gear (13); or
c) the screw shanks shift axially along with the power divider (14) and the reduction gear (13) relative to the drive (12); or
d) the screw shanks shift axially along with the power divider (14), the reduction gear (13) and the drive (12); or
e) the casing of the process section shifts axially relative to the screw shanks; or
f) the core inside the screw shank collar of an annular extruder can be axially shifted relative to the screw shanks.

14. The system according to one of claims 9 to 13, characterized in that the injection-molding tool (21; 44, 46) has several cavities (22_{n1} 22_{nx}; 45_{n1}-45_{nx}, 47_{n1}-47_{nx}) to manufacture parisons of foodstuff packagings, in particular beverage bottles.

Fig. 1

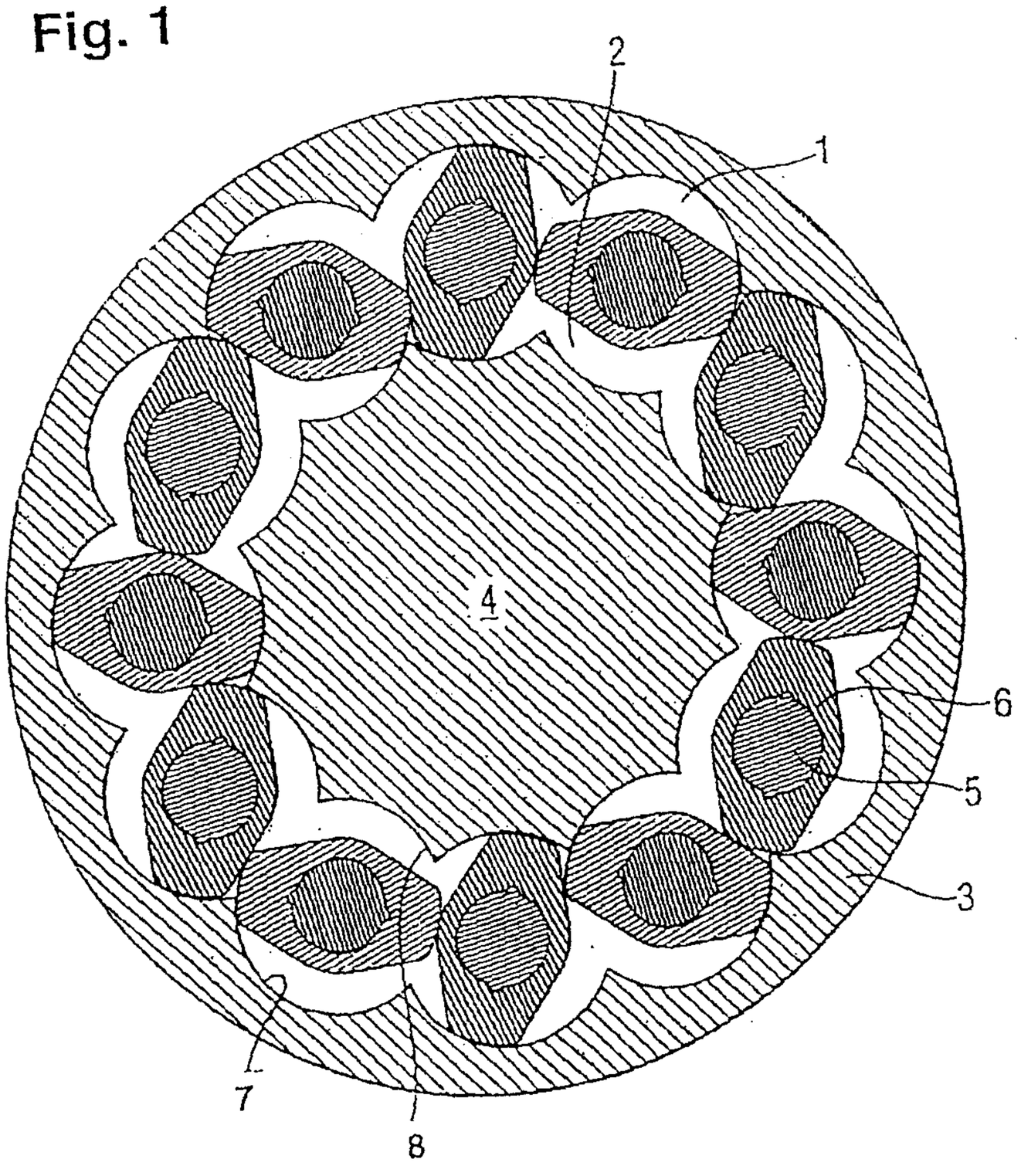

Fig. 2

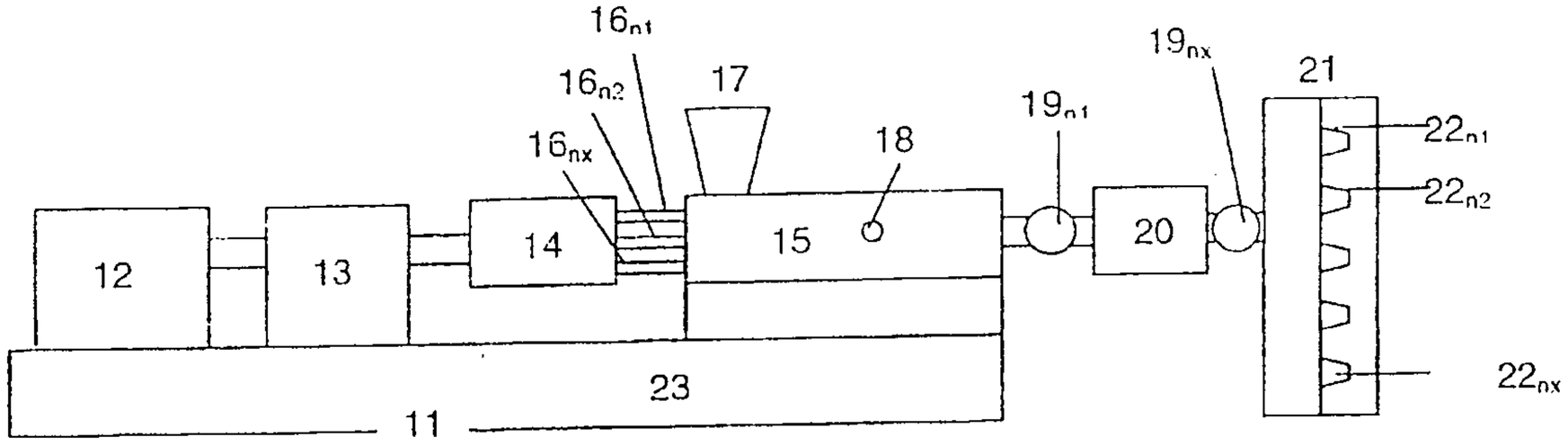
16_{n1}
16_{n2}
16_{nx}
17
18
19_{n1}
19_{nx}
21
22_{n1}
22_{n2}
22_{nx}
12
13
14
15
20
23
11

Fig. 3

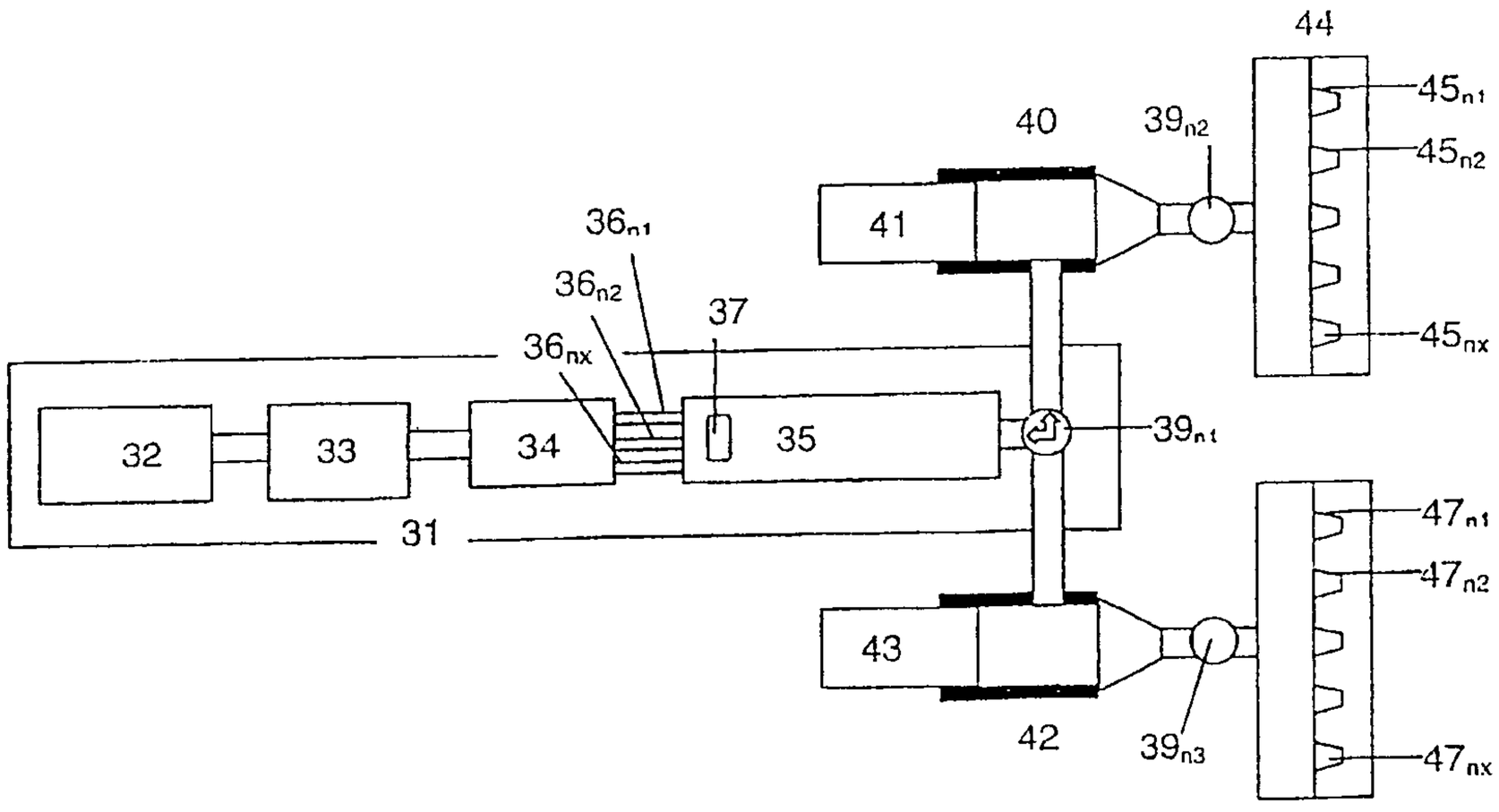
44
45_{n1}
45_{n2}
45_{nx}
40
39_{n2}
41
36_{n1}
36_{n2}
36_{nx}
37
32
33
34
35
39_{n1}
31
47_{n1}
47_{n2}
43
42
39_{n3}
47_{nx}

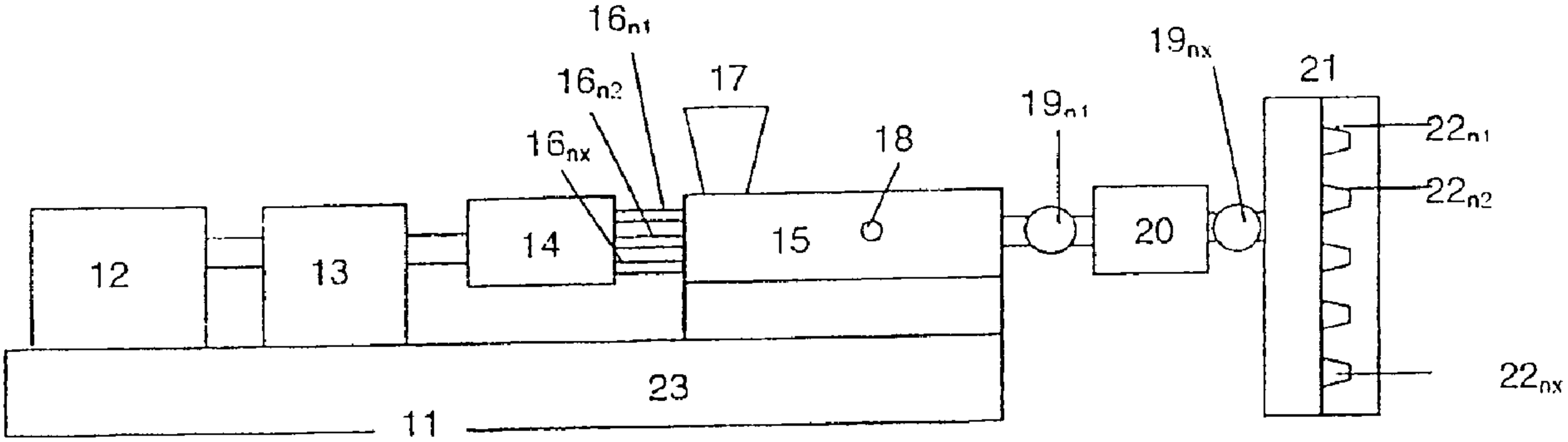
16n1
16n2
16nx
17
18
19n1
19nx
21
22n1
22n2
22nx
12
13
14
15
20
23
11