May 23, 1950 T. B. CHACE 2,508,492

DRINK DISPENSING DEVICE

Filed Dec. 14, 1942 2 Sheets-Sheet 1

Fig. 1.

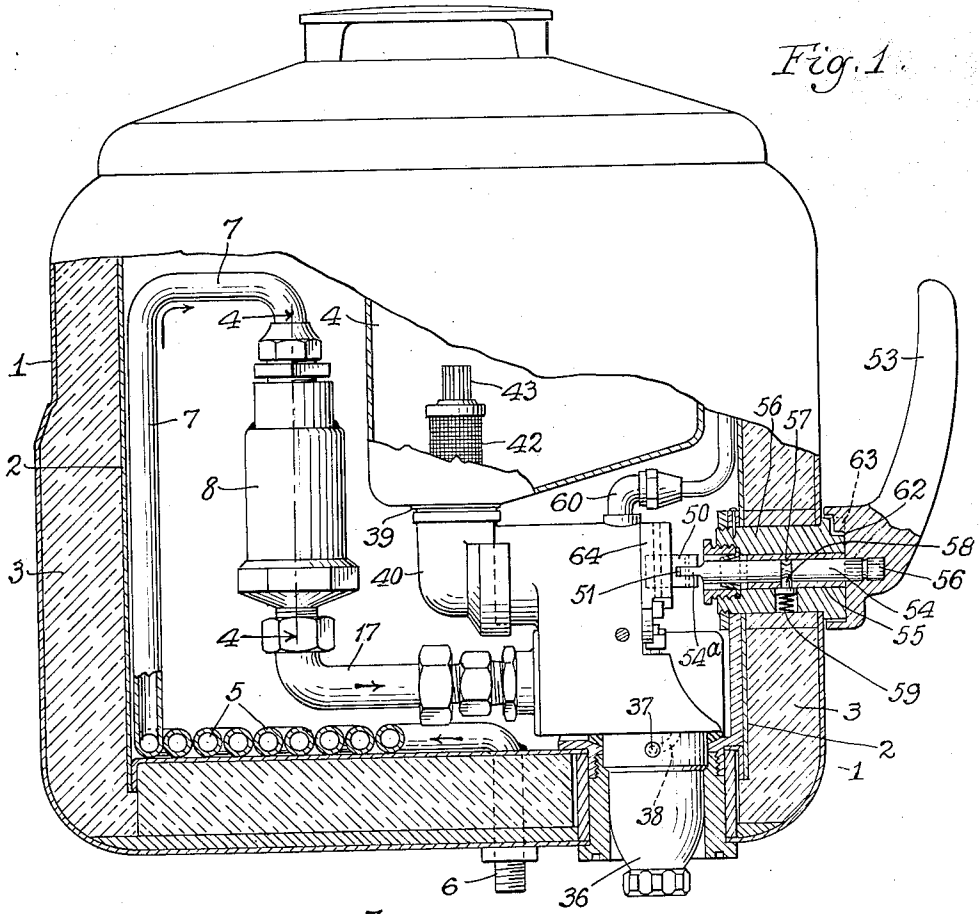

Fig. 4.

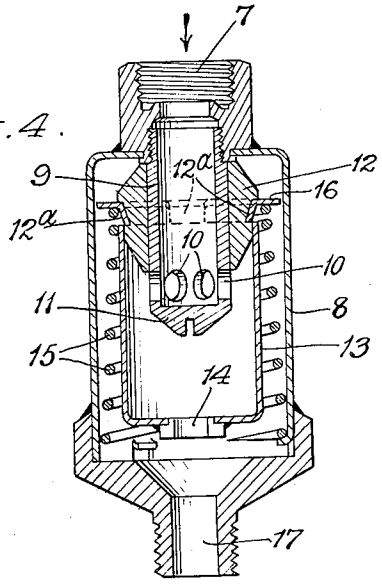

Inventor
Thomas P. Chace
by Parker & Carter
Attorneys.

May 23, 1950 T. B. CHACE 2,508,492

DRINK DISPENSING DEVICE

Filed Dec. 14, 1942 2 Sheets-Sheet 2

Fig. 3.

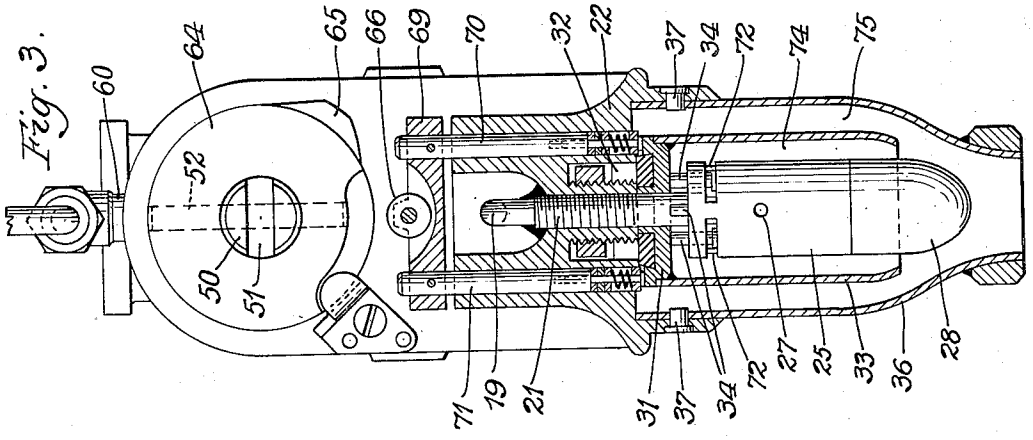

Fig. 2.

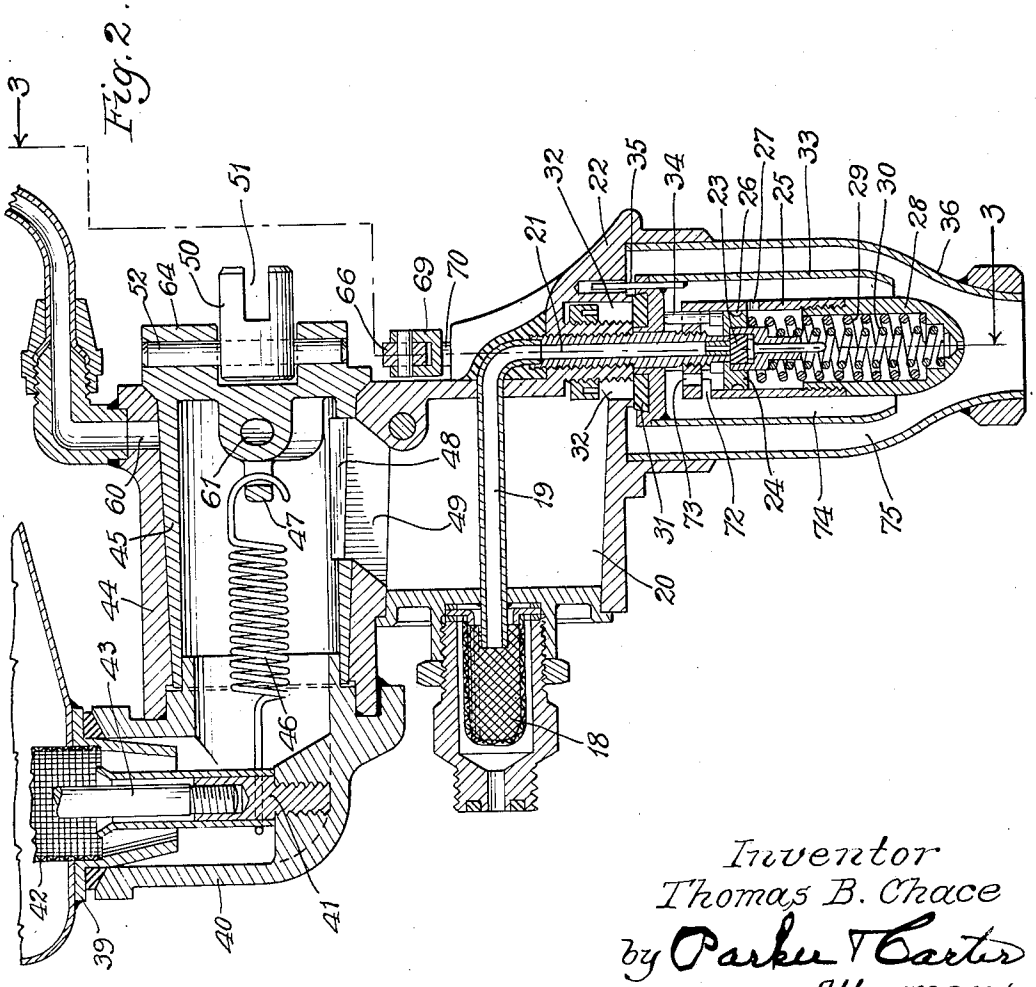

Inventor
Thomas B. Chace
by Parker & Carter
Attorneys.

Patented May 23, 1950 2,508,492

UNITED STATES PATENT OFFICE

2,508,492

DRINK DISPENSING DEVICE

Thomas B. Chace, Winnetka, Ill., assignor to The Dole Valve Company, Chicago, Ill., a corporation of Illinois

Application December 14, 1942, Serial No. 468,887

5 Claims. (Cl. 225—21)

1

This invention relates to drink dispensing devices and has for its object to provide a new and improved device of this description.

The invention has as a further object to provide a drink dispensing device arranged to provide a continuous flow of a carbonated drink.

The invention has as a further object to provide a drink dispensing device having means for accurately proportioning the syrup to the carbonated water.

The invention has as a further object to maintain a high volume of carbonation in the drink after it is dispensed.

Carbonated drinks are dependent for their proper taste upon a very accurate proportioning of the syrup to the carbonated water. With the present dispensing devices, therefore, and the way they are operated, it is not possible to maintain this accurate proportioning of the syrup to the carbonated water. Any variation in the size of the glass, for example, or in the extent to which the glass is filled results in a variation in the relative proportion of the syrup and the carbonated water and, therefore, adversely affects the taste of the drink. One of the objects of the present invention is to provide a device by means of which this proper relative proportion between the syrup and the carbonated water will be maintained.

One of the problems in the present dispensing devices which interferes with the proper proportioning of the syrup to the carbonated water is that the pressure of the carbonated water supply varies to a very large extent, the variation being sometimes as great as from 90 pounds to 150 pounds on the standard soda fountain equipment. With a fixed orifice opening for the carbonated water, it will be seen that the proportion of carbonated water to the syrup will vary directly with the pressure as the syrup is fed at all times by gravity. One of the objects of the present device is to provide a device by means of which the proper proportion of the syrup to the carbonated water will not be interfered with by the difference in pressure of the carbonated water supply.

The invention has further objects which are more particularly pointed out in the accompanying description.

Referring now to the drawings,

Fig. 1 is a side elevation with parts broken away showing one form of drink dispensing device embodying the invention;

Fig. 2 is an enlarged sectional view showing

2

the syrup and carbonated water passageways, valves and associated parts;

Fig. 3 is a sectional view taken on line 3—3 of Fig. 2;

Fig. 4 is an enlarged sectional view taken on line 4—4 of Fig. 1.

The invention may be used with any suitable dispensing device. For purposes of illustration, I have shown it in connection with a dispensing device of the type shown in application Serial Number 406,747, filed August 14, 1941, now Patent No. 2,349,441, issued May 23, 1944.

Like numerals refer to like parts throughout the several figures.

I have illustrated in the drawing one form of device embodying the invention. In this construction there is provided a receptacle comprising an outer casing 1 and an inner casing 2. Heat insulating material 3 is placed between these two casings. Within the inner casing is a syrup tank 4 containing the syrup of whatever flavor it is desired to use. Cooling material is placed within this inner casing and may consist of ice.

There is a coil 5 through which the carbonated water passes on its way to the nozzle and wherein it is cooled by the cooling material in the inner casing 2. This coil is connected by a connection 6 to the source of carbonated water. The coil 5 is connected by a pipe 7 to a flow control valve device enclosed in a casing 8. This flow control valve device is arranged to automatically deliver the same amount of carbonated water to the discharge nozzle in any given interval of time regardless of the variations in pressure of the entering carbonated water.

The casing 8 is supported in any desired manner. Within this casing is a tube 9 fixed in position and, as herein shown, it is connected with the source of carbonated water by means of the pipe connection 7 and coil 5. The tube 9 is provided with one or more discharge openings 10 and preferably has a closed end 11. Some means is provided for automatically varying the effective size of the discharge opening or openings 10 responsive to variations in the pressure of the carbonated water. This result is secured by providing a tube 12 slidably surrounding the tube 9. The tube 12 is connected with a movable water receptacle 13 which has an outlet 14. A spring 15 engages a fixed part in the casing 8 at one end and the water receptacle 13 at the other end, there being preferably a laterally extending part or parts 16 on the receptacle 13 which is engaged by the spring.

The receptacle 13 is connected to the tube 12 by the projections 12a which are preferably bent into a groove in the part 12 and is held in position in any desired manner as by projections 12a engaging shoulders on the tube 12. The pressure of the carbonated water passing through openings 10 into the receptacle 13 causes said receptacle to move and move the tube to partially close the openings 10 and limit the flow of carbonated water. As the pressure decreases the spring moves the tube 12 to enlarge the effective area of the opening. These parts are so adjusted that as the pressure varies, the effective sizes of the openings 10 are varied by the tube 12 so that the same amount of water passes therethrough in any given period of time, the amount of water being wholly independent of the variations in pressure.

The casing 8 is provided with a suitable outlet 17 through which carbonated water passes through a filtering device 18 and which is connected with pipe 7 and pipe 19. This pipe 19 passes through the syrup chamber 20 and connects with a downwardly projecting pipe 21 which is supported upon the main frame 22 by a screw threaded connection therewith. The end of the pipe 21 is normally closed by a valve 23 attached to a piston 24 sliding in a cylinder 25. The piston 24 has a groove 26 to retain liquid which may attempt to get past the piston when the piston is moved down. This liquid is discharged through the opening 27.

The cylinder 25 has removably attached thereto a hollow end piece 28. Springs 29 and 30 engage the end piece 28 at the lower end and are arranged to exert an upward pressure on the piston 24 so as to maintain the valve 23 closed against the end of the pipe 21.

A valve 31 normally closes the discharge passageway 32 of the syrup chamber 20. This valve is connected with a cylindrical member 33 which extends down along the cylinder 25 to a point near the end of the end piece 28. A series of supporting members 34 connect with the piston 24 and engage the valve 31. The springs 29 and 30 exert sufficient pressure upon the piston 24 to cause the supporting members 34 to hold the valve 31 in its closed position. A pin 35 slides into an opening in the frame 22 and prevents the rotation of the valve 31 and the member 33.

There is an outer nozzle member 36 which is removably fastened to the frame 22 in any desired manner, as by means of bayonet joints. The frame 22 is provided with one or more bayonet lock pins 37. The nozzle member 36 is provided with bayonet slots 38. The outer nozzle member 36 is placed in position by moving it up until the bayonet lock pins enter the upper parts of the slots and then partially rotating it.

The syrup tank 4 contains a syrup which is to be mixed with the carbonated water and is provided with a discharge member 39 which projects into the hollow of the angle syrup conducting member 40. The syrup tank is fastened to the member 44 by means of a holding member 41 which preferably has a threaded connection with the member 40. A strainer 42 is associated with the discharge opening from the syrup container. A fastening device 43 has a threaded connection with the member 41 and extends up through the strainer 42.

The member 40 is connected to the syrup controlling device, which consists of an outer cylinder 44 within which is rockably mounted an inner conical shaped cylinder 45. A spring 46 is connected with the part 41 at one end and removably connected to the part 47 at the other end. The cylinder 45 is provided with a discharge opening 48. When the cylinder is rocked, the discharge opening 48 may be brought into register with an opening 49 so that the syrup may be discharged into the syrup container 20.

The cylinder 45 is provided with a connecting member 50 which is provided with a slot 51. The connecting member 50 is removably connected to the cylinder 45 by a pin 52. The handle 53 has a connecting member 54 attached thereto which has a portion 54a which enters the slot 51 in the member 50. The member 54 is connected with the handle in any desired manner. As herein shown, the member 54 has a knurled end 56 which is driven into the handle 53. This member 54 passes through a sleeve 55 on the interior of the bushing 56. The connecting member 54 is provided with a groove 57 and there is a pin 58 which projects into this groove and which is held normally therein by the spring 59. This permits the connecting member 54 on the handle to be rocked to rock the cylinder 45 to connect and disconnect the openings 48 and 49. When these openings are connected, an air inlet passageway 60 is connected with a passageway 61, forming a part of the cylinder 45, and the passageway 61 is connected with the syrup chamber 20 so that air can pass out to permit syrup to enter the syrup chamber 20.

The handle 53 is provided with means for limiting its rocking movement when the openings 46 and 48 are in register. This is accomplished by means of a projection 63 on the handle which strikes a limiting stop.

The discharge of the syrup from the chamber 20 is controlled by the valve 31. The discharge of the carbonated water from the pipe 21 is controlled by the valve 23 and means is provided for simultaneously opening these valves by means of the handle 53. There is a controlling member 64 rocked by the handle, which has a projection 65 thereon. When the handle is rocked, this projection engages a part 66 on a member 69 to which is attached the pins 70 and 71 (see Fig. 3). These members 70 and 71, when the handle is rocked, are moved downwardly. They engage the syrup discharge valve 31 so as to move it to discharge syrup from the chamber 20. The movement of the syrup discharge valve 31 moves the pins 34 and this movement of these pins moves the piston 24 and the discharge valve 23 for discharging the carbonated water to its open position so that carbonated water and syrup are thus released simultaneously.

The carbonated water escaping, because of the opening of the valve 23, surges up through the openings 72 and 73 and passes down through the space 74 between the nozzle members consisting of the cylinders 25 and 33. The syrup passes down through the space 75 and the syrup and the carbonated water meet and pass out of the nozzle into the glass or other receptacle, thus forming the charged drink.

When the handle is released or moved back to its initial position, the springs 29 and 30 move the valves back to their closed positions.

Since the flow control device in the casing 8 causes the discharge of the same amount of carbonated water in any given interval of time and since the syrup discharged through the discharge opening 32 is not under pressure, this discharge opening 32 is so proportioned as to discharge the same amount of syrup in any given interval of

time and this amount is such that the amount of carbonated water and the amount of syrup will have the proper relative proportions to secure the proper carbonated drink. It will further be seen that this result is secured regardless of the size of the drinking glass or the amount of combined carbonated water and syrup discharged into it.

It will further be seen that there is here provided a dispensing device by means of which there can be provided a continuous flow of a carbonated drink which will always be the same and have the same proportion of syrup and carbonated water.

I have found that by means of this invention there is maintained a high volume of carbonation in the drink after it is dispensed. I have also found that by means of this invention, there is appreciably less loss of carbonation in the drink after it is dispensed and that less foam is created in the drink.

The use and operation of my invention are as follows:

Syrup is placed in the syrup tank **4** and the flow controlling device **8** is connected with a source of carbonated water. Cooling material is placed on the inside of the casing.

When it is desired to dispense a drink the handle **53** is moved. This movement of the handle first moves the cylinder **45** so as to bring the openings **48** and **49** into register to permit the syrup to pass into the chamber **20**. This movement of the handle also causes the controlling device **64** to move so that the projection **65** engages the part **66** and moves the actuating members **70** and **71** so as to move the syrup discharge valve **31** to its open position to permit the escape of the syrup. This syrup then passes down along the space **75** between the nozzle members **33** and **36**. At the same time the downward movement of the valve **31** through the agency of the members **71** causes the piston **24** and the charged water valve **23** to be moved downward so as to open the charged water valve **23** and permit the escape of the charged water, which being under pressure, surges up through the openings **72** and **73** and passes down through the space **74** between the nozzle members **25** and **33**. The charged water and the syrup then pass out of the nozzle into the receptacle so as to form the charged drink. By means of the flow controlling device **8**, the proper proportion between the syrup and the charged water is at all times maintained independent of the variations in pressure of the carbonated water.

The movement of the handle is stopped when these openings are in register and when in this position, the passageway **61** of the member **45** has one end connected with the pipe **60** and the other end with the syrup chamber **20** so that air may pass into the syrup chamber to permit the proper discharge of the syrup through the open valve **31**.

I claim:

1. A drink dispensing device comprising a casing including a pipe adapted to be connected to a source of carbonated water, an automatic flow regulating valve connected to said pipe including an orifice whose area is inversely responsive to pressure so as to discharge carbonated water at a constant flow rate irrespective of pressure fluctuations of said source, a syrup container supported in said casing, discharge valve means connected to the outlets of said valve and of said syrup container for maintaining said syrup and carbonated water at a predetermined constant relative proportion irrespective of said pressure fluctuations in the carbonated water source.

2. A drink dispensing device comprising a casing including a pipe having a connection adapted to be connected to a source of carbonated water, an automatic pressure regulating valve connected to said pipe comprising variable orifice means including a fixed element and a movable element slidable with respect to said fixed element, spring means biasing said movable element in a direction tending to close said orifice means, the carbonated water pressure in said valve biasing said movable element in an opposite direction tending to open said orifice means, thereby discharging carbonated water at a constant pressure and flow rate irrespective of pressure fluctuations of said source, a syrup container supported in said casing, an outlet valve connected to said syrup container, a second outlet valve connected to the discharge end of said pressure regulating valve, and operating means for simultaneously opening and closing said outlet valves so as to maintain a constant ratio of syrup to carbonated water in the mixed drink drawn off irrespective of said pressure fluctuations of said source.

3. A drink dispensing device comprising a casing including a pipe adapted to be connected to a source of carbonated water, an automatic flow regulating valve comprising a valve casing containing a fixed tube having an opening, a movable tube surrounding and slidable with respect to said fixed tube to vary the cross-sectional area of said opening, a movable water receptacle connected with said movable tube and with which said opening communicates, an outlet for said valve casing communicating with a discharge opening in said water receptacle, a spring surrounding said water receptacle having one end engaging a part of said movable tube and the other end engaging a part of the casing, said flow regulating valve thereby discharging a constant flow rate of carbonated water, a syrup container, and discharge valve means connected to the discharge end of said regulating valve and to said syrup container for simultaneously discharging mixed syrup and carbonated water at a constant relative proportion irrespective of said pressure fluctuations in said carbonated water source.

4. The combination with a liquid dispensing apparatus of the class wherein there is a supply of carbonated fluid, a liquid container, and a discharge valve means connected to outlets of said supply and said container for maintaining a constant ratio of liquid to carbonated fluid in a liquid mixture, of an automatic flow regulating valve which acts upon the supply of carbonated fluid so as to discharge the carbonated fluid at a constant flow rate irrespective of pressure fluctuations of said supply of carbonated fluid, said flow regulating valve including spring loaded fluid receiving elements movable relative to each other in response to variations in pressure of said supply of carbonated fluid to control the flow of fluid between the elements and to said discharge valve means.

5. In a liquid dispensing apparatus of the type wherein there is a supply of fluid under pressure, a liquid container, and a discharge valve means connected to outlets of said supply and said container for maintaining a constant ratio of liquid to said fluid to provide a predetermined liquid mixture, an automatic flow regulating valve comprising a valve casing containing a fixed tube having an opening connected to said fluid supply, a movable tube surrounding and slidable with respect to said fixed tube to vary the effective cross-sectional area of said opening, a movable

fluid pressure receptacle connected with said movable tube and with which said opening communicates, an outlet for said valve casing communicating with the discharge opening in said receptacle and with said discharge valve, and spring means surrounding said receptacle having one end engaging a part of said movable tube and the other end engaging a part of the casing, said flow regulating valve discharging a constant flow rate of fluid under pressure to said discharge valve means irrespective of the pressure variation in supply of fluid under pressure.

THOMAS B. CHACE.

REFERENCES CITED

The following references are of record in the file of this patent:

UNITED STATES PATENTS

Number	Name	Date
1,212,186	Cornish	Jan. 16, 1917
2,069,022	Sisk	Jan. 26, 1937
2,243,675	Koenig	May 27, 1941
2,349,441	Lund	May 23, 1944