J. B. BROOKS.

ELECTRIC LOCK STRIKE.

APPLICATION FILED FEB. 1, 1918.

1,274,381.

Patented Aug. 6, 1918.

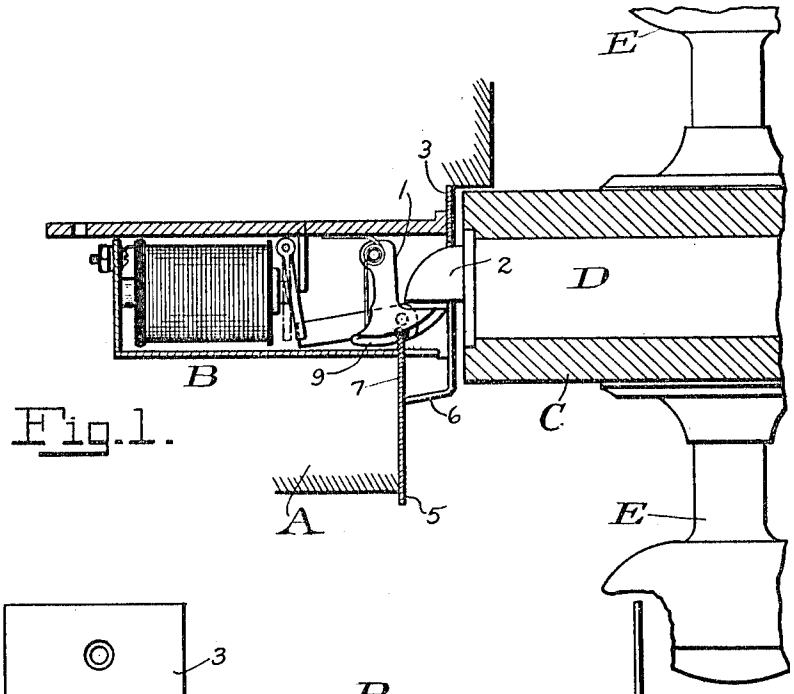

Fig. 1.

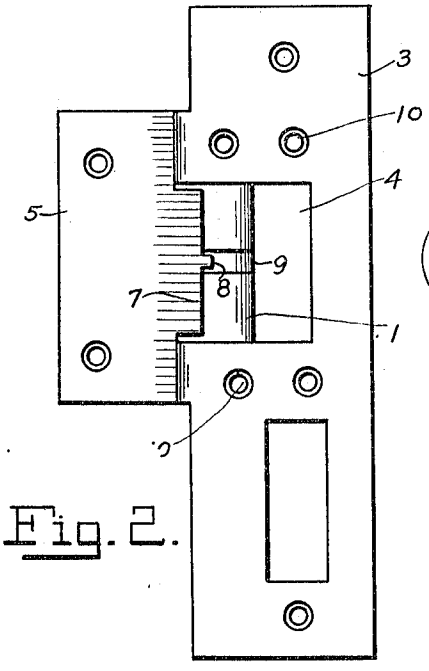

Fig. 2.

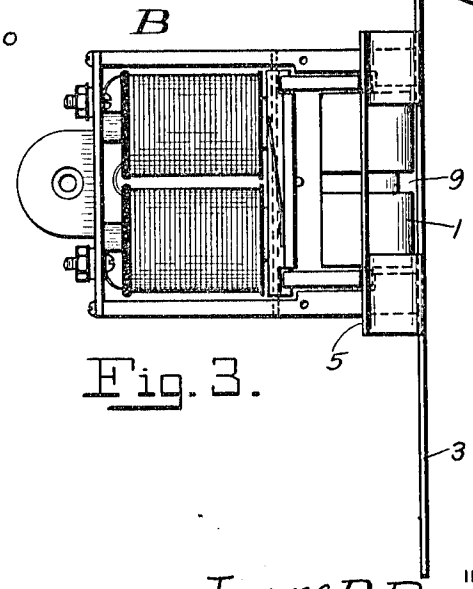

Fig. 3.

INVENTOR

Jerome B. Brooks

WITNESSES

J. W. Bowen.

U. B. Hillyard.

BY Richard B. Owen.

ATTORNEY

THE NORRIS PETERS CO., PHOTO-LITHO., WASHINGTON, D. C.

UNITED STATES PATENT OFFICE.

JEROME B. BROOKS, OF SYRACUSE, NEW YORK.

ELECTRIC LOCK-STRIKE.

1,274,381. Specification of Letters Patent. Patented Aug. 6, 1918.

Application filed February 1, 1918. Serial No. 214,934.

To all whom it may concern:

Be it known that I, JEROME B. BROOKS, citizen of the United States, residing at Syracuse, in the county of Onondaga and State of New York, have invented certain new and useful Improvements in Electric Lock-Strikes, of which the following is a specification.

The invention has relation to door securing means embodying an electrically operated catch and a key operated latch, the former being usually attached to the casing, and the latter mounted upon the door.

The primary object of the invention is to obviate the necessity of notching the casing when fitting the catch thereto and to avoid the resultant bad finish.

The invention consists of a keeper or facing plate of peculiar form adapted to be attached to the door casing over the catch to coöperate therewith and with the latch carried by the door, said plate insuring a neat finish and performing the usual office of a keeper to protect the casing and co-act with the lock bolt of the fastening mounted upon the door.

The drawing illustrates a preferred embodiment of the invention, however, it is to be understood that in adapting the same to meet different conditions various changes in the form, proportion, and minor details of construction may be resorted to without departing from the nature of the invention as claimed hereinafter.

In the drawings:

Figure 1 is a horizontal sectional view of parts of a door and its casing showing the electrically operated catch, the lock and the keeper or facing plate in coöperative position, the casing of the latch and the keeper being in sections.

Fig. 2 is a front view of the keeper showing the relation of the pivoted stop member of the electrically operated catch.

Fig. 3 is a front view of the electrically operated catch, and the keeper or facing plate in operative position, the closing plate of the casing of the catch being removed.

Corresponding and like parts are referred to in the following description and indicated in the several views of the drawings by like reference characters.

The reference letter A designates a portion of the door casing or frame to which the electrically operated catch B is fitted. The door C coöperating with the casing has a lock or fastening D of ordinary construction applied thereto, said door being operable by means of knobs E. These parts are of well known construction and arrangement and do not require any detailed description.

The electrically operated catch B embodies a pivoted member 1 which constitutes a stop to coöperate with the latch bolt 2 of the lock or fastening D. When the door is closed and made secure the member or stop 1 is locked against movement in a manner well understood and is in engagement with the projecting end of the latch bolt 2. When it is required to release the door to admit of its opening, the locking means of the stop 1 are released electrically by closing the circuit in a manner well understood in electrically operated lock mechanisms of the type to which the present invention appertains. When the door closes the latch bolt 2 yields so as to clear the projecting portion of the stop 1 and after clearing the stop, the latch bolt is projected into engagement with the stop, thereby securing the door in the manner well understood and as indicated in Fig. 1.

The present invention relates more particularly to the keeper or facing plate 3 which is secured to the casing or frame A opposite the electrically operated latch B. The keeper or facing plate 3 is provided with an opening 4 to provide clearness for the projecting end of the latch bolt 2 when opening and closing the door. The projecting portion of the stop 1 is disposed opposite the opening 4 so as to engage with the projecting end of the latch bolt 2. The opening 4 extends through the forward edge of the keeper 3, and the extremity of the projecting portion of the stop 1 terminates about in the plane of the inner or rear face of the plate or keeper 3, as indicated most clearly in Figs. 1 and 3 of the drawings. The keeper or plate 3 is provided at its forward edge with an extension 5 which is adapted to overlie a portion of the casing or frame A in line with the electrically operated catch D. The extension 5 is offset from the plane of the plate or keeper 3 as indicated most clearly in Fig. 1. The offset is indicated at 6 and consists of portions of the plate bent approximately at a right angle thereto and to the extension 5. The extension 5 has a rearwardly projecting portion 7 in the plane thereof and disposed rearwardly of the offset portion 6 so as to enter

the contiguous side of the casing of the electrically operated catch B and terminating close to the outer face of the stop 1 so as to provide a close joint. A tongue 8 projects from the inner or rear edge of the projection 7 and is adapted to enter a groove 9 formed in the outer face of the stop 1. The tongue and groove 8 and 9 insure proper positioning of the parts and in practice, the keeper or facing plate 3 may be attached to the outer end of the casing of the electrically operated catch B, and for this purpose, the plate 3 is provided with openings 10 for receiving suitable fastening means.

From the foregoing taken in connection with the accompanying drawing, the operation of the invention is readily comprehended, but it may be well to state that, when fitting an electrically operated catch embodying the present invention to a door casing or frame, it is not necessary to notch the latter to make provision for clearance for the stop of the catch and the latch bolt of the lock. The extension 5 obviates the necessity for notching the door casing in the usual manner and besides, insures a neat finish and enables the catch to be placed in position in less time and with less effort. It should be remembered that the invention is adapted for right and left door securing means, hence the plate or keepers will be provided in rights and lefts, the forward edge being that facing the direction in which the door swings when open.

What I claim is:

1. In door fastening means of the character specified, a keeper or facing plate having an opening in the forward edge thereof and provided with a forward extension offset therefrom and having a rear extension projecting into the said opening.

2. In door securing means of the character specified, a keeper embodying a plate having an opening in the forward edge thereof and having a forward extension offset from the plate and in line with the opening thereof, said extension having a rear projection provided at its rear edge with a tongue, substantially as and for the purpose specified.

3. In door securing means of the character specified, a keeper or facing plate having an opening in its forward edge and provided with an extension offset therefrom, said extension having a rearwardly extending projection formed at its rear edge with a rearwardly projecting tongue, the several parts being of integral formation.

In testimony whereof I affix my signature in presence of two witnesses.

JEROME B. BROOKS.

Witnesses:

JOHN T. ROBERTS,

JEAN E. ROBERTS.

Copies of this patent may be obtained for five cents each, by addressing the "Commissioner of Patents, Washington, D. C."