Jan. 25, 1966 D. M. PEARL 3,231,056

BOX WITH HINGED CLOSURE

Filed Aug. 27, 1964

FIG. 1

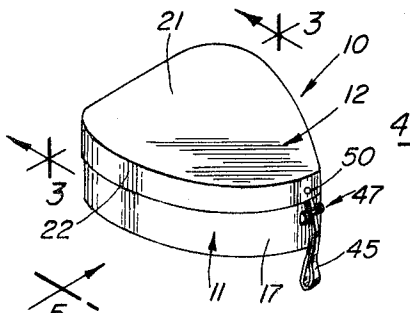

FIG. 2

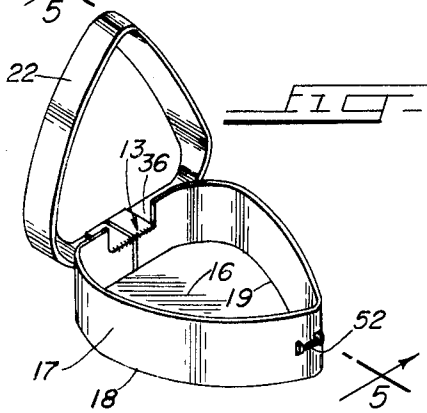

FIG. 3

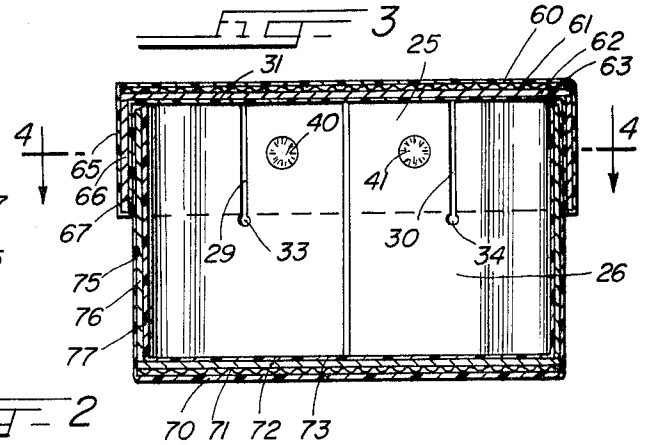

FIG. 4

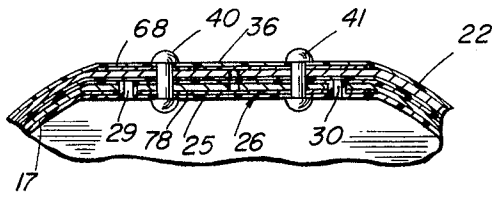

FIG. 5

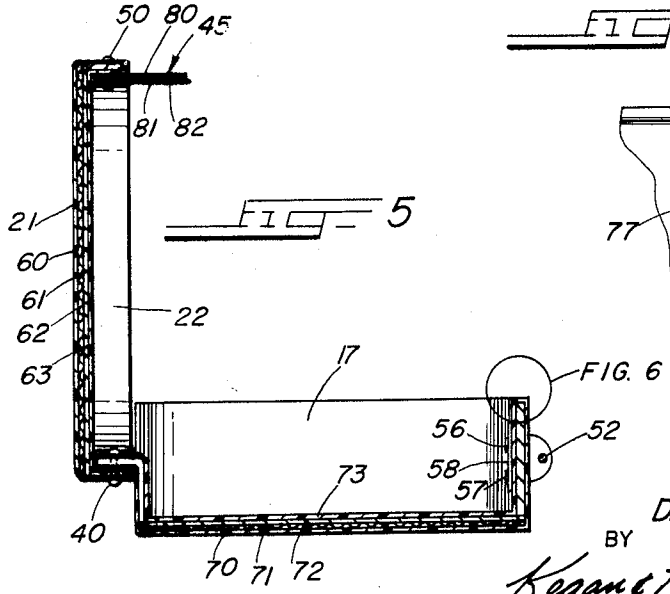

FIG. 6

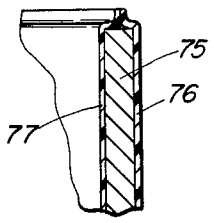

INVENTOR.
DANIEL M. PEARL
BY
Kegan & Kegan & Berkman
Attys.

United States Patent Office 3,231,056 Patented Jan. 25, 1966

3,231,056

BOX WITH HINGED CLOSURE

Daniel M. Pearl, Skokie, Ill., assignor to Sealatron Corporation, Chicago, Ill.

Filed Aug. 27, 1964, Ser. No. 392,482
3 Claims. (Cl. 190—41)

This invention relates generally to improvements in portable containers such as shoeboxes and hatboxes. More particularly, the invention is directed to hinge means, closure means, and carrying means for such containers. Also included within the scope of this invention are methods of fabricating the containers.

Various hinge arrangements and closure and carrying means have heretofore been provided for containers such as shoeboxes and hatboxes. These known prior art constructions have been relatively complicated in form and costly and time consuming in construction. They have had one or more objectionable features which have limited and impaired their usefulness. Accordingly the prior art devices have not found universal application and have not been adopted without reservations.

More specifically, it is the aim of the present invention to provide a novel hinge arrangement for a hatbox or a similar container which arrangement is of simple form and which is nevertheless completely effective for the intended purpose when applied to structures having pivotal lids attached thereto. A related aim of the invention is to provide a simple closure mechanism for a hatbox or the like, which closure mechanism also includes an integral carrying strap by means of which the box may be transported.

A principal object of the invention is to provide a novel hinge structure for a hatbox, shoebox, or the like having an improved integral hinge by means of which the cover is fastened to the box body.

Another object of the invention is to provide a closure and carrying means for containers such as shoeboxes and hatboxes which closure means is of simple form and is effective to prevent accidental opening of the box or container when being carried.

Still another object is to provide a novel carrying handle and strap which is of sturdy construction and is disposed so that the weight of the container and the goods stored therein aids in holding the container closed when being carried.

Other objects of the invention include the following: to provide a novel box hinge, carrying and closing arrangement, and over-all construction which can be economically produced; to provide a box which is sturdy in construction and neat in appearance yet which incorporates a minimum of material and fittings to ensure economy in production; and to provide methods by which the box or container of the invention may be fabricated.

Other and further objects and advantages of the invention will become apparent from a reading of the following specification taken in conjunction with the drawing in which:

FIGURE 1 is a perspective view of a closed shoebox, hatbox or the like incorporating the teachings of the present invention;

FIGURE 2 is a perspective view of the box, similar to FIGURE 1, but showing the box in an open position;

FIGURE 3 is a vertical cross sectional view of the box taken along the line 3—3 of FIGURE 1;

FIGURE 4 is a horizontal cross-sectional view of the rear wall and hinge section of the box taken along the line 4—4 of FIGURE 3;

FIGURE 5 is a vertical cross sectional view taken along the line 5—5 of FIGURE 2; and

FIGURE 6 is an enlarged fragmentary cross sectional view depicting a detail of constructing as indicated more generally in FIGURE 5.

Referring more particularly to the drawing, there is shown in FIGURES 1 and 2, for the purpose of illustrative disclosure, a preferred embodiment of the box of the invention, incorporating the teaching thereof. The box **10** illustrated includes a body **11** and a cover **12**, the cover **12** being permanently attached to the body **11** by means of a hinge element **13**. In the box illustrated, which is generally heart-shaped or triangular in form, the body **11** includes a base wall **16** and an endless side wall **17** integrally joined at its lower peripheral edge **18** to the periphery **19** of the base wall **16**, to provide an open top container. The box cover **12** is contoured to correspond to the contour of the body **11** of the box and comprises a top wall **21** integrally joined at its periphery to a depending endless side wall **22**. The over-all dimensions of the top wall **21** of the cover **12** are slightly greater than the dimensions of the base wall **16** of the box body so that the cover fits over the box body in a contiguous nesting relation, as illustrated in FIGURES 1 and 3.

The hinge **13** by means of which the cover **12** is joined to the body **11** of the box consists of a tab or flap **25** which forms an integral part of a substantially flat rearwardly disposed portion **26** of the side wall **17** of the box body **11**. As illustrated in FIGURE 2 and as shown more clearly in FIGURE 3, the hinge tab **25** is formed by providing two laterally spaced through slits or slots **29** and **30** in the rear wall portion **26** of the body of the box. The slits **29** and **30** extend downwardly from the top edge **31** of the wall **26** for a distance substantially equal to the vertical height of the side wall or depending flange **22** of the cover **12**. In use, the line of flexure of the hinge is defined by a line connecting the lower extremities of the slits **29** and **30**. In a preferred embodiment of the invention the lower extremities of the slits terminate in openings **33** and **34** which are generally rounded or curved to minimize any tendency of the structural material from which the box is fabricated to rip or tear. Fastening means are provided for attachment of the hinge tab **25** to the corresponding rear side wall **36** of the cover **12**. In the preferred embodiment of the box depicted, rivets **40** and **41** are used as fastening means to provide firm attachment of the tab **25** to the wall **36** on the inside thereof.

As illustrated in FIGURES 1, 2 and 5, the box is provided with a combination box closure and handle assembly which comprises a flexible strap **45** which slides under a bridge **47** to fasten the cover and the box body together and to provide a carrying means which may be held when transporting the box. In the particular embodiment depicted, the strap **45** is illustrated as a loop which is fastened on the inner side of the depending side wall or flange **22** of the crown **49** of the cover by means of a rivet **50**. The point of attachment of the carrying strap to the cover is preferably diametrically opposite the position of the hinge assembly. The bridge **47** beneath which the flexible carrying strap and closure member **45** passes consists of a bar or band **52** extending parallel to the base **16** of the box and supported outwardly from the side wall **17** of the box on spacers to provide a slot or opening to permit passing the strap between the bar **52** and the wall **17**. The bar **52** is attached to the wall **17** of the box by means of spikes, rivets **56** and **57**, or other suitable mechanical means. In a preferred embodiment of the box closure and handle assembly a reinforcing or strengthening plate **58** is provided on the inner wall portion of the box adjacent the point of attachment of the bar **52** to ensure that the bar and rivets will not be pulled from the side wall of the box body.

The preferred method of fabricating or constructing the box or carrying case of the invention is described be-

low. In the particular example of the box illustrated, the structure includes five (5) principal assemblies: an encapsulated top board or top wall and a gusset board or side wall, which form the cover of the assembly, an encapsulated bottom or base wall and an encapsulated bottom gusset board, which form the body of the assembly and a handle assembly. The top board or top wall **21** of the cover, as shown in FIGURE 3, consists of four components including an outer sheath **60**, a foam pad **61**, a chipboard stiffener **62** and a liner sheet **63**. The four elements are superimposed and aligned and the foam pad and the chipboard stiffener are then sealed between the two outer sheets to provide a one-piece composite assembly. Sealing of the two outer sheets is preferably by a heat sealing technique, these sheets, in preferred embodiments of the invention, being fabricated for a plastic or related material. The top gusset board or side wall **22** of the cover **12** consists of three components, an outer cover sheet **65**, a chipboard stiffener **66**, and a liner sheet **67**. These three layers are superimposed and the outer sheet is sealed to the liner sheet along one edge. The ends of this assembly are then joined by heat sealing using a butt type of seal. In a preferred procedure, a reinforcement **68** is provided to strengthen and to cover the butt seal portion. The encapsulated bottom board or base wall **16** of the box body is similar in construction to the top board and includes an outer sheet **70**, a foam pad **71**, a chicboard stiffener **72** and a liner sheet **73**. As previously described with reference to the top board, the composite is assembled and the outer and liner sheets are heat sealed along the periphery. The bottom gusset board or side walls **17** of the box body **11** is assembled in a manner similar to that described with reference to the top gusset board or wall **22** of the cover. However, prior to assembly, the chipboard element **75** is die-cut and scored to provide two end portions each defining a section which is movable. Upon assembly, these end portions are joined to provide a flat and movable surface which constitutes the mechanical hinge of the invention. The chipboard **75** is encapsulated between an outer cover sheet **76** and an inner liner sheet **77** and heat sealing is provided around the outer edge as well as in the area of the slotted portions bounding and adjacent the hinge. The end of the entire assembly is then joined and butt sealed. On the outer surface of the joined assembly adjacent the hinged portion a reinforcement **78** is provided to cover the butt seal and to add additional strength to the hinge. As indicated schematically in FIGURE 5, the handle assembly **45** consists of an outer cover **80**, an encapsulated filler board **81** and a second outer cover **82**, The outer covers being heat sealed along the edges to encapsulate the filler board.

In assembling the final components to provide the composite unitary structure, the top board assembly is placed on the top gusset assembly and side sealed around the periphery to join the two providing an integral top cover assembly **12**. The handle or strap **45** is then riveted to the front or crown **49** of the cover **12**. The bottom board assembly and bottom gusset board assembly are then sealed together to provide an integral unit which constitutes the body **11** of the box. The bridge **47** is then attached to the front of the box body **11** at the crown **49**. Finally, the cover and the box body are riveted together at the rear to attach the cover to the hinged element which is integral with the wall of the box body.

While for purposes of illustrative disclosure, the fabrication and construction of the subject invention has been described with reference to particular materials, it is apparent that many equivalent materials may be used. For example, although vinyl polymers and vinyl copolymers are preferred cover and liner sheet materials, board has been referred to as the stiffening or bodying agent and is a preferred material because of economic considerations. However, rigid or semi-rigid plastics may be substituted for the chipboard. Suitable materials include polystyrenes, polyesters, and other thermo-plastics as well as thermo-setting polymeric materials. The internal padding may be fibers, natural or synthetic rubber, or urethane or any equivalent material.

While disclosures of preferred embodiments of the box and of preferred methods for assembly and fabrication of the box of the invention have been provided, it will be apparent that numerous modifications and variations thereof may be made without departing from underlying principles of the invention. It is, therefore, desired by the following claims to include within the scope of the invention all such variations and modifications by which substantially the results of this invention may be obtained through the use of substantially the same or equivalent means.

What is claimed is:

1. A plastic container of flexible plastic sheet material, said container comprising a body having a base wall, an endless side wall integrally joined to said base wall at a peripheral edge thereof and extending upwardly therefrom,

a cover for said container, said cover having a top wall contoured to correspond with the contour of said base wall, and an endless side wall integrally joined to said top wall at a peripheral edge thereof and depending downwardly therefrom,

said body of said container and said cover for said body of said container comprising walls of multilayer construction including a liner sheet, a cover sheet, and a stiffener sheet therebetween and coextensive therewith to define composite unitary structures,

said side wall of said cover being adapted to fit over and to surround the outer surface of upper portions of said side wall of said body in contiguous nesting relation therewith;

a hinge integral with and formed in and of said side wall of said body,

said hinge comprising a tab integral with and pivotally connected to said side wall of said body along a flexure line substantially parallel to a plane defined by the top edge of said side wall of said body and intermediate upper and lower peripheral edges of said side wall of said body,

said side wall of said body having a pair of laterally spaced through slots extending downwardly from said top edge of said side wall of said body to said flexure line defined by juncture of said tab with said side wall of said body, said slots defining lateral limits of said tab,

joinder means connecting said tab to a corresponding portion of said side wall of said cover,

and a combination container closure and handle assembly comprising a flexible strap having a free end and a fixed end,

means permanently connecting said fixed end of said strap to said side wall of said cover at a position diametrically opposite the point of attachment of said cover to said body,

bridge means affixed to and supported on said side wall of said body at a position corresponding to a point of connection of said strap to said cover,

said bridge means defining with said side wall of said body a through slot adapted to receive said free end of said strap therethrough;

whereby upon closure of said cover over said body said strap may be pulled through said slot to provide a closure for said container and whereby said strap also serves as a handle for said container.

2. The handle assembly set forth in claim **1** wherein said flexible strap comprises a loop attached to the underside of said side wall of said cover.

3. The container of claim **1** wherein said cover comprises a padded top board consisting essentially of a liner sheet, a cover sheet, and a stiffener sheet and a re-

silient pad therebetween, all coextensive to define a composite unitary structure.

References Cited by the Examiner

UNITED STATES PATENTS

1,498,669	6/1924	Moore	229—44
1,666,913	4/1928	Rappaport	229—44
1,667,014	5/1928	Snell	190—41 X
1,734,587	11/1929	Lowe.	

1,975,453	10/1934	Fink	229—52
2,037,341	4/1936	Scandore	229—44
2,093,296	9/1937	Vincent	229—44
2,141,743	12/1938	Ethridge	229—44 X
2,745,524	5/1956	Plotkin	190—57
2,924,373	2/1960	Divozzi	229—44
2,992,768	7/1961	Gatward	229—52 X

JOSEPH R. LECLAIR, *Primary Examiner.*

FRANKLIN T. GARRETT, *Examiner.*