(No Model.)

G. J. CLINE.

LATCH.

No. 321,279. Patented June 30, 1885.

Fig. 1.

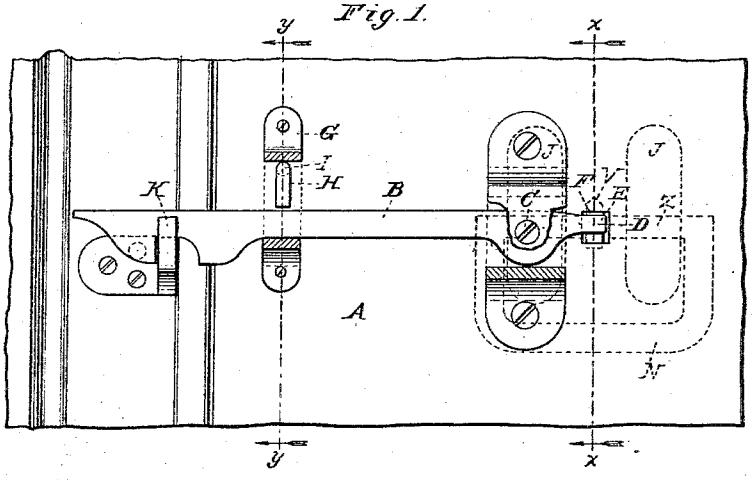

Fig. 2.

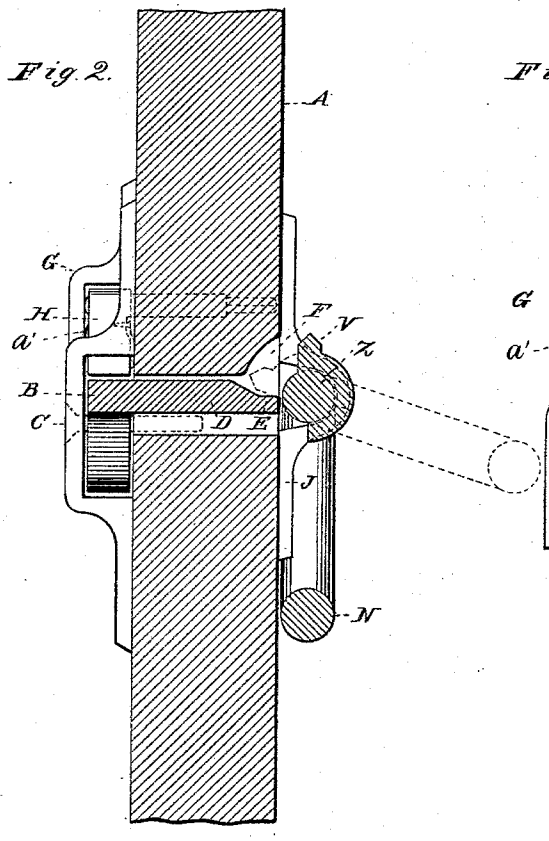

Fig. 3.

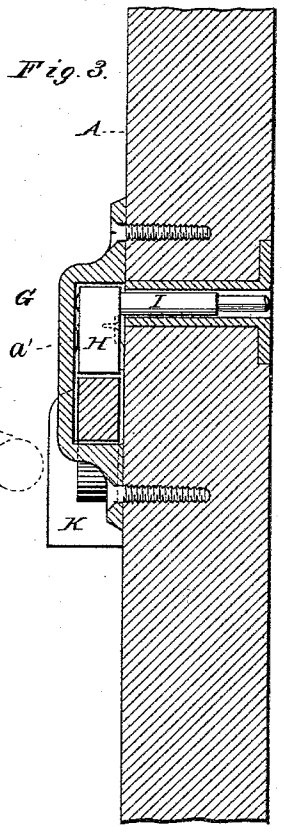

WITNESSES

Villette Anderson.

Grace M Craig

INVENTOR

Geo. J. Cline.

by Anderson & Smith

his ATTORNEYS

N. PETERS, Photo-Lithographer, Washington, D. C.

UNITED STATES PATENT OFFICE.

GEORGE J. CLINE, OF GOSHEN, INDIANA.

LATCH.

SPECIFICATION forming part of Letters Patent No. 321,279, dated June 30, 1885.

Application filed March 14, 1885. (No model.)

To all whom it may concern:

Be it known that I, GEORGE J. CLINE, a citizen of the United States, resident at Goshen, in the county of Elkhart and State of Indiana, have invented certain new and useful Improvements in Latches; and I do declare the following to be a full, clear, and exact description of the invention, such as will enable others skilled in the art to which it appertains to make and use the same, reference being had to the accompanying drawings, and to letters or figures of reference marked thereon, which form a part of this specification.

Figure 1 of the drawings is a front view, partly in section, of the latch embodying my invention. Fig. 2 is a vertical section thereof taken on the line *x x*, Fig. 1. Fig. 3 is a vertical section taken on the line *y y*, Fig. 1.

This invention has relation to latches; and it consists in the construction and novel arrangement of devices, all as hereinafter set forth, and pointed out in the appended claim.

In the accompanying drawings, the letter A designates a door or gate, and B a latch pivoted thereto on the inside at C, and having an extension, D, in rear of the pivot, which is provided with a bearing, E, on the side next the door, and accessible through an opening, F, in said door.

G is the guard-bracket, which is secured to the door near the front or catch end of the latch, and serves to limit the movements of the latter. Within the upper portion of this guard is a locking-tongue, H, having a pivot, I, which is made with a key-seat at its outer end for the application of a key. When the locking-tongue is turned down, the latch cannot be raised, and is therefore secured in its engagement with the keeper K.

On the outside of the door is the handle N, which is pivoted in horizontal bearings J, and is designed to hang against the door when not in use. When it is designed to raise the latch and open the door, the handle is raised to a horizontal position, and by means of a stud, V, on the central portion of its pivot-bar Z engagement is effected with the rear extension of the latch, depressing the same and raising the front or catch portion of said latch out of the keeper.

If the latch is locked the raising of the handle will not suffice to disengage the latch, and the latter therefore must be first released by applying a key to the locking-tongue and turning the same up out of the way. The locking-tongue should be provided with a small friction-spring, *a'*, to cause it to retain its position when raised.

Having described this invention, what I claim, and desire to secure by Letters Patent, is—

The combination, with a latch having a rear extension and a pendent pivoted handle provided with a stud to act on the rear extension, of the front guard limiting the play of the latch, and the pivoted locking-tongue in said guard having a key-seat at the outer end of its pivot, substantially as specified.

In testimony whereof I affix my signature in presence of two witnesses.

GEORGE J. CLINE.

Witnesses:

LOUIS G. DEAN,

F. E. BAKER.