July 15, 1930. E. OEHMICHEN 1,770,659

CINEMATOGRAPHIC APPARATUS

Filed June 20, 1927 2 Sheets-Sheet 1

Fig. 1

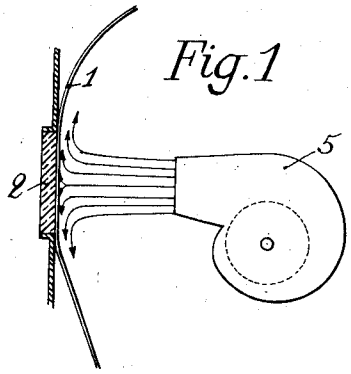

Fig. 2

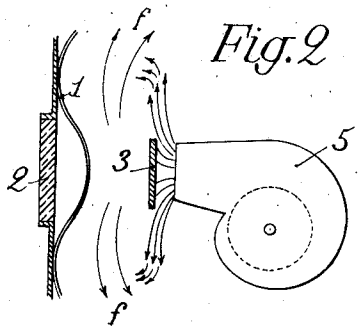

Fig. 3

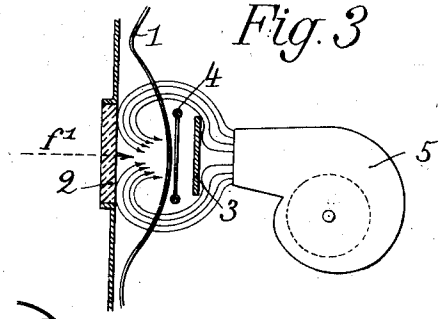

Fig. 4

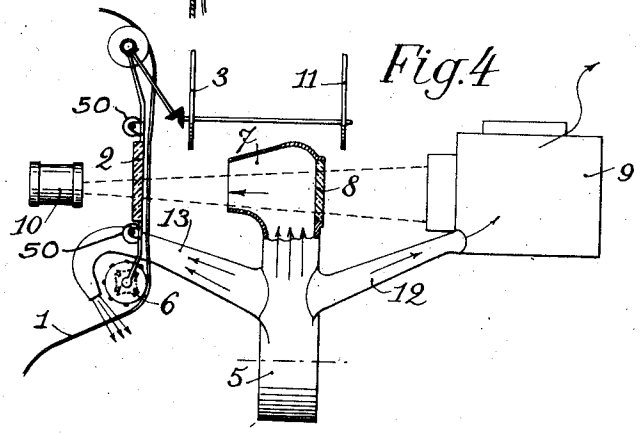

E. Oehmichen
INVENTOR

By: Marks & Clark
Attys.

July 15, 1930. E. OEHMICHEN 1,770,659

CINEMATOGRAPHIC APPARATUS

Filed June 20, 1927 2 Sheets-Sheet 2

Fig. 5

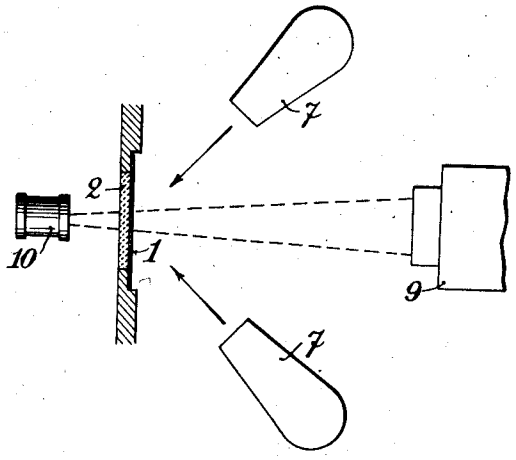

E. Oehmichen
INVENTOR

By: Marks & Clerk
Attys.

Patented July 15, 1930 1,770,659

UNITED STATES PATENT OFFICE

ETIENNE OEHMICHEN, OF VALENTIGNEY, FRANCE

CINEMATOGRAPHIC APPARATUS

Application filed June 20, 1927, Serial No. 200,253, and in France July 2, 1926.

The present invention relates to improvements in cinematographic apparatus whereby the lengthwise motion of the film will be facilitated.

The principal improvement is based upon the use of a periodic current of air which is delivered upon the film in such manner that the said film will be applied upon a stationary support which has a flat surface and is of a transparent nature, and is then disengaged from the said surface and is given its entire freedom, so that it may be subjected without resistance to the action of the film-moving mechanism such as claws, Maltese cross wheel, or the like.

The appended diagrammatic drawings which are given by way of example show constructional forms embodying the improvements according to the invention.

Figs. 1 to 3 are diagrams showing the action of a current of air upon a flexible band.

Fig. 4 is a partial vertical section of a lantern projection apparatus.

Fig. 5 is a vertical section of a modification.

If a stream of air is delivered at a sufficient speed upon the back face of a flexible band 1 in the front of which is a flat surface 2, the stream of air will apply the said band against the surface and the band will thus become flat throughout its entire surface (Fig. 1). If the stream of air is then cut off by a screen 3 (Fig. 2) a vacuum will at once succeed the excess of pressure, due to the inertia of the air which was originally sent upon the surface and which, continuing to escape, tends to produce a vacuum in the region which was previously subjected to the pressure. The film will thus separate abruptly from the surface 2 against which it was pressed, without making it necessary to raise it by claws or by an impelling device.

If the edges of the screen do not entirely come together, i. e. if a certain space is left between its plane and the outlet of the air discharge device, there will be subsequently established a counter-current of air which holds a film apart from the supporting surface in a permanent manner (Fig. 3).

Fig. 2 shows the effect of the instantaneous vacuum; due to the continuous motion of the air in the directions of the arrows f, the film 1 separates from the surface of the plate 2. Fig. 3 relates to the working position; the film is still further separated from the said surface by the action of the counter-current having the direction f^1. A small frame 4 serves to limit the forward motion of the film 1.

In Figs. 1, 2 and 3, it is supposed that the current of air is produced by an air blower 5 which is placed directly at the back side of the film. By this means, there will be no friction between the guiding device, and the film-moving mechanism will meet with no resistance to the forward travel of the film, whereby the strains on the perforations will be much less great, as compared with an apparatus employing a constant mechanical pressure to hold the film in its guide.

A constructional form of apparatus in accordance with the invention is shown by way of example in Fig. 4 as concerns a cinematographic apparatus for screen projection, in order to disclose the principle, but it is obvious that the invention is not limited to the present example. 2 is a transparent plate, 6 is the film moving device with claws or Maltese cross wheel, 5 is a blower, 7 is a chamber faced with glass at 8 and delivering the stream of air towards the film, 9 is the illuminant, 10 is the lens, and 3 is the closing device or shutter which is in mechanical combination with the feeding movement of the film and is given a circular or a reciprocating motion in order to shut off the current of air somewhat before the beginning of said movement and to give access to the air at the end of the forward travel of the film.

The air shutter 3 may also serve as an optical shutter, but in order to avoid all trouble in the projection, I prefer to entirely close off the film at the time at which the shutter 3 of the blower begins to cut off the air; at this moment there is in fact produced a movement of separation of the film which must be concealed in order to obtain a screen projection free from all flickering effects. For this purpose I employ a screen 11 having a

rotary or a reciprocating motion which acts upon the beam of light, on the same axis as the air shutter, but outside of the current of air, and it may be suitably adjusted relatively to the said air shutter by the proper setting. The air blower may have any suitable position, and the air chamber 7 may be supplied by two separate pipes.

The air stream, which also cools the glass plate 2 used with the film, may further serve for secondary purposes, and may for instance cool the general apparatus by taking off a certain amount of the air supplied by the blower and sending it through a pipe 12 so as to circulate in the lantern apparatus.

A pipe 13 leading from the blower may be so disposed as to deliver a current of air upon the film in order to facilitate its release from the film-moving drums to which it often adheres. The said current will act upon the film to deflect it from the direction which it would tend to assume and to separate it from the drum 6, but without any friction on the film by which it would be scratched. I may obtain like results by replacing the single stream which is perpendicular to the film by two streams having the oblique direction and the symmetrical positions, as shown in Fig. 5, in which the two nozzles 7 are placed on the respective sides of the path of the beam of light.

As a general rule, the air pipes may be placed at any points at which the film is to be guided or its direction changed, in order to assure the proper functioning of the apparatus.

Having thus described my apparatus, what I claim as new therein, and my own invention, is:

1. In a cinematographic apparatus, the combination of a lens, means for guiding the film in front of the said lens and upon which is provided a flat surface along which the film moves, means for directing a stream of air upon the back face of the said film and for pressing the film against the said flat surface under the action of the stream of air, means for periodically interrupting the said stream of air and means for moving the said film separated in the interval between each stream of air.

2. In a cinematographic apparatus, the combination of a lens, means for guiding the film in front of the said lens, and upon which is provided a flat surface along which the film moves, means for directing a stream of air upon the back face of the said film and for pressing the film against the said flat surface under the action of the said stream of air, an air supply chamber disposed behind the said flat surface and in which is provided an aperture turned towards the film and carrying a transparent plate placed opposite the said aperture, means for connecting the said chamber to the said means for directing the stream of air, means for periodically interrupting the said stream of air, and means for moving the said film separated in the interval between each stream of air.

3. In a cinematographic apparatus, the combination of lens, means for guiding the film in front of the said lens, and upon which is provided a flat surface along which the film moves, means for directing a stream of air upon the back face of the said film and for pressing the film against the said flat surface under the action of the said stream of air, means for periodically interrupting the said stream of air, and driving means for moving the said film at every interruption of the stream of air, part of the said stream of air being directed upon the film at the place where the same leaves the said driving means, and in such a direction that the thrust of the said stream of air against the said film assists in separating the latter from the said driving means.

In testimony whereof I have hereunto affixed my signature.

ETIENNE OEHMICHEN.