US 20070131236A1

(19) United States

(12) Patent Application Publication

(10) Pub. No.: US 2007/0131236 A1

(43) Pub. Date: Jun. 14, 2007

Wakisaka

(54) HAIRPIECE

(75) Inventor: **Urei Wakisaka**, Culver City, CA (US)

Correspondence Address:
CISLO & THOMAS, LLP
233 WILSHIRE BLVD
SUITE 900
SANTA MONICA, CA 90401-1211 (US)

(73) Assignee: **Rene of Paris**

(21) Appl. No.: **11/297,960**

(22) Filed: **Dec. 9, 2005**

Publication Classification

(51) **Int. Cl.**
A41G 3/00 (2006.01)

(52) **U.S. Cl.** **132/53**

(57) **ABSTRACT**

A hairpiece comprises a monofilament base and a plurality of hair strands attached by hand-knotting to the monofilament base. The monofilament base includes a grid-like pattern of open monofilament cells adapted to promote airflow during use. The hair strands are hand-knotted to the monofilament base one strand at a time. The monofilament base includes first and second side edges being substantially parallel to each other, a rear edge, and a slightly contoured front edge. The front edge is padded to enhance hairpiece flexibility. The padded front edge is provided with single strand, single hand knot construction to promote a more natural look for the monofilament base.

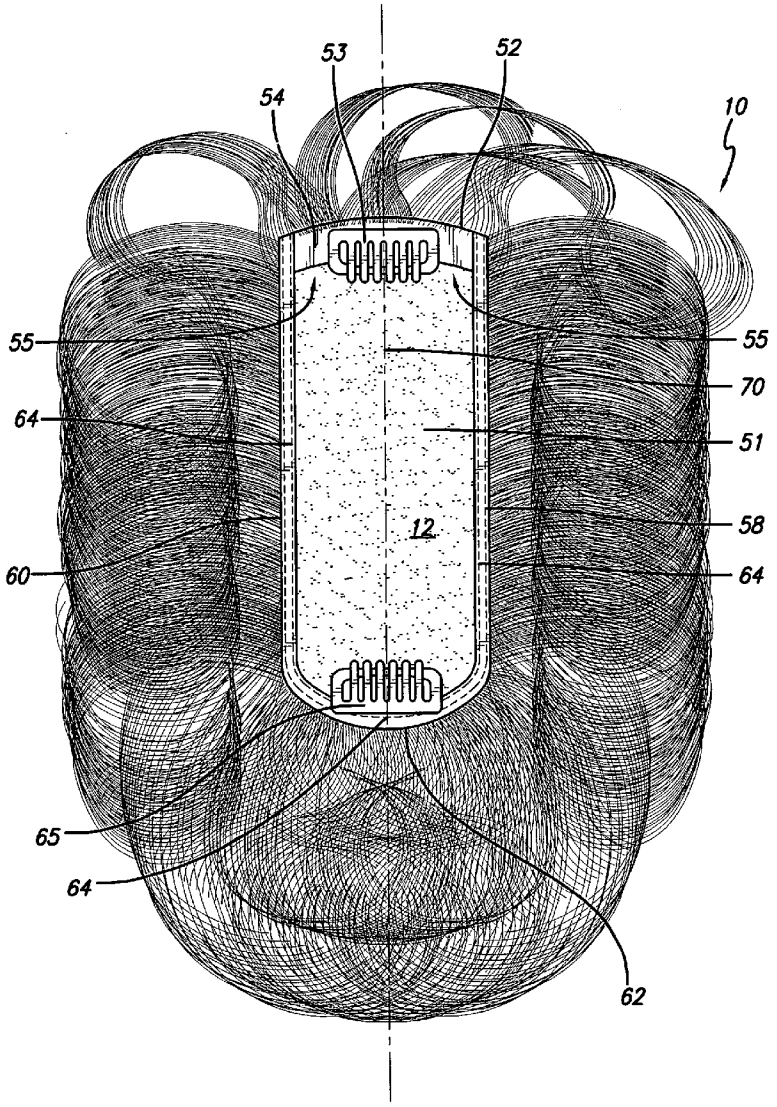

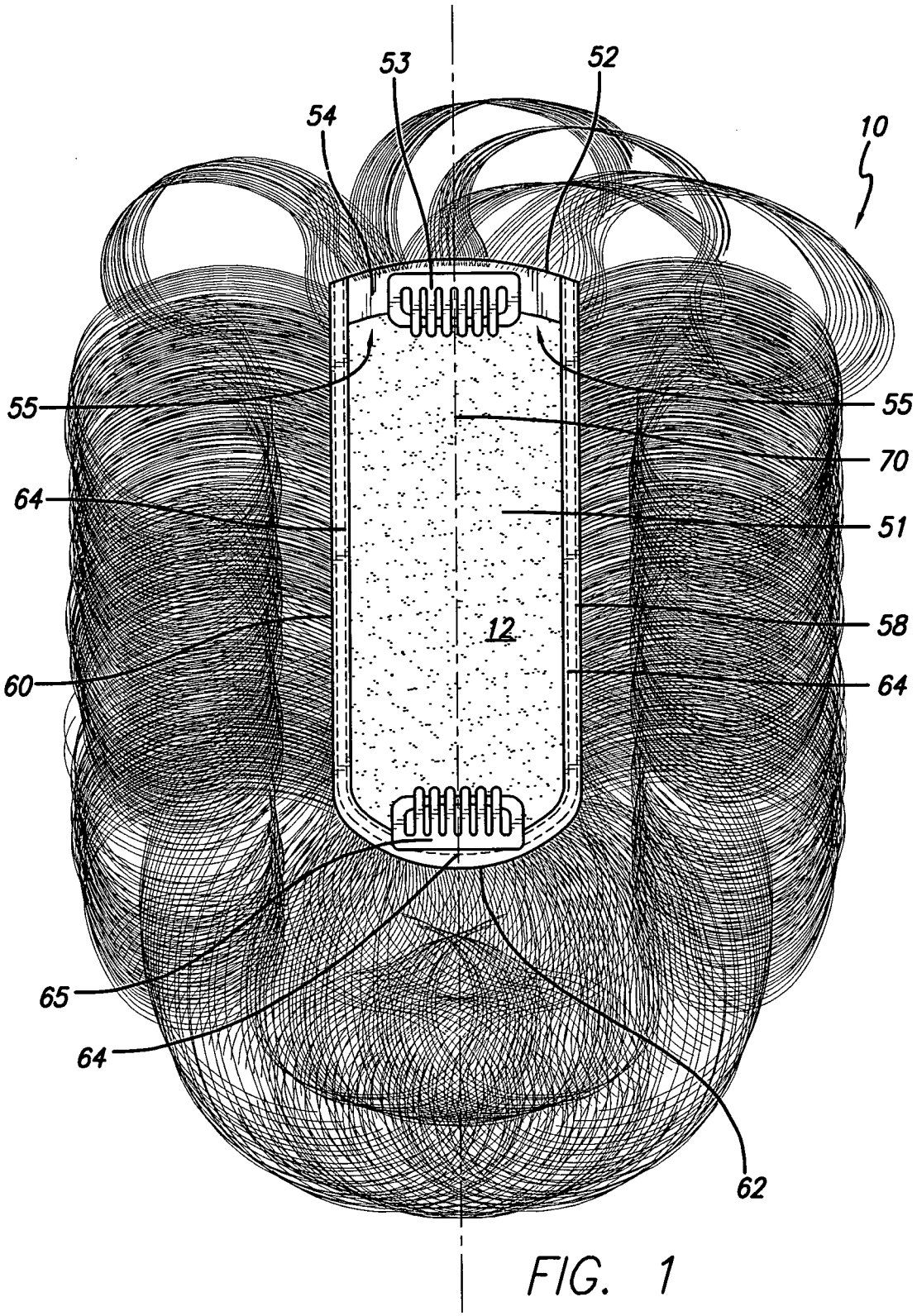

FIG. 1

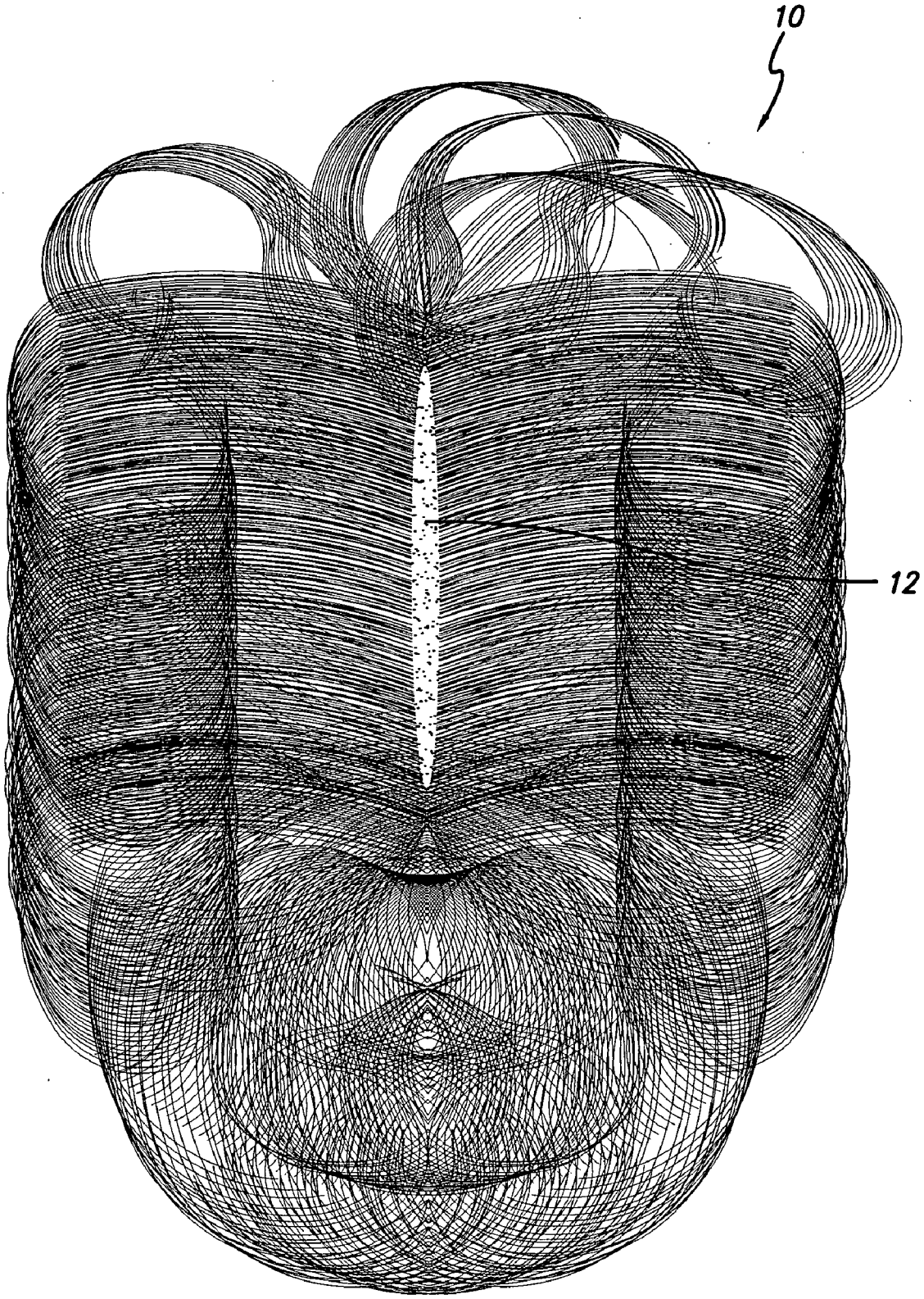

FIG. 2

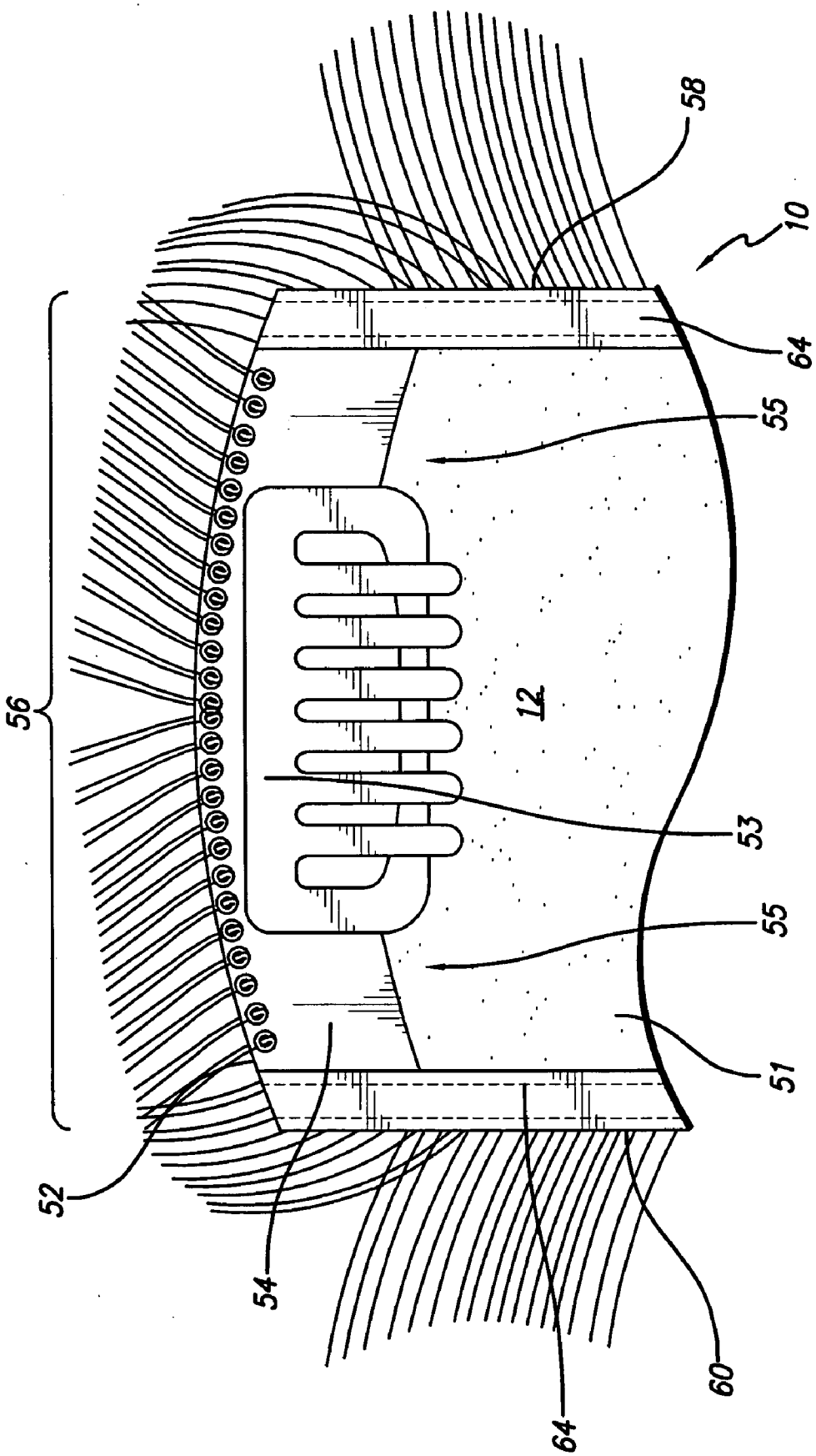

FIG. 3

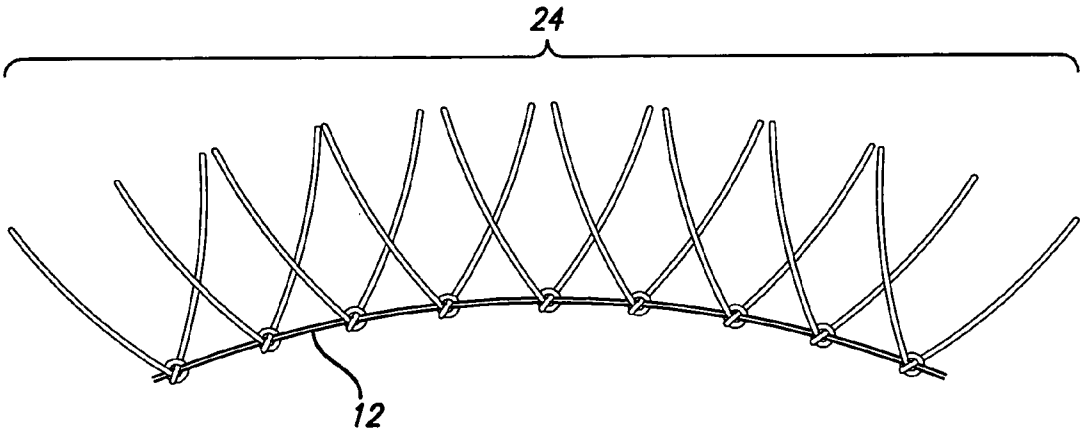

FIG. 4

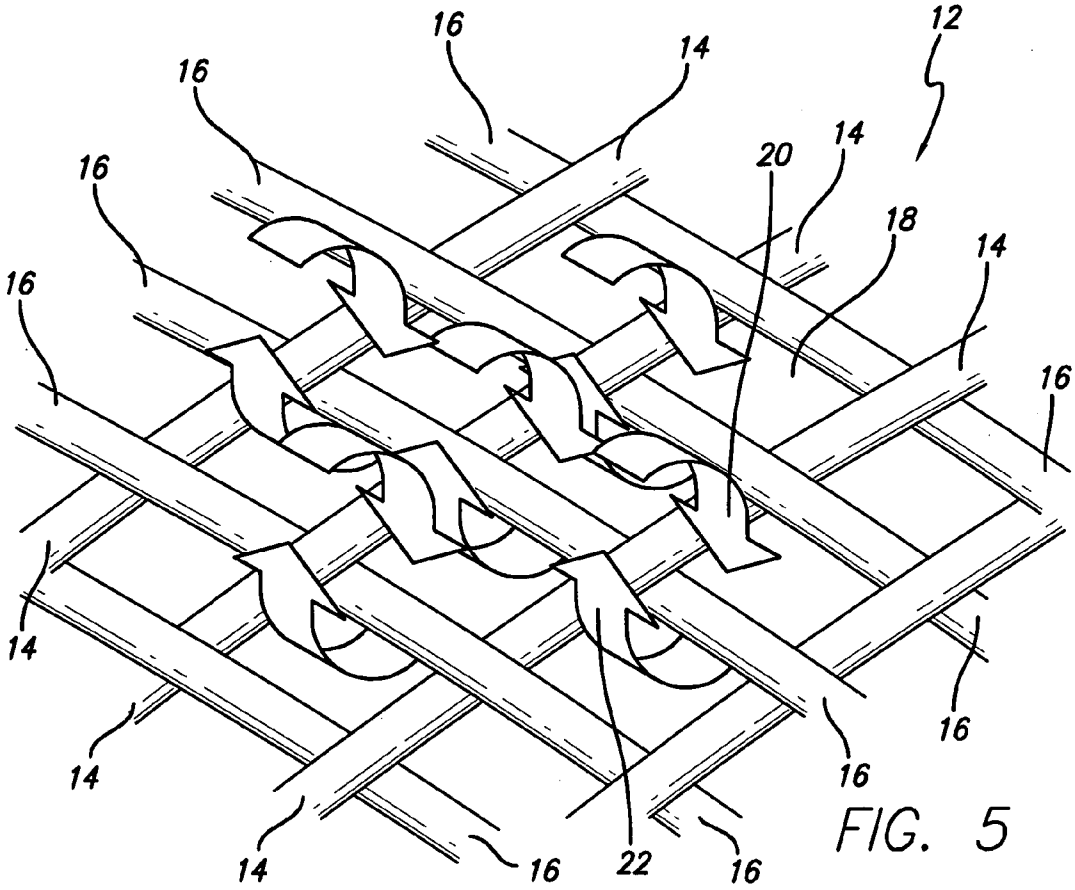

FIG. 5

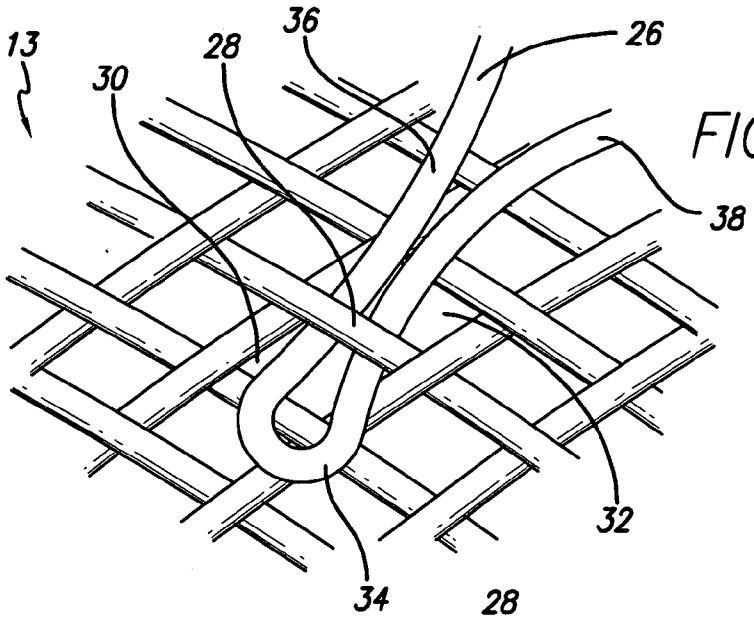

FIG. 6A

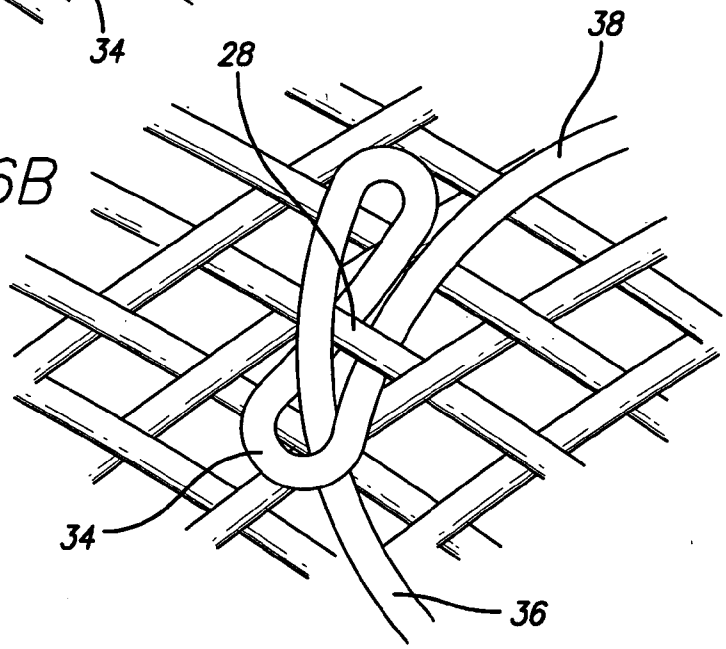

FIG. 6B

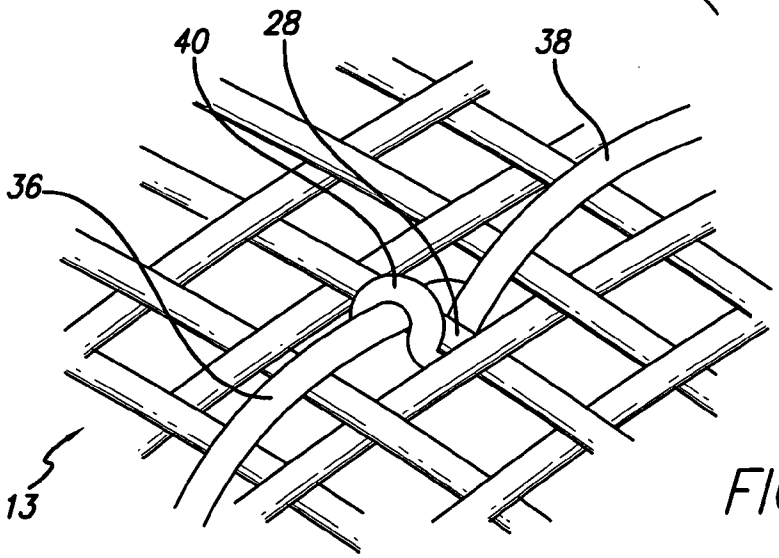

FIG. 6C

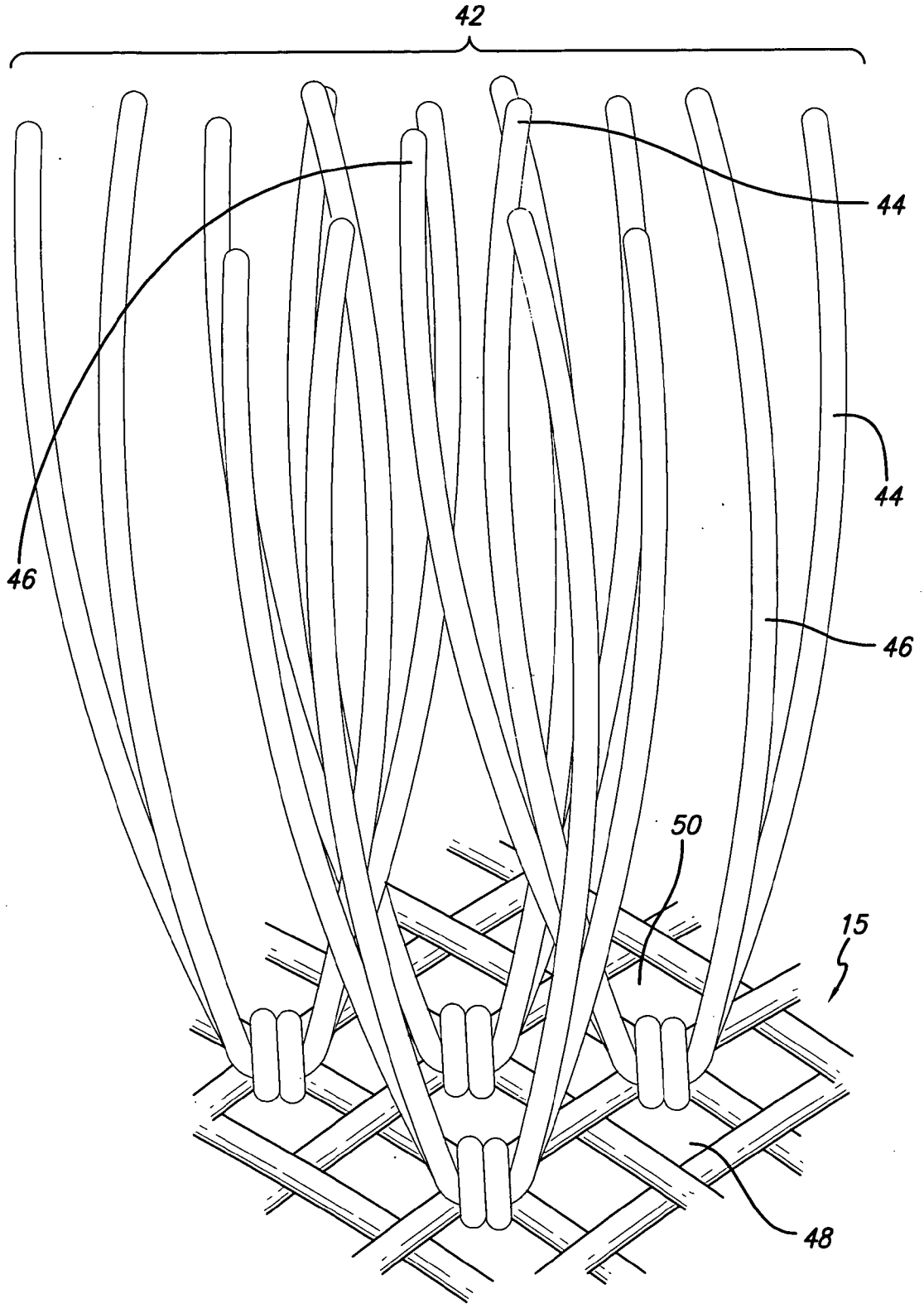

FIG. 7

HAIRPIECE

COPYRIGHT NOTICE

BACKGROUND

[0002] The popularity of hair supplements for cosmetic use has dramatically increased in recent years. The desire to enhance one's physical appearance is more prevalent today than ever. Traditionally, the desire to change or enhance one's hair has been accomplished through the use of wigs, hair weaves or hairpieces.

[0003] Hair weaving, while allowing some airflow to the scalp, requires the assistance of another individual to weave the hair into the user's personal hair. Methods for securing the hair weave include hair bonding adhesive, weaving threads, hair clips, combs, braiding, or knotting human or synthetic hair to the wearer's hair. These methods of attachment, however, may cause discomfort as well as damage to the user's hair.

[0004] A hairpiece may be constructed of artificial or natural hair that is attached to a cap or base portion. The base portion is used to fix the hairpiece onto the head of a user. Artificial hair may be made by using a fibrous form of polyester, rayon, cotton, etc. The base portion may be made of synthetic or natural fiber. The hair may be attached to the base portion manually and/or by using sewing machines. Nowadays, most artificial hair is made of various types of synthetic fibers. The reasons for this include ease of manufacture, low cost, readiness in obtaining the desired color of hair, and the desire for less troublesome washing and care for the hair. Hairpieces are especially useful for users who have experienced hair loss.

[0005] Hair loss is a long-standing problem affecting both genders. While some people affected by hair loss simply accept the resulting change in appearance, others choose to retain a full head of hair. Hair loss can diminish one's confidence and actually be a physically perceived discomfort to women, whether it is a permanent condition related to chemical imbalance, illness, or chemotherapy treatment.

[0006] One early solution involved the use of full-head wigs to simply mask an individual's balding head. While the use of a wig covers regions of lost or thinning hair, such wigs were not the answer for everyone. Wigs that cover the entire head provided too much coverage for users who needed only partial coverage. In an attempt to help such users, hairpieces of various sizes were created. These hairpieces had the advantage of exposing an individual's existing hair, while covering only the balding areas. However, these hairpieces employed relatively thick cloth-based caps which brought about additional problems. The thick cloth-based caps looked unnatural on a user's head. Since hairpieces were worn specifically to improve the appearance of their users, these unnatural looking hairpieces proved to be unacceptable solutions for many consumers.

[0007] To improve the appearance of hairpieces, designers started making relatively thin hairpiece bases. These bases, however, created an unnatural looking front hairline for those who wore them. As a result, the mounting structure was visible to even the casual observers.

[0008] Additionally, these hairpiece bases did not promote sufficient airflow over the scalp portion under the hairpiece. Built-up heat and moisture made these hairpieces quite uncomfortable. To address this problem, lace-front hairpieces were created. Lace-front hairpieces included front pieces made from woven mesh onto which hairs had been attached. These hairpieces did, in some instances, improve the front hairline of wearers. Unfortunately, these hairpieces did not sufficiently address the airflow problem characteristic of earlier hairpiece designs.

[0009] To improve airflow and comfort, hairpieces were created with bases made entirely from mesh-like material. These hairpieces improved, to a certain extent, breathability. However, the mesh bases lacked sufficient structural integrity to be removed and re-applied on a regular basis. The bases tended to become stretched out of shape with repeated use.

[0010] Accordingly, the need exists for a hairpiece that is breathable, blends inconspicuously with a user's existing hair and scalp color, shows no mounting structure, and has the structural integrity needed to withstand multiple applications and removals. Such a hairpiece should have sufficient shape retention capability to facilitate such multiple applications and removals and a front portion that looks natural.

SUMMARY

[0011] Exemplary embodiments disclosed herein are generally directed to a hairpiece.

[0012] In accordance with one aspect of the invention, the hairpiece comprises a monofilament base adapted to promote airflow during use. The hairpiece also comprises a plurality of hair strands hand-knotted to the monofilament base at least one hair strand at a time, and a front edge on the monofilament base having single hair strand, single hand-knot construction to promote a natural look for the monofilament base

[0013] In accordance with another aspect of the invention, the hairpiece comprises a monofilament base including a grid-like pattern of open monofilament cells adapted to promote airflow during use, and a plurality of hair strands hand-knotted in pairs to the monofilament base. The hairpiece also comprises a front edge on the monofilament base having single hair strand, single hand-knot construction to promote a natural look for the monofilament base.

[0014] In accordance with yet another aspect of the invention, the hairpiece comprises a substantially elongated monofilament base adapted to promote airflow during use, and a plurality of hair strands attached by hand-knotting to the monofilament base. The hair strands are hand-knotted on the monofilament base at least one strand at a time. The hairpiece also comprises a first side edge on the monofilament base, a second side edge on the monofilament base, with the second side edge being substantially parallel to the first side edge, and a substantially arcuate rear edge on the monofilament base. The rear edge is disposed between the

first and second side edges. The hairpiece further comprises a minimally contoured front edge on the monofilament base. The front edge is disposed between the first and second side edges opposite the rear edge and padded to enhance hairpiece flexibility. The padded front edge is provided with single-strand, single hand knot construction to promote natural look for the monofilament base.

[0015] In accordance with still another aspect of the invention, the hairpiece comprises a substantially elongated monofilament base having a center line, a padded front edge and a substantially arcuate rear edge, and a plurality of hair strands attached by hand-knotting to the monofilament base. The hair strands are hand-knotted on the monofilament base at least one strand at a time. The padded front edge is provided with single-strand, single hand knot construction to promote natural look for the monofilament base. The hand-knotted hair strands are distributed substantially equally to the left and right of the center line away from the padded front edge until a first distance from the arcuate rear edge is reached. The hand-knotted hair strands are distributed in a substantially multi-directional fashion similar to a half-moon spread after the first distance is reached.

[0016] These and other aspects of the invention will become apparent from a review of the accompanying drawings and the following detailed description of the invention.

BRIEF DESCRIPTION OF THE DRAWINGS

[0017] The present invention is generally shown by way of reference to the accompanying drawings in which:

[0018] FIG. **1** is a bottom perspective view of a hairpiece constructed in accordance with the present invention;

[0019] FIG. **2** is a top perspective view of the hairpiece of FIG. **1**;

[0020] FIG. **3** shows a front portion of a hairpiece with single hair strand (under ventilation) construction in accordance with the present invention;

[0021] FIG. **4** shows single-strand hairpiece construction in accordance with one embodiment of the present invention;

[0022] FIG. **5** schematically shows a monofilament hairpiece base and associated airflow in, accordance with the present invention;

[0023] FIGS. **6***a*-**6***c* schematically show a hair strand being tied in a single knot in accordance with the present invention; and,

[0024] FIG. **7** schematically shows double-strand hairpiece construction in accordance with another embodiment of the present invention.

DETAILED DESCRIPTION

[0025] The detailed description set forth below in connection with the appended drawings is intended as a description of exemplary embodiments and is not intended to represent the only forms in which the exemplary embodiments may be constructed and/or utilized. The description sets forth the functions and the sequence of steps for constructing and operating the exemplary embodiments in connection with the illustrated embodiments. However, it is to be understood that the same or equivalent functions and/or sequences may be accomplished by different embodiments that are also intended to be encompassed within the spirit and scope of the present invention.

[0026] Some embodiments of the present invention will be described in detail with reference to a hairpiece, as generally shown in FIGS. **1**-**7**. Additional embodiments, features and/or advantages of the invention will become apparent from the ensuing description or may be learned by practicing the invention. In the figures, the drawings are not to scale with like numerals referring to like features throughout both the drawings and the description.

[0027] FIG. **1** is a bottom perspective view of a hairpiece **10** in accordance with the present invention. Hairpiece **10** includes a generally elongated monofilament base or cap **12**. For purposes of describing the general principles of the present invention, the term "monofilament" generally refers to a thin gauze-like, nearly transparent material which is more comfortable to the touch than hairpiece caps made of cloth material. Monofilament material may be made from strands of untwisted synthetic fibers, such as nylon. Being nearly transparent, the monofilament fabric takes on the approximate color of a user's scalp. This chameleon-like effect results in a more natural looking hairpiece which bares the natural scalp color of the user.

[0028] Monofilament base **12** may be configured as a mesh-like lattice of transversely oriented sets of synthetic fibers **14**, **16** (FIG. **5**). Each respective set contains fibers that are substantially parallel to and evenly spaced from each other. The two sets of fibers **14**, **16** are arranged in an overlapping manner, forming a grid-like pattern, as generally illustrated in FIG. **5**. The two sets of fibers (**14**, **16**) may be joined at points of overlap to form a plurality of four-sided open regions or cells, such as, for example, cell **18** in FIG. **5**. The walls of the formed cells are somewhat resilient as synthetic fibers **14**, **16** are generally flexible to a certain extent which contributes to a better fit on the scalp of a user. This type of weaving provides airflow circulation for monofilament base **12**, as generally depicted by directional arrows **20**, **22** in FIG. **5**. The open-cell construction of monofilament base **12** allows the user's scalp to "breathe", i.e. prevents the buildup of heat and/or moisture on the scalp portion that is disposed directly under monofilament base **12**. The monofilament grid-like structure of base **12** provides the structural integrity needed to withstand multiple applications and removals of hairpiece **10**.

[0029] A person skilled in the art would appreciate that an alternative construction of monofilament base **12** may utilize a double layer of overlapping transversely oriented sets of synthetic fibers, if needed. Other monofilament weaving configurations may be possible, provided such other monofilament weaving configurations reside within the intended scope and spirit of the present invention.

[0030] In accordance with the general principles of the present invention, each of hair strands **24** (FIG. **4**) may be attached to monofilament base **12** (FIG. **4**) via a single hand knot, one hair strand at a time. In one exemplary embodiment, a single hair strand **26** may be looped and threaded by hand under a cell wall **28** (which is common to adjoining cells **30**, **32**) of a monofilament base **13**, as generally depicted in FIG. **6**a. Particularly, looped portion **34** and terminal ends **36**, **38** of hair strand **26** are disposed on each side of cell wall **28**. Thereafter, terminal end **36** of hair

strand **26** may be threaded through looped portion **34** (FIG. **6**b) and pulled away from terminal end **38** of hair strand **26** by hand to form a single-strand knot **40** at cell wall **28** (FIG. **6**c). A person skilled in the art would readily appreciate that hand knots of hair strands may also be formed by other suitable technique(s), as needed.

[**0031**] Moreover, more than one hair strand may be hand-knotted on a monofilament cell wall or at the junction of two monofilament cells, as generally shown, for example, in reference to FIG. **7**. In FIG. **7** hair strands **42** are hand-knotted in pairs onto a monofilament base **15**. Specifically, each hair strand pair is hand-knotted at the junction of two monofilament cells. For example, hair strands **44**, **46** are hand-knotted together at the junction of monofilament cells **48**, **50** (FIG. **7**). A person skilled in the art would readily appreciate that more than two (e.g., three or four) hair strands may be hand-knotted together to a monofilament base during construction of the hairpiece of the present invention.

[**0032**] The single-strand and double-strand hairpiece construction of FIGS. **4**, **7** permits the hand-knotted hair strands to swivel freely on the monofilament base, which in turn allows the hairpiece of the present invention to be styled easily. The effect is a hairstyle that is more manageable, whether the user is running a comb or brush through it or simply tweaking it with his/her fingers. The hand-knotted hair strands may be easily parted and brushed in any direction, as needed.

[**0033**] The hand-knotted hair strands of the present invention may be made of synthetic fibers suitable for use in hairpiece construction. For example, the hair strands may be made of modacrylic fibers. The term "modacrylic", as used herein, generally refers to one of several synthetic, long-chain polymer textile fibers that contain 35%-85% acrylonitrile. Alternatively, the hand-knotted hair strands may be from natural hair. Various hair source combinations may be used, if desired. The hand-knotted hair strands may be of identical or different color(s) or shade(s), as needed. The density of hand-knotted hair strands on a monofilament base constructed in accordance with the present invention may vary based on the natural hair density of the person who is going to wear the hairpiece. For example, hairpiece **10** may be configured with low, medium or high hair strand density, as needed.

[**0034**] In one embodiment of the present invention, monofilament base **12** (FIG. **1**) has a slightly contoured front edge **52** (FIG. **3**). A polyurethane strip **54** is secured on top of a front portion **55** of monofilament base **12** alongside front edge **52** to add flexibility, as generally illustrated in reference to FIGS. **1**, **3**. For example, polyurethane strip **54** may be adhesively applied to front portion **55** on a bottom side **51** of monofilament base **12**. Other suitable fastening means for polyurethane strip **54** may be used, as needed.

[**0035**] Polyurethane-padded front edge **52** is shown in FIG. **3** with a plurality of hair strands **56** that are hand-knotted, one strand at a time (single knot) to monofilament base **12**. This type of hairpiece construction is defined hereby as "single strand under ventilation" in accordance with the general principles of the present invention. The term "ventilation", as generally used in the hairpiece industry, is used to describe the process of knotting individual hairs (strands) by hand into the cap (base) of a partial or full-coverage hairpiece. Hand-ventilating generally is a very time-intensive process and requires steady hands, sharp eyes, and a level of skill that may take years to master. For this reason, hand-knotted hairpieces cost substantially more than their machine-made counterparts.

[**0036**] Hair strands **56** are threaded through polyurethane strip **54** during hand-knotting. The single strand (under ventilation) hairpiece construction of FIG. **3** promotes a more natural look for front portion **55** of monofilament base **12**, in accordance with the present invention. A toupee clip **53** (FIGS. **1**, **3**) is secured to bottom side **51** of monofilament base **12** in proximity to front edge **52**. Toupee clip **53** may be stitched to monofilament base **12** at least in part through polyurethane strip **54**. Other suitable securing means for toupee clip **53** may be employed, as needed.

[**0037**] Monofilament base **12** has side edges **58**, **60** that are substantially parallel to each other. Each of side edges **58**, **60** merges gently into a substantially arcuate rear edge **62** (FIG. **1**) of monofilament base **12**. A plurality of hair strands are hand knotted at or near edges **58**, **60**, **62**. A continuous nylon strip **64** is secured alongside edges **58**, **60**, **62** over the hand-knotted hair strands on bottom side **51** of monofilament base **12** for shape retention. For example, nylon strip **64** may be stitched to bottom side **51** of monofilament base **12** alongside edges **58**, **60**, **62**, as generally illustrated in FIGS. **1**, **3**. Other fastening means for nylon strip **64** may be utilized, as needed. The terminal ends of nylon strip **64** are secured, respectively, over the flanks of polyurethane strip **54**, as generally shown in FIG. **3**.

[**0038**] A toupee clip **65** (FIG. **1**) is secured to monofilament base **12** in proximity to rear edge **62**. For example, toupee clip **65** may be stitched to monofilament base **12** at least in part through nylon strip **64** (FIG. **1**). Other suitable securing means for toupee clip **65** may be employed, as needed.

[**0039**] Toupee clips **53**, **65** help attach monofilament base **12** to a user's scalp. Other means of attaching monofilament base **12** may be utilized, provided such other attachment means do not depart from the intended purpose of the present invention. Construction of monofilament base **12** is not limited to utilization of polyurethane and/or nylon edging strips. A person skilled in the art would readily appreciate that other suitable monofilament base edging materials and/or combination of edging materials may be utilized, as needed.

[**0040**] The size of monofilament base **12** may vary based on user/manufacturer preference. In one exemplary embodiment, monofilament base **12** is approximately 2.4 inches wide and 6 inches long. Each of toupee clips **53**, **65** is about 0.75 inches wide and 1.5 inches long, with the hand-knotted hair strands being distributed substantially equally to the left and right of a center line **70** (FIG. **1**) of monofilament base **12** until about 1 inch from rear toupee clip **65** where the hair strand knots become more multi-directional similar to a half-moon spread. Other dimensions and/or hair strand knot distributions may be employed, if desired.

[**0041**] Hairpiece **10** is suitable for users who have experienced hair loss. Monofilament base **12** is comfortable to touch, easy to handle and maintain and generally unnoticeable on the scalp of a user. Hairpiece **10** is also suitable for adding fullness to parted hair styles. Hairpiece **10** has the structural integrity needed to withstand multiple applications and removals.

[0042] The exemplary embodiments described hereinabove are merely illustrative of the general principles of the present invention. Various design modifications may be employed that would reside within the scope of the invention. Thus, by way of example, but not of limitation, alternative configurations may be utilized in accordance with the teachings herein. Accordingly, the drawings and description are illustrative and not meant to be a limitation thereof.

[0043] Moreover, all terms should be interpreted in the broadest possible manner consistent with the context. In particular, the terms "comprises" and "comprising" should be interpreted as referring to elements, components, or steps in a non-exclusive manner, indicating that the referenced elements, components, or steps may be present, or utilized, or combined with other elements, components, or steps that are not expressly referenced. Thus, it is intended that the invention cover all embodiments and variations thereof as long as such embodiments and variations come within the scope of the appended claims and their equivalents.

What is claimed is:

1. A hairpiece, comprising:

a monofilament base adapted to promote airflow during use;

a plurality of hair strands hand-knotted to said monofilament base at least one hair strand at a time; and

a front edge on said monofilament base having single hair strand, single hand-knot construction to promote a natural look for said monofilament base.

2. The hairpiece of claim 1, wherein said monofilament base is substantially elongated.

3. The hairpiece of claim 2, wherein said front edge of said monofilament base is minimally contoured and padded with a strip of polyurethane material.

4. The hairpiece of claim 3, further comprising at least one front toupee clip secured to said monofilament base in proximity to said padded front edge.

5. The hairpiece of claim 4, wherein said at least one front toupee clip is secured to said monofilament base at least in part through said polyurethane strip.

6. The hairpiece of claim 5, further comprising a first side edge, a second side edge being substantially parallel to said first side edge, and a rear edge disposed between said first and second side edges.

7. The hairpiece of claim 6, wherein said rear edge has a substantially arcuate configuration.

8. The hairpiece of claim 7, wherein a continuous nylon strip is secured to said monofilament base alongside said first, second, and rear edges for shape retention.

9. The hairpiece of claim 7, wherein said continuous nylon strip is stitched to said monofilament base alongside said first, second, and rear edges.

10. The hairpiece of claim 8, further comprising at least one rear toupee clip secured to said monofilament base in proximity to said substantially arcuate rear edge.

11. The hairpiece of claim 10, wherein said at least one rear toupee clip is secured to said monofilament base at least in part through said continuous nylon strip.

12. The hairpiece of claim 8, wherein the terminal ends of said continuous nylon strip are secured to said monofilament base over the flanks of said polyurethane strip.

13. The hairpiece of claim 3, wherein said polyurethane strip is adhesively applied to said monofilament base alongside said front edge.

14. A hairpiece, comprising:

a monofilament base including a grid-like pattern of open monofilament cells adapted to promote airflow during use;

a plurality of hair strands hand-knotted in pairs to said monofilament base; and

a front edge on said monofilament base having single hair strand, single hand-knot construction to promote a natural look for said monofilament base.

15. The hairpiece of claim 14, wherein each pair of hair strands is hand-knotted at the junction of two open monofilament cells.

16. The hairpiece of claim 1, wherein said hair strands are made of synthetic fiber.

17. The hairpiece of claim 1, wherein said hair strands are made of natural hair.

18. The hairpiece of claim 1, wherein said hair strands are made of modacrylic fiber.

19. The hairpiece of claim 1, wherein said plurality of hair strands includes a combination of synthetic fiber and natural hair.

20. The hairpiece of claim 6, wherein said substantially elongated monofilament base includes a center line.

21. The hairpiece of claim 20, wherein said hand-knotted hair strands are distributed substantially equally to the left and right of said center line away from said padded front edge until a first distance from said rear edge of said monofilament base is reached.

22. The hairpiece of claim 21, wherein said hand-knotted hair strands are distributed in a substantially multi-directional fashion similar to a half-moon spread after said first distance is reached.

23. A hairpiece, comprising:

a substantially elongated monofilament base adapted to promote airflow during use;

a plurality of hair strands attached by hand-knotting to said substantially elongated monofilament base, said hair strands being hand-knotted thereon at least one strand at a time;

a first side edge on said substantially elongated monofilament base;

a second side edge on said substantially elongated monofilament base, said second side edge being substantially parallel to said first side edge;

a substantially arcuate rear edge on said substantially elongated monofilament base, said substantially arcuate rear edge being disposed between said first and second side edges; and

a minimally contoured front edge on said substantially elongated monofilament base, said minimally contoured front edge being disposed between said first and second side edges opposite said rear edge and padded to enhance hairpiece flexibility, said padded front edge provided with single-strand, single hand knot construction to promote natural look for said monofilament base.

24. A hairpiece, comprising:

a substantially elongated monofilament base having a center line, a padded front edge and a substantially arcuate rear edge; and

a plurality of hair strands attached by hand-knotting to said substantially elongated monofilament base, said hair strands being hand-knotted thereon at least one strand at a time, said padded front edge provided with single-strand, single hand knot construction to promote natural look for said monofilament base, said hand-knotted hair strands being distributed substantially equally to the left and right of said center line away from said padded front edge until a first distance from said substantially arcuate rear edge is reached, said hand-knotted hair strands being distributed in a substantially multi-directional fashion similar to a half-moon spread after said first distance is reached.

25. The hairpiece of claim 3, wherein said hair strands are threaded, one strand at a time, through said strip of polyurethane material.

26. The hairpiece of claim 8, wherein said continuous nylon strip is secured to said monofilament base over said hand-knotted hair strands.

27. The hairpiece of claim 1, wherein said monofilament base includes a grid-like pattern of open monofilament cells adapted to promote airflow.

28. The hairpiece of claim 27, wherein said at least one hair strand is looped and threaded by hand under a monofilament cell wall, said threaded hair strand including a looped portion and first and second terminal ends.

29. The hairpiece of claim 28, wherein said looped portion and said first and second terminal ends are disposed on each side of said monofilament cell wall.

30. The hairpiece of claim 29, wherein said first terminal end is threaded through said looped portion and pulled away from said second terminal end by hand to form a single hair strand knot.

* * * * *