Nov. 23, 1965 R. S. DITTO 3,218,681

MAGNETIC LEVITATION SUPPORT OF RUNNING LENGTHS

Filed March 21, 1962 3 Sheets-Sheet 1

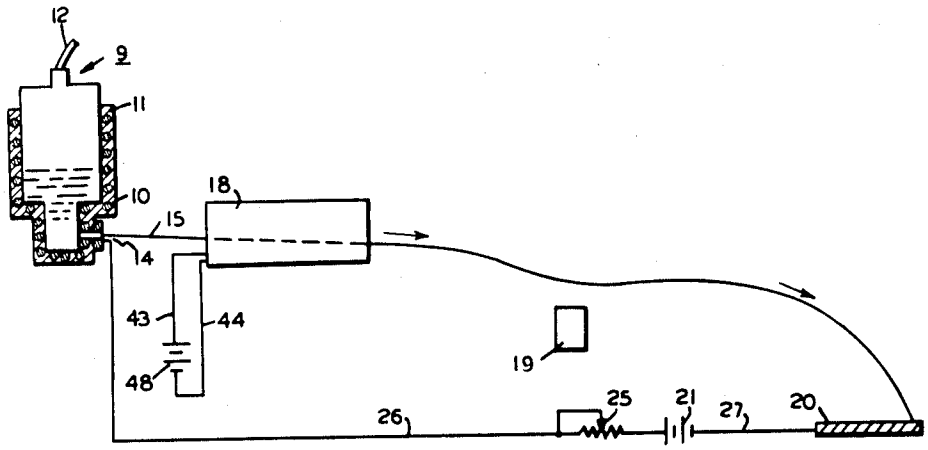

FIG.1

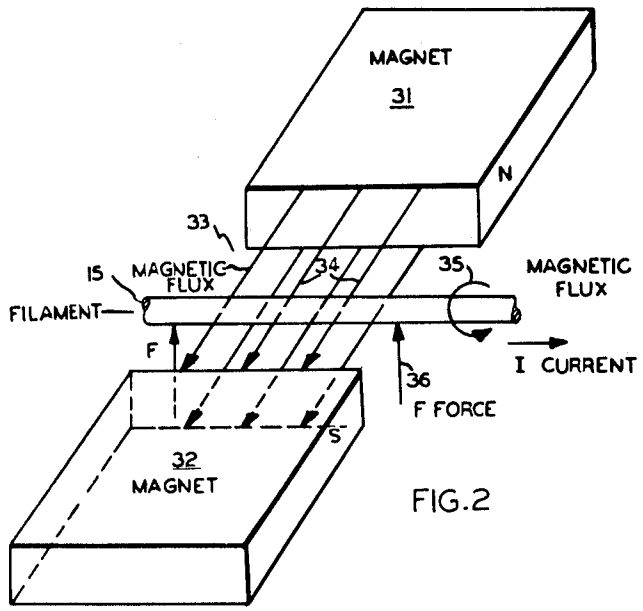

FIG.2

INVENTOR.
RICHARD S. DITTO
BY Harry J. McCauley
ATTORNEY

MAGNETIC LEVITATION SUPPORT OF RUNNING LENGTHS

Filed March 21, 1962 3 Sheets-Sheet 2

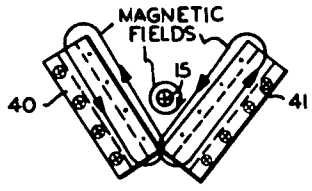

FIG.4

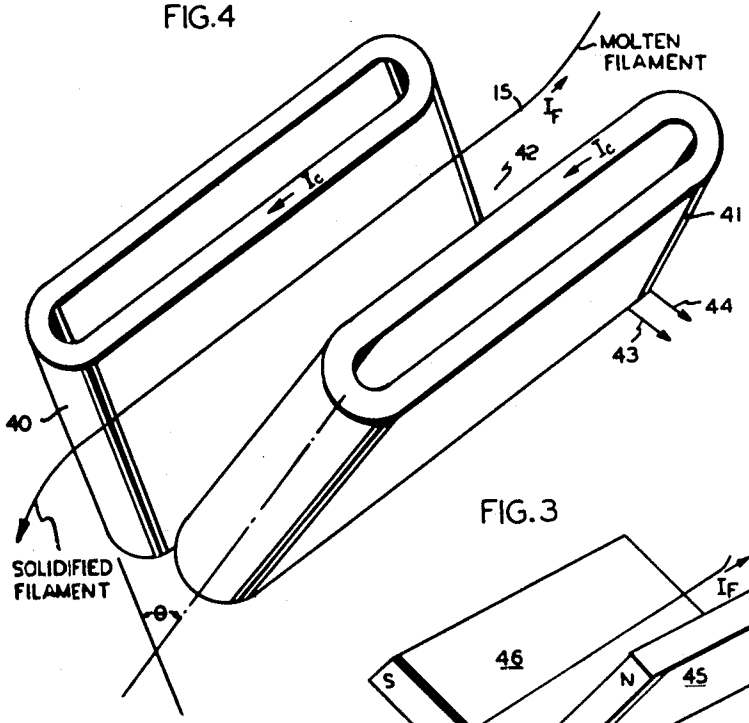

FIG.3

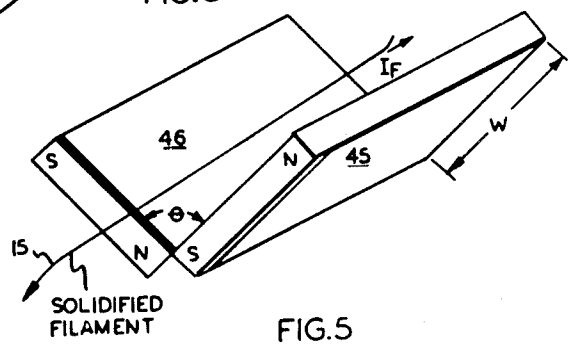

FIG.5

INVENTOR.
RICHARD S. DITTO
BY Harry J. McCauley
ATTORNEY

Nov. 23, 1965 R. S. DITTO 3,218,681

MAGNETIC LEVITATION SUPPORT OF RUNNING LENGTHS

Filed March 21, 1962 3 Sheets-Sheet 3

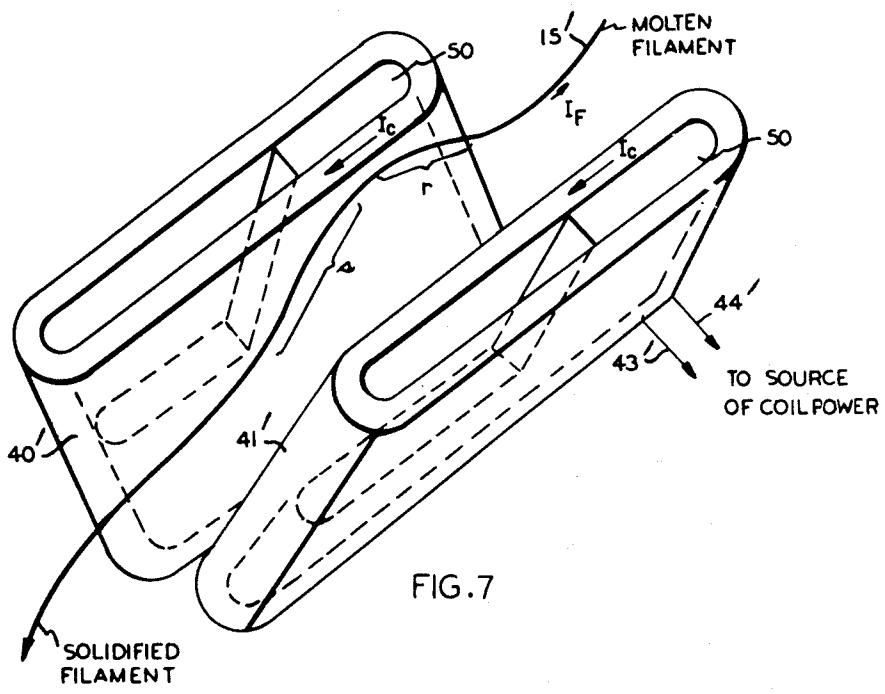

FIG. 7

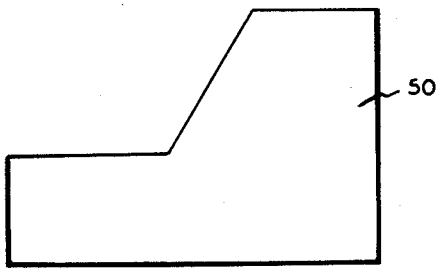

FIG. 6

INVENTOR.
RICHARD S. DITTO
BY Harry J. McCauley
ATTORNEY

United States Patent Office 3,218,681 Patented Nov. 23, 1965

3,218,681

MAGNETIC LEVITATION SUPPORT OF RUNNING LENGTHS

Richard S. Ditto, Newark, Del., assignor to E. I. du Pont de Nemours and Company, Wilmington, Del., a corporation of Delaware

Filed Mar. 21, 1962, Ser. No. 181,429
5 Claims. (Cl. 22—57.2)

This application is a continuation-in-part of U.S. application S.N. 102,090, filed April 10, 1961, now abandoned.

This invention relates to the magnetic levitation support of running lengths of electrically conductive materials, and particularly to the magnetic levitation support of materials in travel having relatively low inherent strength or cohesiveness, or which are subject to surface marring by contact with machinery or solid guides of any kind.

Magnetic levitation has heretofore been employed for the stationary support of conductive materials during the effectuation of melting under the influence of the same high frequency currents as are employed for the levitation, as described in U.S. Patent 2,686,864. Relatively high amperage A.-C. currents are required for the purposes. The present invention is concerned with the magnetic levitation support of running materials, such as metal rod and wire stock or other electrically conductive forms, metal films or foils and the like, preferably with a minimum, or practically zero concomitant heating effect and with constraint of the guided material to a precisely defined path, even under relatively high speeds of travel.

An object of this invention is the provision of a method and apparatus for the support with or without concomitant guidance by magnetic levitation of running lengths of electrically conductive material. Other objects include the provision of a magnetic levitation guidance and support system which is low in first cost and in cost of operation, dependable in practice and adapted to a relatively wide variety of industrial uses, including the spinning of electrically conductive wires, filaments and fibers from molten metal, the conveyance of foils and the like. The manner in which these and other objectives of this invention are attained will become clear from the detailed description and the following drawings, in which:

FIG. 1 is a schematic representation of a preferred embodiment of this invention applied to metal spinning,

FIG. 2 is a diagrammatic representation of the magnetic field and force relationships applicable to a length of material being supported according to this invention,

FIG. 3 is a perspective view of a preferred arrangement of solenoids utilized for the support as well as horizontal constraint of a length of material in movement thereby,

FIG. 4 is a diagrammatic end representation of the apparatus shown in FIG. 3 looking in the direction of the spinneret and showing the directions of current flow in both the solenoids and the filament,

FIG. 5 is a perspective view of a preferred arrangement similar to that of FIG. 3, but utilizing permanent magnets instead of solenoids as the levitation agency,

FIG. 6 is a side elevation view of one embodiment of shaped core which can be utilized to obtain a sloped path of filament travel, and

FIG. 7 is a perspective view of a solenoid pair provided with shaped cores of the configuration of FIG. 6, the path of filament travel obtained being drawn in.

Generally, this invention comprises a method and apparatus for the support and guidance of a running length of electrical conductor by magnetic levitation comprising displacing the electrical conductor in a generally predetermined direction and passing an electric current through the conductor while moving the conductor through a magnetic field adapted to interact with the field of the electric current passing through the conductor so as to constrain the conductor in a predetermined path.

In the most common situation the magnetic levitation support provided by this invention is proportioned so as to support substantially the weight of the electrical conductor against the force of gravity; however, the invention is not so limited but can also provide a support force of a magnitude exceeding that of gravity, to thereby displace the conductor a finite amount upwardly in a vertical plane as hereinafter described with respect to FIGS. 6 and 7.

Referring to FIG. 1, this invention is described in detail for the most difficult case, which is that in which the conductor in travel exists first in the molten state and thereafter cools to a solid which can then be handled conventionally. This is the situation for the spinning of a metal filament which is ejected in the molten state from a horizontally disposed electrically conductive spinneret **14** provided in the bottom of a furnace indicated generally at **9**, which is heated by electrical resistance heater **10** mounted within thermal lagging **11**. Ejection of the molten metal through spinneret **14** is facilitated by the application of gas pressure to the melt through port **12** in the top of the furnace, which gas can be air or relatively inert gas, such as one of the noble gases (e.g., argon), or, in certain instances, nitrogen.

The extruded filament of molten metal is represented at **15** and is, of course, so weak that it almost immediately breaks up into separate drops under the combined effects of the surface tension of the metal itself and gravity, especially for such high density materials as the metals, unless support is provided. This support is afforded according to this invention as a combined support and guidance stage **18**, followed by a support stage solely at **19** after the metal has solidified. Finally, the relatively cool, hard, strong product filament is collected as a loose mass on a metal contact plate **20**; however, it can be collected on a reel as readily, thereby dispensing with the contact plate or, in the alternative, utilizing the plate for temporary collection in conjunction with a following reel if desired.

In this instance, a D.-C. current is employed as the electric current passed through running filament **15**, and this is furnished by a conventional source **21**, which can be a 45 v. battery or the equivalent, provided with an adjusting rheostat **25**, typically 400 ohms. The electrical circuit with the molten metal is made through conductor **26** terminating in contact with electrically conductive spinneret **14**. The traveling filament **15** is itself a good electrical conductor in both the molten and solid states, so long as its continuity is preserved, thus completing the electrical circuit through to metal contact plate **20**, and thence to power source **21** through conductor **27**.

Turning now to the magnetic levitation supports themselves, that of support stage **19** is described first with reference to FIG. 2. This stage consists of a pair of flat magnets **31** and **32** disposed with dissimilar poles adjacent one another, with a gap **33** therebetween of typically ½". The magnetic flux field set up across the poles is represented at **34** for the polarities shown and, from conventional electrical principles, if the current I passes through filament **15** to the right, as seen in FIG. 2, a supportive force **36** is generated by interaction between the magnetic flux **35** surrounding the wire and field **34**. It is desirable in this instance that this force be just sufficient to counterbalance the force of gravity and any other downwardly acting forces, such as atmospheric down-drafts and the like, and this is readily accomplished by regulating the

flux density in the air gap 33 as well as the amount of current I passed through filament 15. Stage 19 as described is perfectly satisfactory for magnetic levitation support solely; however, it does permit some lateral drift between the magnet faces, which makes it desirable to use this construction only on relatively solid, coherent material, such as materials already cooled past the completely molten stage.

Stage 18, shown in FIGS. 3 and 4, is effective to provide combined guidance and support and is, accordingly, preferred for use in regions where molten or near-molten materials are in transit. In this case the co-operating flux generators are two solenoids 40 and 41 disposed so as to define a V trough 42 of included angle θ through which strand 15 passes. Typically, solenoids 40 and 41 can be 70 turn coils of copper foil measuring 3" x 0.005" insulated with 5 mil thick polyethylene terephthalate film, the whole being coated with varnish. In the apparatus employed for metal spinning as hereinafter described, the coil was wrapped around a rectangular hollow wood core measuring 2" x 3" x 15" within which was placed a rectangular soft steel (SAE 1040) core of 1.25" x 3" x 14.25" size. While iron-core coils are preferred, air-core coils can also be used. Solenoids 40 and 41 are supplied with direct current through leads 43 and 44 (shown for solenoid 41 only in FIG. 3) connecting with a D.-C. power source 48, typically 24 amperes, 5 volts. With the direction of current flow indicated for the coil currents I_C and the filament current I_F of FIG. 3, the directions of the magnetic fields generated in the vicinities of the solenoids and the filament are (looking in the direction of spinneret 14) as indicated in FIG. 4. This produces an upwardly directed force which supports the filament against the effect of gravity and, at the same time, due to the inclinations of the solenoids from the vertical, there are produced balanced horizontal components of force which constrain the filament to a quite precise path in the horizontal plane, thus adding a guidance function to that of levitation. An included angle θ of 90° between the solenoids has proved satisfactory; however, it will be understood that this can be modified widely, depending upon the degree of guidance required and other design consideration.

The magnitudes of the support forces employed in the practice of this invention are as follows for the two simplest cases involving D.-C. first and, thirdly, for the general case involving either A.C. or D.C.

Case I.—Horizontal D.C. magnetic field

Referring to FIG. 2, the D.C. current I consists of charges (electrons) Q moving with a velocity V. The magnetic flux density in the air gap of the magnets is B.

Accordingly, each charge moving in the magnetic field will experience an upwardly directed force $F=QVB$, or, over a representative element of the conductor, the force will be

$$F=Q\frac{dL}{dt}B$$

where

$$\frac{dL}{dt}=V$$

Since the Coulomb forces of attraction between the electrons and the positive ions of the conductor far exceed the external force F, the latter is effectively applied to the conductor. Differentiating,

$$dF=B\frac{dQ}{dt}dL$$

where

$$\frac{dQ}{dt}=I$$

whereupon

$$dF=IBdL$$

Thus, the total force developed on a conductor of length L in a uniform magnetic field is:

$F=-I\phi Bdl$ which, on integration, gives $F=BIL$. This, in scalar notation, is $F=BIL \sin \alpha$, where α is the angle between B and L.

Since, for most applications, $\alpha=90°$, and $\sin \alpha=1$, the equation again resolves to $F=BIL$.

Case II.—Non-horizontal D.C. magnetic field

This is the case where a D.C. current carrying conductor is disposed in a magnetic field that is at right angles to the axis of the conductor, but the field is inclined at an angle y to the horizontal.

The $F=BIL$ equation of Case I is completely applicable, except that the magnitudes of the two components F_v, the vertical force, and F_h, the horizontal force, must be taken account of.

Thus,

$$F_v=BIL \cos y$$

and

$$F_h=BIL \sin y$$

Accordingly, the total force applied to the conductor, in complex notation, is:

$$F=F_h+F_v=BIL(\sin y+j \cos y)$$

In the common case shown in FIG. 4, where both vertical and horizontal support is desired, the two solenoids 40 and 41 are so disposed with respect to each other that the F_h components cancel so long as the filament conductor is located in the vertical central plane of the coil cross section. The vertical upward force F_v decreases as the conductor moves upward into regions of decreasing flux density. As a result of these combined actions, both horizontal and vertical equilibrium positions are speedily established.

Case III.—General situation applicable to either D.-C. or A.-C. conductor current and magnetic field

The following analysis assumes no fixed angular relationship between the current carrying conductor and the magnetic field. Moreover, the current employed in the conductor and for magnetic field generation can be either D.-C., A.-C. or any combination of both, it being understood, however, that the same source is utilized for both the conductor and field circuits.

The final equation of Case I, $F=BIL \sin \alpha$, is applicable, where, for the general case postulated, the individual terms constitute

$$B=B_m \cos \omega t$$
$$I=I_m \cos(\omega t+\phi)$$

where, ω=angular frequency, t=time, and ϕ=phase angle of I relative to B, and the subscript m denotes maximum value.

Accordingly, for the general case.

$$F=(B_m \cos \omega t)[I_m \cos(\omega t+\phi)]L \sin \alpha$$

This, generalized for the further situation where the magnetic field is inclined at an angle y to the horizontal, becomes:

$$F=F_h+F_u=(B_m \cos \omega t)[I_m \cos(\omega t+\phi)]L \sin \alpha(\sin y+j \cos y)$$

or, with terms collected,

$$F=BIL[\cos \omega t \cos(\omega t+\phi) \sin \alpha][\sin y+j \cos y]$$

Inspection of this last equation shows the complete feasibility of employing an alternating field in conjunction

with an alternating current in the conductor, wherein both have the same frequency and zero phase angle. Under these circumstances the force components pulsate at a rate of 2ω. The existence of a phase angle ϕ results in negative force components as well as positive ones and, at $\phi=180°$, the forces become downwardly directed. Where D.-C. exclusively is employed, $\omega=0$ and $\phi=0$, whereupon B_m and I_m become direct continuous quantities and the equation reverts to the D.-C. Case II form.

The embodiment of stage **18** shown in FIG. 5 utilizes permanent magnets **45** and **46**, with polarities as indicated, in V arrangement as a substitute for the solenoids of FIGS. 3 and 4. The width, *w*, of such magnets can typically be 1". Such permanent magnets are equally as effective as solenoids in the accomplishment of levitation; however, they, of course, possess the disadvantage of being non-regulable in their magnetic action. Nevertheless, in installations involving high temperature service, they are preferred, since some ceramic magnets now available operate up to 600° C.

The operation of this invention is described in one example with reference to the horizontal spinning, using D.-C. with air cooling of a lead metal filament. This metal was spun with the apparatus shown in FIG. 1, the temperature of the melt in furnace **9** being maintained at about 340° C. and 10 lbs. air pressure being applied through port **12** to force the molten metal out of spinneret **14**. The bore of spinneret **14** measured 0.005" and the metal filament finally recovered from contact plate **20** measured 0.0045" diameter.

The spacing between the outer face of spinneret **14** and the adjacent face of stage **18** was about one foot, and stage **18** measured 15" long in the direction of filament travel. The flux density of stage **18** having the construction hereinbefore described was 100 gauss.

Stage **19** was 2" long and disposed 24" from the adjacent face of stage **18** and, in this instance, was of the design of FIG. 2, developing a flux density of 1000 gauss. Finally, contact plate **20**, measuring 8" x 8", was disposed with its center 9" from the adjacent face of stage **19**, and 5 feet from the outside face of spinneret **14**.

Using a current supply I of 75 ma. passed through the filament in the direction from contact plate **20** towards spinneret **14**, it was possible to spin filament at a rate of about 300 yds./min. with trajectory maintained steadily on the line course drawn in FIG. 1. At the outset, the metal filament may break up so rapidly that it will not constitute a complete electrical path. This difficulty is overcome by providing a movable metal paddle connected to plate **20** by a flexible conductor, the operator then being able to "string up" the filament by first bringing the paddle into contact with the molten metal adjacent the spinneret and then traversing it through the supportive magnetic fields in the line of travel desired, whereupon support is provided by each device in turn as represented in FIG. 1. The vertical fall of the filament over the full length of its travel was 24" and the clearance above stage **19** was 2". From visual observation it was determined that the filament was apparently solid by the time it left stage **18** in the direction of stage **19**, and that it clearly existed in the molten state for about 15" from the outside face of spinneret **14**. In contrast, when the current supplied to stage **18** was cut off, the molten stream broke into separate droplets within a distance of 12" from the spinneret, making it impossible to obtain a continuous filament product.

With steady currents applied to both solenoids and filament, and with no strong air drafts or outside disturbance, the filament seeks an equilibrium position at a point in space wherein the upward force applied to the filament by interaction of the magnetic fields, just balances the weight of the filament. Filament velocity has no effect on the stability of support; however, more precise guidance is obtained where there is laminar flow than turbulent flow. Thus, with laminar flow, the filament wandering in a transverse direction with respect to the solenoids of stage **18** is limited to about $\pm\frac{1}{4}$", whereas, with turbulent flow, the filament wandering may be as much as ± 3".

The gage uniformity of the filament product obtained from the process of this invention is good, being about 10%. The variation in gage in the specific metallic lead example reported was in large part due to the progressive clogging of the spinneret orifice by lead oxide particles that were found to have contaminated the melt. The surface of the collected lead filaments was bright, shiny and smooth. In test runs averaging 3 to 4 minutes duration unbroken filament lengths of about 1000 yards were easily obtained.

It will be understood that an I^2R heating effect is produced in filament **15** by passage of current therethrough and this heating is a factor which must be taken into account in a process such as metal spinning. Actually, the balance of air cooling against levitation current is favorable to the production of relatively large diameter wire stock using conventional solenoid or permanent magnet levitating supports. However, with stock of larger diameter, the weight of the metal in transit can become so high that the filament current required in conjunction with the usual commercially available magnet and coil accessories can be sufficient to generate enough heat in the filament to counterbalance that lost to the surrounding cool air. Under these conditions the metal remains molten and, thus, the spinning process becomes inoperable. The various conditions applicable to each metal are different and, of course, some metals can be spun in considerably larger diameters than others. It will be understood that, in some instances protracted retention of metal in the form of a molten stream suspended in contact with a gas can be desirable, as in conducting gas-metal reactions for metal purification or the like, and, accordingly, large heating current throughputs to the metal are then a positive requirement.

In another test, 60 cycle A.-C. was employed for both the conductor and the field generator currents. No particular difficulty was encountered in matching the phase angle of the solenoid power with that of the filament and the product obtained was indistinguishable in quality from that produced with D.-C. For extremely fine fibers (i.e., those less than about 1 mil diameter), a A.-C. sets up a cyclic vibration in the filament which is positively advantageous, in that it enhances the heat loss to the atmosphere.

It appears that the effective surface tension of molten metals can be drastically altered in at least some cases by the presence of oxide layers on the surface of the material, or by the presence of trace impurities. Oxidation can be readily avoided by the use of inert gas as the pressurized medium employed for forcing metal out of the spinneret and, of course, the entire apparatus of this invention can be conveniently housed within an inert atmosphere to safeguard against later-occurring oxidation.

A second apparatus was employed for yet other extrusions of continuous metal filaments, using D.C. current, wherein solenoids **40** and **41** of combined support and guidance stage **18** consisted of 110 turns of copper foil measuring 3" wide x 0.005" thick, insulated with 0.001" thick polyethylene terephthalate film and the whole coil assembly was coated with varnish. Each coil was wrapped around a hollow rectangular wood core measuring 2" x 3" x 29", within which was inserted a rectagnular soft steel (SAE 1040) core measuring 1.25" x 3" x 28.25". The extrusions were made in air at near-standard temperature conditions.

Stage **18** was spaced horizontally from spinneret **14** at various distances within the range of about 12" to 15" during the different tests hereinafter reported, the vertical drop from the spinneret to plate **20** being maintained constant at 24". Stage **19** was omitted from the apparatus during these tests.

Material Extruded	50-50 Lead-Tin Alloy			6061* Aluminum	
Spinning Temperature, ° C	200	200	200	699	600
Spinneret Orifice Diameter, Inches	0.004	0.007	0.010	0.006	0.009
Extrudate Diameter, Inches	0.0035	0.0062	0.0085	0.005	0.0076
Spinning Pressure, p.s.i.	20	20	20	40	60
Filament Velocity, yds./min.	270	220	330	800	900
Distance from Spinneret 14 to Contact Plate 20, in ft.	5	10	12	8	10
Filament Current I, amps	0.030	0.100	0.200	0.025	0.055
Solenoid Current, amps	45	45	45	25	25
Flux Density of Stage 18, in gauss	220	220	220	130	130

*A.S.T.M. Metals Handbook 8th Edition (U.S. Government Spec. No. QQA-325) nominal analysis: Mg 1.00%, Si 0.6%, Cu 0.25%, Cr 0.25%, balance Al.

In all of the tubulated spinning runs, continuous unbroken lengths of product were easily obtainable, together with better than 10% gage uniformity and good surface quality.

The foregoing description has been devoted to the guidance and levitation of a filament traveling in a straight projected path; however, this invention can be utilized to bend the course of the filament in any way desired. Thus, by a given arrangement of magnetic stages it is possible to cause the strand to take an undulatory course of travel. Moreover, if the assembly of solenoids shown in FIGS. 3 and 4 is turned about a horizontal axis to a new position lacking symmetry with respect to the vertical plane, the filament will bend in a generally horizontal plane and, in fact, can be made to make a sharp 90° turn, the filament tending to turn towards that coil or magnet which lies nearest to a horizontal position as compared with the other coil or magnet. Also, filaments have been made to follow 360° loop patterns in generally vertical planes, and helical paths of travel are likewise readily achieved.

A wide variety of magnetic field configurations adapted to obtain predetermined paths of travel of the filaments or other materials can, of course, be provided. Thus, a field generator having a solenoid width decreasing linearly from a maximum dimension adjacent the spinneret to a minimum dimension at the product collection end is effective to give a downwardly inclined path of filament travel. A convenient way of achieving this is by simply utilizing shaped iron cores for the solenoids, such as that shown in side elevation at **50** in FIG. 6. Here the core has full width for about 40% of its length on the end disposed nearest the spinneret, after which it is decreased linearly at a slope of about 45° over 20% of its length to half width, and maintained at this value for the remaining 40% of its over-all length. As shown in FIG. 7, a pair of solenoids **40'** and **41'** disposed in the same general relationship as that detailed for FIG. 3, but provided with cores shaped as shown in FIG. 6, imparts a brief rise in the travel of filament **15'** as indicated at *r*, followed by a smooth downward deflection in the region *s*, completed by horizontal travel over the balance of the course between the solenoids. A filament angle in the region *s* of about 15° measured above the horizontal contributes a hydrostatic force component applied to the molten metal which counteracts a tendency for the stream to break up into droplets under the influence of surface tension.

It will be understood that a single pair of solenoids can be utilized for the support of a multiplicity of filaments in process, so long as mutual interference therebetween during travel is safeguarded against. This can be assured by spacing the spinneret holes a sufficient distance apart so that the filaments do not contact one another, at least not during the critical molten state. It is also possible to employ a graded size of spinneret hole varying from a minimum diameter at the top to a maximum at the bottom, so that the spun filaments possess different characteristics masses and therefore travel along individual paths.

Another design advantage is that the field generators can be fabricated in unique cross sectional shapes which each possess characteristic flux distributions and thus enable the application of predetermined supportive or guidance forces at any point desired along the line of travel, as well as the securing of a smooth variation in these forces along the entire line of transit.

While the foregoing description concerns molten-solid filament support and guidance, obviously the same principles are completely applicable to the handling of all-solid films, foils or the like, obtaining the advantages of support and guidance without the necessity for physically contacting the metal in transit.

By way of distinguishing the forces applied to the electrical conductor, the force impelling the conductor through the magnetic field is referred to in the claims by the term "displacing," and this, of course, can be supplied by a combination of gravity and the pushing action of the ejected molten metal stream as in the metal spinning embodiment of this invention, or the running length can be pulled along by pinch rolls in a region where the material is in the solid phase. Such forces are vector quantities and are oriented in a predetermined direction. The forces which can be applied to the running length by the magnetic interaction are, as hereinbefore described, of an exceedingly great variety which generate, either alone or as resultant with other magnetic interactions, gravity, surface tension and the like, support forces which constrain the conductor to practically any predetermined path desired.

It will be apparent that this invention can be modified extensively within the skill of the art without departure from its essential spirit, and it is intended to be limited only by the scope of the following claims.

What is claimed is:

1. A method of spinning an electrically conductive filament comprising ejecting said filament in the molten state in a predetermined direction, passing an electric current from an extraneous source in electrical circuit with said filament through said filament and maintaining a magnetic field adjacent to said filament, the field of said electric current and said magnetic field having magnitudes and directions developing by interaction therebetween magnetic levitation support for said filament while said filament is solidifying as a result of heat loss to the surroundings.

2. A method of spinning an electrically conductive filament according to claim 1 wherein said filament within which said electric current is passed is directed along a path with respect to said magnetic field adjacent to said filament additionally developing opposed balanced horizontal force components applied to said filament substantially constraining said filament against sidewise movement in the course of transit.

3. Apparatus for spinning an electrically conductive filament comprising in combination a spinneret ejecting said filament in the molten state in a predetermined direction, means including a source of electric current establishing a completed electrical circuit through said filament and separate means generating a magnetic field in proximity to said filament of a magnitude and direction interacting with the magnetic field existing about said filament as a result of flow of electric current from said source therethrough and developing an upwardly directed force constraining said running length of said filament in a predetermined path while said filament is solidifying as a result of heat loss to the surroundings.

4. An apparatus for the support of a running length of electrical conductor by magnetic levitation comprising in combination means displacing said conductor in a generally predetermined direction, means including an extraneous source of electric current establishing a completed electrical circuit through said conductor and means generating a magnetic field in proximity to said conductor of a magnitude and direction with the interacting magnetic field existing about said conductor as a result of flow of electric current from said source therethrough and developing an upwardly directed force on said conductor

of a magnitude proportioned in extent in the direction of conductor travel constraining the path of travel thereof to a substantially predetermined shape in a vertical plane.

5. An apparatus according to claim 4 wherein said means generating said magnetic field comprise metal core solenoids wherein the metal core of each of said solenoids is shaped with a side elevational configuration generally matching said predetermined shape of said path of travel of said electrical conductor.

References Cited by the Examiner

UNITED STATES PATENTS

2,108,361	2/1938	Asakawa	18—8
2,349,950	5/1944	Formhals	18—8
2,586,046	2/1952	Huebner	22—57.2
2,664,496	12/1953	Brace	219—10.51
2,686,864	8/1954	Wroughton	22—200.1
2,879,566	3/1959	Pond	22—200.1

FOREIGN PATENTS

1,258,180	2/1961	France.

MARCUS U. LYONS, *Primary Examiner.*

WINSTON A. DOUGLAS, MICHAEL V. BRINDISI, *Examiners.*

UNITED STATES PATENT OFFICE

CERTIFICATE OF CORRECTION

Patent No. 3,218,681 November 23, 1965

Richard S. Ditto

It is hereby certified that error appears in the above numbered patent requiring correction and that the said Letters Patent should read as corrected below.

Column 4, line 68, for "F_u" read -- F_v --; column 7, line 17, for "tubulated" read -- tabulated --; column 8, line 72, for "direction with the interacting" read -- direction interacting with the --.

Signed and sealed this 13th day of December 1966.

(SEAL)
Attest:

ERNEST W. SWIDER
Attesting Officer

EDWARD J. BRENNER
Commissioner of Patents