Jan. 14, 1941. H. L. COHEN 2,228,300

CUTTING KNIFE

Filed Feb. 24, 1940

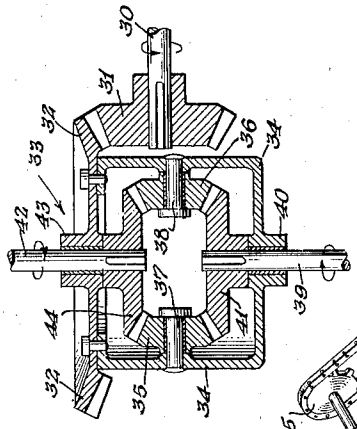

FIG. 2

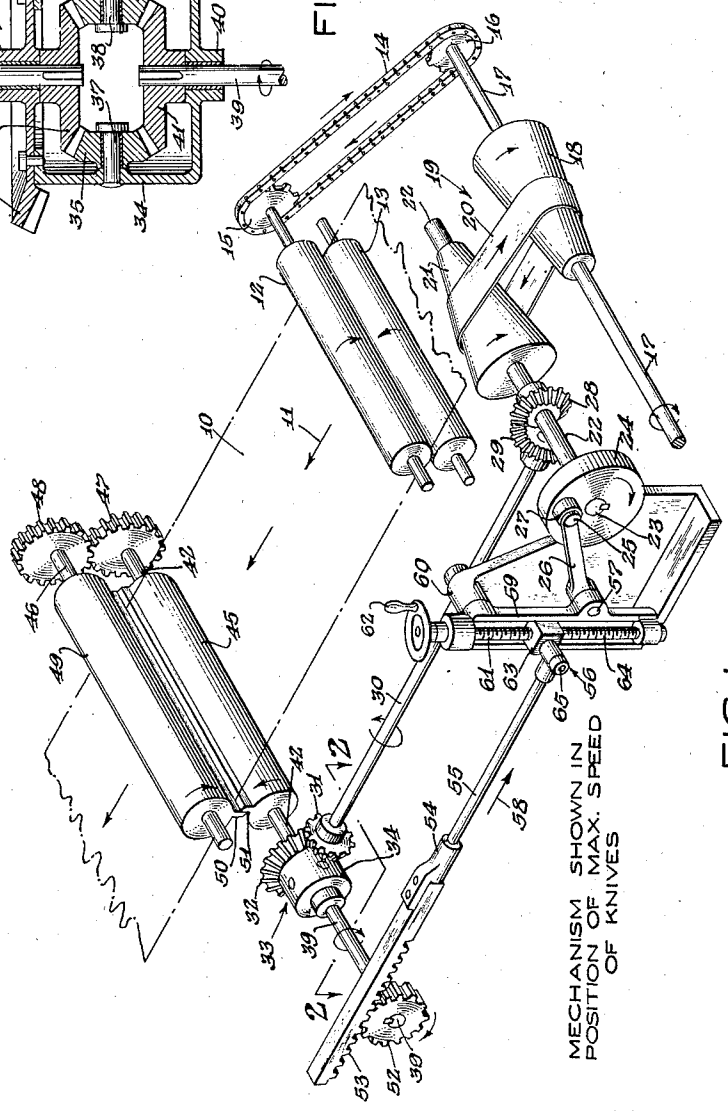

MECHANISM SHOWN IN POSITION OF MAX. SPEED OF KNIVES

FIG. 1

INVENTOR.
HARRY LOUIS COHEN.

BY Ostrolenk + Greene
ATTORNEYS.

Patented Jan. 14, 1941

2,228,300

UNITED STATES PATENT OFFICE

2,228,300

CUTTING KNIFE

Harry Louis Cohen, New York, N. Y., assignor to S. & S. Corrugated Paper Machinery Co., Inc., Brooklyn, N. Y., a corporation of New York

Application February 24, 1940, Serial No. 320,571

13 Claims. (Cl. 164—68)

This invention relates to cutting knives and more particularly to synchronously operated knives adapted to cooperate with a continuous web moving at a constant speed and arranged to cut sheets of predetermined length without interfering with the continuous movement of the web and irrespective of the average circumferential speed of the knife.

For this latter purpose, this invention also relates to the means for varying the circumferential speed of rotating knives during a cycle thereof so that while the average circumferential speed may be different from the linear speed of a continuous web with which the knife cooperates, the circumferential speed during the period when the cutting operation takes place will be the same as the linear speed of the web.

Ordinarily where sheets of only one particular length are to be cut from a continuously moving web, the circumference and speed of rotation of the knife drum may be so arranged that the circumferential speed of the knife blade will always be equal to the linear speed of the continuous web. The knife blade meets the web once during each revolution, effecting the cutting operation as it passes along with the web at the speed of the web, and then meeting the web once more at a distance from the original cut equal to the length of sheet desired.

The problems of adjustment of circumferential speed of the knife during a single revolution thereof so that the knife will be moving at the speed of the paper during the actual cutting operation and so that the average speed of rotation of the knife drum may be such as to give the predetermined sheet length which will not necessarily be that produced by ordinary pure synchronous rotation of the knife drum have been solved in various different ways.

Thus, for instance, the shaft transmitting power to the knife drum has not been connected directly to the knife drum itself but a device producing an eccentric type of connection has been used in order that the effective radius of rotation of the power transmission shaft be varied once during a particular revolution of the knife drum. This has been accomplished, for instance, by the crank and bifurcated arrangement shown in Patent No. 2,208,350 or by the quadric chain arrangement shown therein or by other means such as that shown in application Ser. No. 318,294.

Although the differential gearing arrangement is commonly known and understood, nowhere in the prior art or in the industry has there been any demonstration or teaching of the use thereof in connection with rotating knives, the speed of rotation of which may be varied with respect to the continuously moving web in order to obtain cut off sheets of different lengths (the speed of the knife drum being varied so that it will be exactly that of the continuously moving web during the cutting operation). The combination and use of differential gearing arrangements in order to achieve this purpose and the connection of the various members therethrough for this purpose is distinctly novel and advantageous. Such use of the differential gearing arrangement has at least one distinct advantage in that it involves the use of a member, the manufacture of which and the attributes of which are well known and understood.

Consequently in the manufacture of this device there will be no substantial unsolved problems with relation to the construction of the differential itself. It is the placement of the differential mechanism in a particular position with relation to the cutting knives and the speed changing mechanism which constitutes the invention and not the differential mechanism by itself.

Objects of this invention therefore are to provide in a knife cutter a means for varying the speed of rotation of the knife drum cyclically during each revolution.

Still another object of this invention is to provide in a rotating knife cutting mechanism which is to be used to cut sheets of differing lengths from a continuously moving web moving at a constant speed, means for varying the average speed of rotation of the knife drums in order to obtain sheets of different lengths and means for varying the speed of rotation of the knife drums once during each revolution so that during the period in which the knife or knives are engaged with the continuously moving web, the knives will be moving substantially at the speed of the web.

A still further object of this present invention is to utilize a differential gearing arrangement for the purpose of obtaining a variation in the speed of rotation of the knife drum once during each revolution.

Another object of this invention is to provide a differential gearing arrangement for effecting the result herein mentioned, the primary gear of said differential gearing arrangement being under the control of the mechanism which changes the average speed of rotation of the knife drums.

Still another object of this invention is to provide a means for periodically varying the relative speed of rotation of the gears of the differential gearing mechanism in order to obtain a cyclic variation in speed of the rotation of the knife drums.

Other objects and uses of this invention will in part be apparent and in part be pointed out in connection with the following description and drawing, in which:

Figure 1 is a schematic view in perspective showing the general operation of my machine.

Figure 2 is a cross-sectional view taken in plane 2—2 of Figure 1 looking in the direction of the arrows.

The continuously moving web 10 of corrugated board, fibrous or paper board or any other sheet material is fed at constant speed in the direction indicated by the arrow 11 by the feed rollers 12 and 13. The feed rollers 12 and 13 are operated through the chain 14 and sprocket 15, the chain being operated by the sprocket 16 attached to and rotating with the shaft 17, the said shaft 17 being connected to the source of power.

The feed may be effected by the roll 12 alone pressing against the roll 13 or the feed rollers 12 and 13 may be interconnected by any suitable gearing arrangement in order to apply direct forward motive power to the web 10 on both its upper and under surfaces. One of the cones 18 of a "Reeves" drive 19 is fixedly mounted on the power shaft 17 and rotates therewith.

Belt 20 connects the cone 18 of the "Reeves" drive 19 to the cone 21 of the said "Reeves" drive, the cone 21 being keyed to the shaft 22. The shaft 22 terminates at 23 in a disk 24 which is keyed to the shaft 22 and rotates therewith. The disk 24 carries a pin 25 non-centrally mounted thereon. Link 26 is rotatably attached to the pin 25 by means of the collar 27 so that rotation of the disk 24 and consequent rotation of the pin 25 will cause the link 26 to oscillate in the manner and for the purpose hereinafter described.

It should be noted that any eccentric mounting of the pin 25 with respect to the shaft 22 will serve the same purpose as the mounting thereof on the disk 24. Thus the pin 25 may be the terminal of a crank member mounted thereon or it may be eccentrically mounted with respect to its shaft in any other suitable manner. Likewise the pin mounting 25 may, if desired, be an adjustable one, that is, it may be so mounted as to be slidable towards or away from the center of rotation of the shaft 22. For this purpose, the pin may be mounted in a slot of the disk or of a crank keyed to the end of the shaft and releasably secured in any predetermined position on such slot as, for instance, by bolts or flanged nuts.

Bevel gear 28 is keyed to the shaft 22 and rotating therewith meshes with bevel gear 29 so that the rotation of shaft 22 results in the rotation of shaft 30 which in turn through bevel gear 31 keyed to the oppposite end thereof rotates the primary gear 32 of the differential gearing arrangement 33 and thereby causes a rotation of the housing 34 of the differential gearing arrangement (see also Figure 2).

As seen in Figure 2, the housing 34 of the differential gearing arrangement 33 has two bevel gears 35 and 36 rotatably mounted therein on pins 37 and 38 which are connected to and rotate with the housing. Shaft 39 (Figures 1 and 2) extends through the bearing 40 into the housing 34 in such manner that the housing 34 may rotate about the shaft 39. Shaft 39 is keyed to bevel gear 41 which is enmeshed with bevel gears 35 and 36. Likewise shaft 42 extends through the bearing 43 in the housing 34 in such manner that the housing may rotate with respect to the shaft 42. The shaft 42 is keyed to the bevel gear 44 which also is enmeshed on the opposite side with the bevel gears 35 and 36.

Assuming now that shaft 39 is held stationary so that bevel gear 41 is stationary then rotation of shaft 30 will through bevel gear 31 result in rotation of bevel gear 32 which in turn will result in rotation of the housing 34. The rotation of the housing 34 will carry the bevel gears 35 and 36 around with it, the bevel gears 35 and 36 being rotatably mounted also with respect to the housing and on an axis at right angles to the axis of rotation thereof. Consequently if the shaft 39 is held stationary so that the bevel gear 41 is held stationary, then rotation of the housing 34 will cause the bevel gears 35 and 36 to rotate about their own pins or axis 37 or 38 by reason of their continuous displacement with respect to the bevel gear 41.

However, if bevel gears 36 and 35 are thus forced to rotate, they will, by reason of the fact that they are enmeshed with the bevel gear 44, cause the said bevel gear to rotate as well. The rotation of bevel gear 44 will result in rotation of the shaft 42 which in turn will result in rotation of the knife drum 45. The shaft 42 drives shaft 46 through the gears 47 and 48 so that rotation of shaft 42 will also result in rotation of knife drum 49 which is keyed to shaft 46. As hereinabove described, therefore, the rotation of the power shaft 17 will through the "Reeves" drive 19 cause a rotation of the shaft 22 which through bevel gears 28 and 29 will cause the rotation of the shaft 30, which through the bevel gear 31 and the differential gearing arrangement 33 will result in rotation of the knife drums.

Movement of the belt 20 of the "Reeves" drive 19 in either direction will result in a speeding up or slowing down of the shaft 22 in a manner which is now well known in the art. Consequently movement of the belt 20 in either direction and by any suitable means will cause a variation in the speed of rotation of the knife drums 49 and 45. Such variation in speed of rotation of the knife drums 49 and 45 is for the purpose of varying the length of each individual sheet cut from the moving web 10. The reason that the speed of rotation of the knife drums is preferably varied for different lengths of cut-offs rather than the speed of linear movement of the web is that frequently the cutting operation is made as the web is led from the various manufacturing processes in which it was formed. Since the web is delivered from the final step of such forming or manufacturing processes at a constant speed, which cannot readily be varied without changing many of the prior manufacturing processes, it becomes simpler to drive the web 10 directly from the power shaft 17, using any suitable gear ratio to maintain the desired speed at a constant unvarying level.

The "Reeves" drive 19 and the adjustment thereof may be used, however, to vary the speed of rotation of the knife drums in order to vary the length of cut-off. Thus, for instance, when the sheet as it leaves the manufacturing process is travelling at 120 inches per minute, then in order to obtain a sheet of 120 inches in length, the knife drum should revolve once per minute. In order to obtain a series of thirty-inch sheets,

the knife drum should revolve four times per minute. The knife drums, it will be noted, are preferably of a fixed diameter. Consequently, when variations in speed of the knife drums are introduced, unless corrections are made at some time during the revolution of the knife drum, the knife drum will not be travelling at the same speed as the paper during the cutting operation. While the cutting operation is relatively fast, nevertheless the action usually is a shearing action in which different points on the knife blades are progressively in engagement with the sheet so that the knives are in engagement with the sheet not merely at a particular instant of time but over an appreciable though relatively short period so that if the knife blades **50** and **51** mounted on the drums **45** and **49** are not travelling at the speed of the sheet **10** during the cutting operation, tearing or deformation of the sheet **10** will occur.

It therefore becomes beneficial to vary the speed of the knife drum during each revolution so that at the moment of cutting, the knife drum will be revolving so that the circumferential speed of the blades **50** and **51** will equal the linear speed of the paper while the speed of the knife drums may be otherwise varied during the balance of the rotation so that the average speed of rotation of the knife drums will be that desired for the production of the sheet of selected length.

For this reason, the shaft **39** which is keyed to the bevel gear **41** (Figures 1 and 2) is not held in fixed relation (which was the position assumed for purposes of explanation hereinabove) but it is so arranged that it may be periodically rotated first in one direction and then in the other in order to vary the speed of the knife drum in accordance with the speed of the paper.

Shaft **39** carries at the opposite end from bevel gear **41** gear **52** which is keyed thereto and rotates therewith. Rack **53** bears on gear wheel **52** and is enmeshed therewith so that a movement of the rack **53** will result in rotation of the gear wheel **52** and in consequent rotation of the shaft **39** and of the bevel gear **41**. Rack **53** is connected by the flexible coupling **54** to the rod **55**, and, through the adjustable mechanism **56** hereinafter described, pivotally connected by the pin **57** to the link **26**. It will be seen now that as the shaft **22** rotates, each rotation thereof by reason of the fact that bevel gears **28** and **29** are in one to one ratio result in a single rotation of the shaft **30**. Likewise, each rotation thereof results in a single rotation of the disk **24** and consequently of the pin **25**. Likewise, bevel gear **31** and bevel gear **44** are in one to one ratio so that each rotation of shaft **22** results in a single rotation of the knife drum.

Pin **25** rotates once for each revolution of the knife drum. When the pin **25** is in the position shown, it is, through the link **26**, the pin **57**, the adjustable mechanism **56**, the rod **55** and couple **54**, pulling the rack **53** in the direction shown by the arrow **58**. Such movement of the rack **53** causes a rotation of the gear **52** resulting in a corresponding rotation of the shaft **39** which results in a corresponding rotation of the bevel gear **41**.

The bevel gear **41** is thus rotated in a direction opposite to that in which the housing **34** is being rotated and consequently causes the bevel gears **35** and **36** attached to the housing to rotate more rapidly, consequently causing a faster rotation of the knife drums **49** and **45**.

The distance of the pin **25** from the center of the shaft **22** is so adjusted that when the pin **25** is in the position shown in Figure 1, and the knife blades **50** and **51** are in engagement as shown, the knife blades are caused to travel at the speed of the paper.

When the pin **25** has moved 90° further in its rotation, then the rack **53** will have momentarily come to rest and consequent rotation of the shaft **39** will have momentarily ceased, the rotation of bevel gear **41** will have momentarily ceased, and the consequent rotation of shaft **42** and the driving drums will have returned momentarily to the normal average speed. When the pin **25** will have moved 90° further to a position 180° removed from the position shown in the figure, then the rack **53** will have been forced in the other direction resulting in the rotation of the shaft **39** and the bevel gear **41** in the opposite direction, thus resulting in a slowing down of the rotation of the shaft **42** and the knife drums, this slowing down being exactly equal to the amount by which the knife **42** and the drums have been speeded up so that the predetermined average speed will have been maintained in order to obtain sheets of the selected length while the knife drums will have been permitted to travel at the speed of the moving web during the moment of cutting.

As previously pointed out, the pin **25** may be made adjustable with respect to the center of rotation of the shaft **22** in order to obtain finer variations in the speed changes. The adjustable mechanism **56** may also be used. The adjustable mechanism **56** comprises a housing **59** pivotally mounted at **60** and freely rotatable thereat. The housing **59** carries the screw **61** rotatably mounted therein but not axially movable with respect thereto. Rotation of handle **62** will cause a rotation of the screw **61**. The nut **63** is mounted in threaded engagement with the screw **61** so that rotation of the screw **61** by the handle **62** will cause the nut **63** to travel along the screw **61**, particularly since the bolt **63** is prevented from rotation with respect to the housing **59** by reason of the fact that it rides in the groove **64**.

The rod **55** is pivotally connected to the nut **63** by the pin **65**. It will now be seen that rotation of the pin **25** will result in oscillatory movement of the link **26** which through the pivoted mounting **57** will result in an oscillatory pendulum like motion of the housing **59** around the rotatable mounting **60** as a fulcrum. Such oscillatory motion of the housing **59** will result in a corresponding oscillatory motion of the nut **63** which in turn will result in oscillatory motion of the rod **55** and rack **53** for the purpose of causing the shaft **39** and the bevel gear **41** to rotate first in one direction and then in the opposite direction for the reasons hereinabove described.

It should be noted that disk **25** and pin **25** (virtually constituting a single crank member), link **26**, housing **59** and rod **55** virtually constitute a quadric chain, variation in the adjustment of one of the elements of which will result in a variation in the motion transmitted from the first element to the last element of the quadric chain.

Thus, adjustment of the position of the nut **63** on the bolt **61** and within the housing **59** by means of the handle **62** will result in a variation of the relative speed of movement of the rack **53** in order to adjust the speed of rotation of the knife drums so that during the cutting period

it will be equal to that of the linearly moving web 10.

It should be noted that, in the figures, the type of adjustment shown is that for cutting sheets equal in length to the circumferential length of the knife drums or of the greater length. That is, when the nut 63 is adjusted so that the pin 65 is axially aligned with the rotatable mounting 60, then no cyclic variation of speed of rotation of the knife drums will occur, and the machine is set to cut sheets, of a length equal to the circumferential length of the knife drums. Virtually the same result is obtained by making the mounting of the pin 25 adjustable; the knives then being arranged to cut sheets of a length equal to the circumference of the knife mountings when the pin 25 is adjusted to be axially aligned with shaft 22.

If the machine is to be arranged to cut sheets of lesser length than the effective circumferential length of the knife drums, then the housing 59 and screw 61 should be arranged to extend beyond and above the rotatable mounting 60; so that the nut 63 may be adjusted beyond said rotatable mounting 60 by a distance sufficient to obtain the desired length of the sheet. Or, in the alternative, the pin 25, if adjustable, should be arranged to be adjusted beyond the shaft 22. In each case, the effect would be to reverse the oscillation of the housing 59 and obtain a slowing down of the knife drum where it would otherwise be speeded up and vice versa. This, in effect, would be the same result as if the positions of the knives in Figure 1 were shifted 180° while the balance of the figure remained the same, and, if desired, the machine may be arranged to permit such a shifting of the knife drums, where the provision of the foregoing extended adjustments is not desired, either by reason of the improbability of the necessity therefore or for any other reason.

By this means, therefore, the knife drums may be adjusted to cut sheets of any length, whether greater than their circumferential length or less.

The operation of my machine has been set forth in connection with the foregoing description, the operation of each of the elements having been described in connection with the structure thereof. In general, it may be said that the speed of revolution of the knife drums for the purpose of varying the size of the sheet to be cut may be varied by adjustments of the "Reeves" drive. This relates only to the average speed, however. There is superimposed upon this average speed, a cyclical variation which results from the oscillatory motion induced from pin 25 into the rack 53 which causes variations through the differential gearing arrangement in the manner hereinabove described of the speed of rotation of the shaft 42 which controls the knife drums.

Where the knife drums are through the "Reeves" drive adjusted to rotate at a speed different from that of the linear movement of the web, then the handle 62 may be rotated to a position in which the movement of the rack 53 during the moment of cutting is such that the speed induced in the knife drums at that moment is equal to that of the web, the average speed of rotation of the knife drums being maintained by a corresponding slowing down or speeding up of the knife drums when the knife blades have travelled through 180°.

It will be obvious of course that this device may have many uses in the cutting of constantly moving sheet material. It will also be clear that an integral adjustment may be arranged for the belt 20 of the "Reeves" drive 19 and the handle 62 so that movement of one will result in a corresponding rotation or movement of the other to integrate the movement of the rack 53 with the speed of rotation of the knife drums, in such a manner that variation in one will induce corresponding variations in the other in order to prevent disruption of the sheet during cutting operations.

In the foregoing description, I have set forth my invention by illustrations which are to be regarded merely by way of example. Obviously this invention may be practiced in many different ways and may have many uses not herein specifically set forth which will be clear to those skilled in the art. I therefore prefer to be limited not by the description herein, but only by the appended claims..

I claim:

1. A mechanism for cutting constantly moving sheet material into successive strips of predetermined length comprising a knife mounted on a rotatable shaft and cyclically engageable with said sheet; a differential gear mechanism; a source of power connected to and rotating the housing of said differential gear mechanism, said shaft terminating in a first gear forming part of the differential gear mechanism; a second gear within the differential gear mechanism; rotation of the housing causing rotation of said shaft; and means for rotating said second gear first in one direction and then in the opposite direction during each revolution of said knife shaft to cause cyclic variation in speed thereof.

2. A mechanism for cutting constantly moving sheet material into successive strips of predetermined length comprising a knife mounted on a rotatable shaft and cyclically engageable with said sheet; a differential gear mechanism; a source of power connected to and rotating the housing of said differential gear mechanism, said shaft terminating in a first gear forming part of the differential gear mechanism; a second gear within the differential gear mechanism, said gears being rotatably mounted with respect to the housing and with respect to each other, and being each engaged with idler gears mounted on shafts attached to the housing; rotation of the housing causing rotation of said shaft; and means for rotating said second gear first in one direction and then in the opposite direction during each revolution of said knife shaft to cause cyclic variation in speed thereof.

3. A mechanism for cutting constantly moving sheet material into successive strips of predetermined length comprising a knife mounted on a rotatable shaft and cyclically engageable with said sheet; a differential gear mechanism; a source of power connected to and rotating the housing of said differential gear mechanism, said shaft terminating in a first gear forming part of the differential gear mechanism; a second gear within the differential gear mechanism; said gears being rotatably mounted with respect to the housing and with respect to each other, and being each engaged with idler gears mounted on shafts attached to the housing, rotation of the housing resulting in rotation of the shafts of said idlers in a plane normal to their diameters; means for controlling the rotation of said second gear thereby causing said housing and idlers to rotate said first gear, said means including members for rotating said second gear first in one direction and then in the other op-

posite direction during each revolution of said knife shaft to cause cyclic variation in speed thereof.

4. A mechanism for cutting constantly moving sheet material into successive strips of predetermined length comprising a knife mounted on a rotatable shaft and cyclically engageable with said sheet; a differential gear mechanism; a source of power connected to and rotating the housing of said differential gear mechanism, said shaft terminating in a first gear forming part of the differential gear mechanism; a second gear within the differential gear mechanism; rotation of the housing causing rotation of said shaft; and means for rotating said second gear first in one direction and then in the opposite direction during each revolution of said knife shaft to cause cyclic variation in speed thereof, said means comprising a shaft, said second gear being mounted at one end of said shaft; a third gear mounted on said shaft; a rack engaging said third gear; said rack oscillating and completing one period of oscillation during each revolution of the knife shaft.

5. A mechanism for cutting constantly moving sheet material into successive strips of predetermined length comprising a knife mounted on a rotatable shaft and cyclically engageable with said sheet; a differential gear mechanism; a source of power connected to and rotating the housing of said differential gear mechanism, said shaft terminating in a first gear forming part of the differential gear mechanism; a second gear within the differential gear mechanism; said gears being rotatably mounted with respect to the housing and with respect to each other, and being each engaged with idler gears mounted on shafts attached to the housing, rotation of the housing resulting in rotation of the shafts of said idlers in a plane normal to their diameters; means for controlling the rotation of said second gear thereby causing said housing and idlers to rotate said first gear, said means including members for rotating said second gear first in one direction and then in the opposite direction during each revolution of said knife shaft to cause cyclic variation in speed thereof, said means comprising a shaft, said second gear being mounted at one end of said shaft; a third gear mounted on said shaft; a rack engaging said third gear; said rack oscillating and completing one period of oscillation during each revolution of the knife shaft.

6. A mechanism for cutting constantly moving sheet material into successive strips of predetermined length comprising a knife mounted on a rotatable shaft and cyclically engageable with said sheet; a differential gear mechanism; a source of power connected to and rotating the housing of said differential gear mechanism, said shaft terminating in a first gear forming part of the differential gear mechanism; a second gear within the differential gear mechanism; rotation of the housing causing rotation of said shaft; means for rotating said second gear first in one direction and then in the opposite direction during each revolution of said knife shaft to cause cyclic variation in speed thereof; said means comprising a shaft, said second gear being mounted at one end of said shaft; a third gear mounted on said shaft; and a rack engaging said third gear; said rack being coupled to an oscillating member, said oscillating member completing one period of oscillation during each revolution of the knife shaft.

7. A mechanism for cutting constantly moving sheet material into successive strips of predetermined length comprising a knife mounted on a rotatable shaft and cyclically engageable with said sheet; a differential gear mechanism; a source of power connected to and rotating the housing of said differential gear mechanism; said shaft terminating in a first gear forming part of the differential gear mechanism; a second gear within the differential gear mechanism; rotation of the housing causing rotation of said shaft; means for rotating said second gear first in one direction and then in the opposite direction during each revolution of said knife shaft to cause cyclic variation in speed thereof; said means comprising a shaft, said second gear being mounted at one end of said shaft; a third gear mounted on said shaft; and a rack engaging said third gear; said rack being coupled to an oscillating member, said oscillating member comprising a shaft, and a housing pivotally mounted thereon, said coupling to said rack being adjustable with respect to said shaft, said oscillating member completing one period of oscillation during each revolution of the knife shaft.

8. A mechanism for cutting constantly moving sheet material into successive strips of predetermined length comprising a knife mounted on a rotatable shaft and cyclically engageable with said sheet; a differential gear mechanism; a source of power connected to and rotating the housing of said differential gear mechanism; said shaft terminating in a first gear forming part of the differential gear mechanism; a second gear within the differential gear mechanism; rotation of the housing causing rotation of said shaft; means for rotating said second gear first in one direction and then in the opposite direction during each revolution of said knife shaft to cause cyclic variation in speed thereof; said means comprising a shaft, said second gear being mounted at one end of said shaft; a third gear mounted on said shaft; and a rack engaging said third gear; said rack being coupled to an oscillating member, said oscillating member comprising a shaft, and a housing pivotally mounted thereon, said coupling to said rack being adjustable with respect to said shaft, said oscillating member being connected by a link to the source of power of said knife shaft and completing one period of oscillation during each revolution of the knife shaft.

9. A mechanism for cutting constantly moving sheet material into successive strips of predetermined length comprising a knife mounted on a rotatable shaft and cyclically engageable with said sheet; a differential gear mechanism; a source of power connected to and rotating the housing of said differential gear mechanism; said shaft terminating in a first gear forming part of the differential gear mechanism; a second gear within the differential gear mechanism; rotation of the housing causing rotation of said shaft; means for rotating said second gear first in one direction and then in the opposite direction during each revolution of said knife shaft to cause cyclic variation in speed thereof; said means comprising a shaft, said second gear being mounted at one end of said shaft; a third gear mounted on said shaft; and a rack engaging said third gear; said rack being coupled to an oscillating member, said oscillating member comprising a shaft, and a housing pivotally mounted thereon, said coupling to said rack being adjustable with

respect to said shaft, said oscillating member being connected by a link to the source of power of said knife shaft and completing one period of oscillation during each revolution of the knife shaft; said source of power comprising a shaft rotating at the speed of said knife shaft, said latter shaft carrying a member rotating about the center thereof, said link being connected thereto.

10. A mechanism for cutting constantly moving sheet material into successive strips of predetermined length comprising a knife mounted on a rotatable shaft and cyclically engageable with said sheet; a differential gear mechanism; a source of power connected to and rotating the housing of said differential gear mechanism; said shaft terminating in a first gear forming part of the differential gear mechanism; a second gear within the differential gear mechanism rotation of the housing causing rotation of said shaft; means for rotating said second gear first in one direction and then in the opposite direction during each revolution of said knife shaft to cause cyclic variation in speed thereof; said means comprising a shaft, said second gear being mounted at one end of said shaft; a third gear mounted on said shaft; and a rack engaging said third gear; said rack being coupled to an oscillating member, said oscillating member comprising a shaft, and a housing pivotally mounted thereon, said coupling to said rack being adjustable with respect to said shaft, said oscillating member being connected by a link to the source of power of said knife shaft and completing one period of oscillation during each revolution of the knife shaft; said source of power comprising a shaft rotating at the speed of said knife shaft, said latter shaft carrying a member rotating about the center thereof, said link being connected thereto, said last mentioned member being adjustable with respect to its distance from the center of rotation of said latter shaft.

11. A mechanism for cutting constantly moving sheet material into successive strips of predetermined length comprising a knife mounted on a rotatable shaft and cyclically engageable with said sheet; a speed changing mechanism; a source of power connected to and driving said shaft through said speed changing mechanism; and means for varying one setting of said speed changing mechanism during each cycle of said knife; said means comprising an oscillating member and a connection between said oscillating member and said speed changing mechanism; movement of said connection effecting adjustment of the speed changing mechanism; said oscillating member comprising a shaft and a housing pivotally mounted thereon; said connection between said oscillating member and said speed changing mechanism being adjustable with respect to the shaft; said oscillating member being connected by a link to the source of power of said knife shaft and completing one period of oscillation during each revolution of the knife shaft; said source of power comprising a shaft rotating at the speed of said knife shaft, said latter shaft carrying a member rotating about the center thereof, said link being connected thereto.

12. A mechanism for cutting constantly moving sheet material into successive strips of predetermined length comprising a knife mounted on a rotatable shaft and cyclically engageable with said sheet; a speed changing mechanism; a source of power connected to and driving said shaft through said speed changing mechanism; and means for varying one setting of said speed changing mechanism during each cycle of said knife; said means comprising an oscillating member and a connection between said oscillating member and said speed changing mechanism; movement of said connection effecting adjustment of the speed changing mechanism; said oscillating member comprising a shaft and a housing pivotally mounted thereon; said connection between said oscillating member and said speed changing mechanism being adjustable with respect to the shaft; an adjustment member carried by said housing, said connection between said oscillating member and said speed changing mechanism being connected to said adjustment member, operation of said adjustment member changing the position of said connection with respect to the oscillating member shaft; said oscillating member being connected by a link to the source of power of said knife shaft and completing one period of oscillation during each revolution of the knife shaft; said source of power comprising a shaft rotating at the speed of said knife shaft, said latter shaft carrying a member rotating about the center thereof, said link being connected thereto.

13. A mechanism for cutting constantly moving sheet material into successive strips of predetermined length comprising a knife mounted on a rotatable shaft and cyclically engageable with said sheet; a speed changing mechanism; a source of power connected to and driving said shaft through said speed changing mechanism; and means for varying one setting of said speed changing mechanism during each cycle of said knife; said means comprising an oscillating member and a connection between said oscillating member and said speed changing mechanism; movement of said connection effecting adjustment of the speed changing mechanism; said oscillating member comprising a shaft and a housing pivotally mounted thereon; said connection between said oscillating member and said speed changing mechanism being adjustable with respect to the shaft; a screw carried by said housing, said connection between said oscillating member and said speed changing mechanism being connected to said screw, rotation of said screw changing the position of said connection with respect to the oscillating member shaft; said oscillating member being connected by a link to the source of power of said knife shaft and completing one period of oscillation during each revolution of the knife shaft; said source of power comprising a shaft rotating at the speed of said knife shaft, said latter shaft carrying a member rotating about the center thereof, said link being connected thereto.

HARRY LOUIS COHEN.