April 5, 1938. M. G. CROSBY 2,112,881

FREQUENCY MULTIPLICATION PHASE MODULATION RECEIVER

Filed Dec. 28, 1933 2 Sheets-Sheet 1

Fig. 1

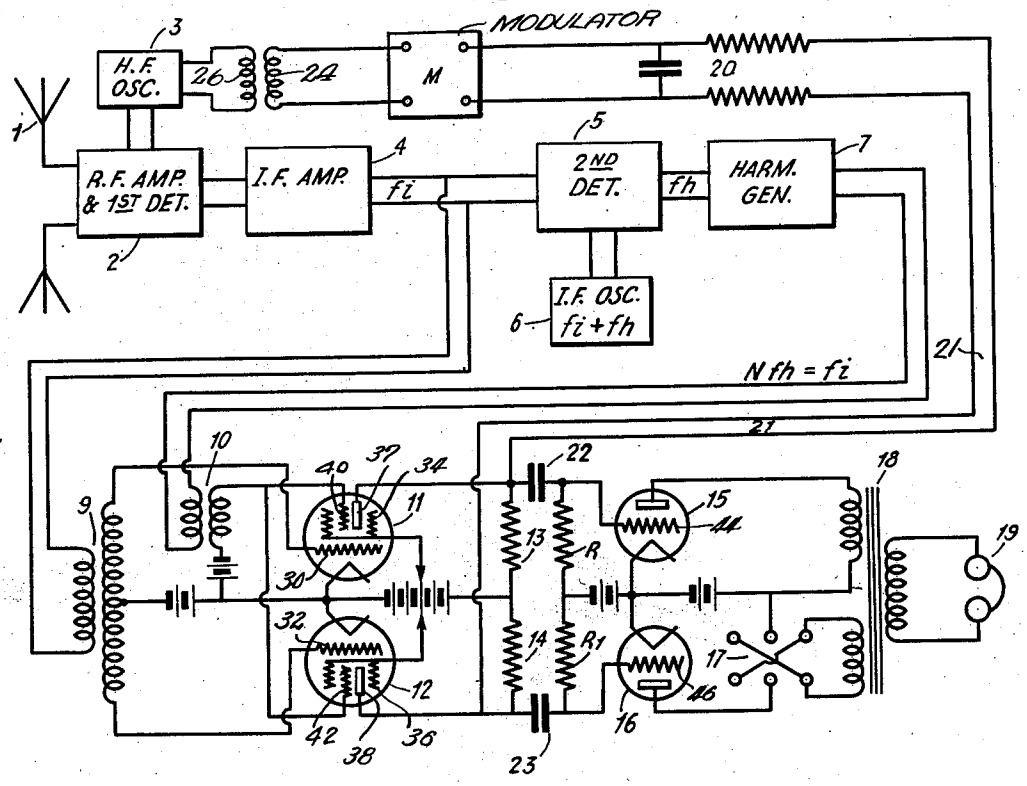

INVENTOR
MURRAY G. CROSBY
BY H. G. Grover
ATTORNEY

April 5, 1938. M. G. CROSBY 2,112,881

FREQUENCY MULTIPLICATION PHASE MODULATION RECEIVER

Filed Dec. 28, 1933 2 Sheets-Sheet 2

Fig. 2

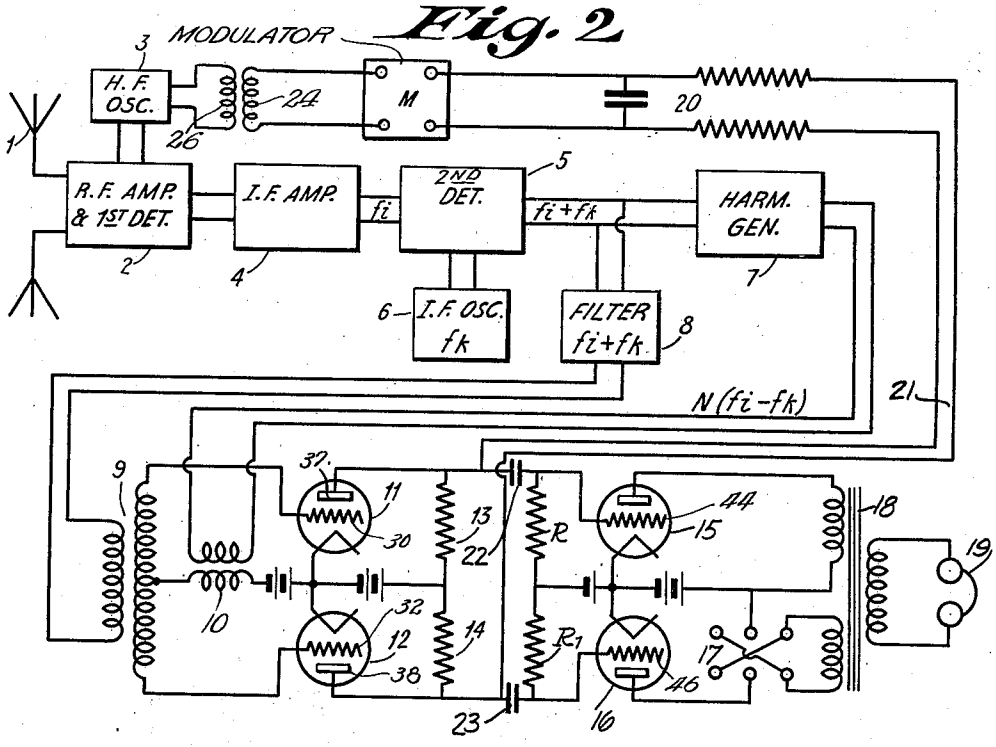

Fig. 3

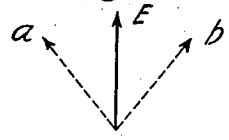

Fig. 4

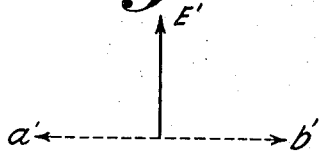

Fig. 5

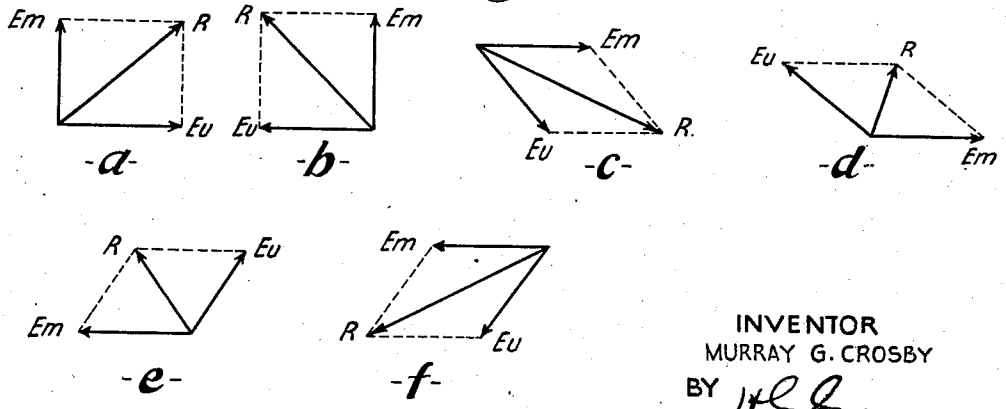

INVENTOR
MURRAY G. CROSBY
BY H. G. Crowell
ATTORNEY

Patented Apr. 5, 1938 2,112,881

UNITED STATES PATENT OFFICE

2,112,881

FREQUENCY MULTIPLICATION PHASE MODULATION RECEIVER

Murray G. Crosby, Riverhead, N. Y., assignor to Radio Corporation of America, a corporation of Delaware

Application December 28, 1933, Serial No. 704,257

24 Claims. (Cl. 250—20)

This invention relates to a new and improved type of phase modulation receiver. In this new receiver the phase modulated wave is frequency multiplied and then heterodyned back to its unmultiplied frequency. The energy so multiplied and heterodyned is then combined with original unmultiplied energy. When the phase modulated wave is frequency multiplied the degree or amount of phase modulation is increased simultaneously with the increase in frequency of the energy. When the wave of increased frequency and increased degree or amount of modulation is heterodyned to the lower frequency the degree or amount of modulation is unchanged. When the energies are combined the multiplied energy shifts in phase, with modulation, a greater amount than the unmultiplied energy so that the resultant of the combination varies in amplitude in accordance with the phase modulations on the wave. Consequently the phase modulations on the wave are converted to amplitude modulations for subsequent detection and/or observation.

In the prior art, phase modulation has been received by the following types of receivers:

1. *The carrier filter receiver.*—In this type of receiver the carrier sent out by the transmitting station is filtered out of the modulation energy and freed of its accompanying side-bands, by means of a crystal, mechanical, or tuned circuit type of filter. This carrier stripped of its side-bands and other undesired frequencies is combined with the phase modulated wave in a manner such that the resultant of the combination is amplitude modulated in accordance with the signal wave impressed on the carrier. The amplitude modulation so obtained is then detected and translated for utilization. See Crosby's United States application No. 616,803, filed June 13, 1932, now Patent #2,065,565 issued December 29, 1936.

2. *A synchronized oscillator receiver.*—This type of receiver is similar to the carrier filter receiver described above except that a local oscillator is used in place of the filter carrier to obtain energy of the carrier frequency for combination with the modulated energy. The local oscillator of this receiver may be maintained in synchronism with the signal by means of an automatic frequency control device. A receiver of this type has been described in Crosby's United States application No. 616,803, filed June 13, 1932, now Patent #2,065,565 issued December 29, 1936.

3. *The corrected frequency modulation receiver.*—Here any type of frequency modulated receiver is used to receive the phase modulated wave and the receiver output is followed by an audio frequency correction circuit which corrects the audio frequency distortion caused by the frequency discrimination of the frequency modulation receiver against the phase modulated wave. Such a receiver has been disclosed in Crosby's United States application No. 618,154 filed June 20, 1932 and Crosby's United States application No. 703,770 filed December 23, 1923 now Patent #2,060,611 issued November 10, 1936.

4. *The frequency division phase modulation receiver.*—This type of receiver is in a manner similar to the receiver of the present disclosure. In the frequency division receiver, however, the modulated energy is reduced in frequency by a multivibrator whereas in the present receiver the modulated wave is multiplied in frequency to increase the degree or amount of phase modulation. In the frequency division receiver the frequency divided energy is heterodyned back to the undivided frequency for combination with the undivided energy. The resultant of this combination is thereby amplitude modulated in accordance with the impressed signal wave and is subsequently detected. A frequency division phase modulation receiver has been described in Crosby's United States application No. 704,122, filed December 27, 1933, now Patent #2,064,106 issued December 15, 1936.

5. *The single side band phase modulation receiver.*—In this type of receiver single side-band filters are used to separate the carrier and each set of side-bands for separate detection. Thus, the carrier and the upper side-bands are detected in one detector and the carrier and lower side-bands in another detector and the detected outputs are combined in the proper phase relation. In this manner the cancellation of the output due to the carrier and upper side-bands by the output due to the carrier and lower side-bands is avoided. A receiver of this type has been disclosed in Crosby's United States application No. 565,005 filed September 25, 1931.

6. *Homodyne reception with the self-oscillating detector held in step with the modulated wave.*—In this type of receiver, an ordinary self-oscillating detector is tuned to synchronism with the signal and just enough signal is coupled to the oscillator to barely hold it "in step" with the signal. Thus a synchronized oscillator is effected with synchronism maintained by "sympathetic" oscillation of the local oscillator with respect to the signal. See Crosby's United States application No. 653,946 filed January 28, 1933 now Patent #2,050,963 issued August 11, 1936.

The receiver of the present invention is an improvement over the receiver of No. 2 above, that is the synchronized oscillation receiver. The present receiver might be said to have some features in common with the synchronized oscillation receiver but includes many improvements thereover and novel features not found therein. Since in the present invention a synchronism must be maintained between the signal and its heterodyned harmonic, the heterodyne oscillator is the local polarizing means and operates in a

manner similar to the manner in which the local oscillator is maintained in synchronism with the wave in the synchronized oscillator receiver. Hence, somewhat the same type of operation is obtained from the receiver of the present invention as is obtained from a synchronized oscillator receiver.

One of the main advantages which this receiver has over all other types of phase modulation receivers is that by means of the frequency multiplication employed here, a variable degree or amount of effectiveness of the modulation may be obtained. Thus, a low depth of modulation may be multiplied to a high depth. This feature is valuable in receivers used to trace parasitic phase or frequency modulation since a low parasitic modulation may be multiplied to a higher value for ease of examination or analysis. Also, in intelligence transmission by phase modulation the depth of modulation at the transmitter may be held low and then multiplied to the desired degree or amount at the receiver. This is of considerable importance in transmitters in which some amplitude modulation is accomplished inherently in the process by phase modulation. Since the amount of phase modulation may be maintained low at the transmitter by the use of the present receiver, the amount of undesired amplitude modulation inherently accomplished at the transmitter will be low and the power output of the transmitter may be high as compared to transmitters of the same potential power in which a high degree of phase modulation and consequently considerable undesired amplitude modulation is accomplished.

The novel features of my invention have been pointed out with particularity in the claims appended hereto as required by law. The method of operation of my invention, the manner in which the same is carried out and circuit arrangements by means of which demodulation of phase modulated waves and increase of depth of modulation in the same may be accomplished will be understood from the detailed description thereof which follows and therefrom and read in connection with the attached drawings in which: Figures 1 and 2 show two different forms of phase modulation receivers including degree of modulation regulating or controlling means; while, Figures 3 to 5 inclusive are vector diagrams illustrating the manner in which the degree or depth of modulation is reduced and demodulation is accomplished in the receivers of Figures 1 and 2.

Referring to the drawings in Figure 1 antenna 1 feeds modulated radio frequency energy to the radio frequency amplifier and first detector 2 and heterodynes the signal modulated wave to an intermediate frequency by beating the same with oscillations from the frequency controlled high frequency oscillator 3. The intermediate frequency selected from the output of 2 is fed to an intermediate frequency amplifier 4. The intermediate frequency oscillations from the output of amplifier 4 are fed to the primary winding of the transformer 9, the secondary of which is connected at its terminals to the control grids 30 and 32 of the differential detectors 11 and 12 and also to the second detector 5 which is also energized by oscillations from an intermediate frequency oscillator 6. The energy from the output of the second detector 5 is impressed on a harmonic generator 7 where the phase modulated energy of reduced frequency is frequency multiplied and fed to the primary winding of a transformer 10, the secondary winding of which is connected in parallel between an additional pair of electrodes 40 and 42 in the differential detectors 11 and 12. These detectors may be of the pentode type and may have their screen grid electrodes 34 and 36 energized as shown by a source which also supplies energy to the anodes 37 and 38 of said tubes. The output of transformer 10 is applied cophasally to grids 40 and 42 in the pentode detectors 11 and 12 while the output of transformer 9 is fed in phase opposition to grids 30 and 32 in the pentode detector tubes 11 and 12. The detected audio frequency or signal energy appears across the terminals of resistances 13 and 14. Energy from these resistors may be applied to the grids 44 and 46 of amplifiers 15 and 16 for indicating or observing purposes. Energy may also be applied from these resistances by way of a line 21 to a time constant circuit 20 including resistances and a condenser as shown and an electrode of the oscillator to vary the voltage thereof and consequently the frequency of the oscillations produced by oscillator 3. The energy from 20 need not be applied directly to an electrode in 3 but may be applied to a modulator tube in M and from the output of M to a tuning reactance in 3. For purposes of illustration the reactance connected with the line 21 and unit 20 is shown as an inductance 24 coupled to an inductance 26 in a circuit of the oscillator 3. It will be understood, however, that applicant contemplates the use of any electrical element here which may be varied as to its value by energy or potentials from the terminals of resistances 13 and 14 and in turn vary the value of a frequency determining element in a circuit of the oscillator 3. The controlling potentials may be fed directly from the line 21 and time constant device 20 to the oscillator 3 or may be fed by way of an intensity regulating device M. This device may include a thermionic amplifier or repeater. The circuit including the regulator M may be as disclosed in Crosby United States application No. 616,803.

Tubes 15 and 16 are amplifier tubes to whose grids 44 and 46 are fed the detected signal energy through coupling capacities 22 and 23. The transformer 18 in the plate circuit of the amplifier tubes 15 and 16 has connected with one of its primary windings a reversing switch 17 which in one position connects the primary windings in series so that the tubes are in effect in pushpull relation for the reception of phase modulation and in another position connects the primary windings in parallel or pushpush relation when amplitude modulated waves are to be received. The phones or other indicators 19 translate the electrical signal energy to acoustic energy. In Figure 2 the units 1, 2, 3, 4, 5, 6, and 7 are broadly the same as the corresponding units in Figure 1. However, in the circuit of Figure 2 the primary winding of the transformer 9 is coupled to the output of the second detector 5 by way of a band-pass filter 8 instead of from the output of the intermediate frequency amplifier 4 as in Figure 1. In Figure 2 the harmonic generator 7 feeds its multiplied energy to the primary winding of transformer 10 of the differential detectors 11 and 12. Here the detectors 11 and 12 are of the triode type and the energy from the filter 8 is fed in phase opposition to the control grids 30 and 32 of said detectors while the energy from the unit 7 is fed cophasally to the control grids 30 and 32 of said detectors. The effective voltage on the control grids there-

fore is the algebraic sum of the energies fed thereto cophasally and antiphasally. The differential detector arrangement of Figure 2 may replace the differential detector of Figure 1 or may be replaced by the differential detector of Figure 1. The differential controlling potentials appearing across the anodes 37 and 38 of the detectors 11 and 12 of the circuit of Figure 2 may be applied to the frequency controlling element in the high frequency oscillator 3 in the same manner that they were applied thereto in Figure 1.

This receiver depends for its operation upon the fact that frequency multiplication of a phase modulated wave, multiplies the phase shift or depth or amount of modulation at the same time that the frequency is multiplied. Thus, the voltage E represented by the vector E in Figure 3 might be phase modulated between the limits *a* and *b* before frequency multiplication and after frequency doubling would oscillate between the limits *a'* and *b'* as shown in Figure 4. Hence, the frequency multiplication multiplies the phase deviation or liberation by the order of frequency multiplication. If the frequency is doubled, the deviation is doubled. If the frequency is tripled the deviation is tripled.

In order to utilize the differential phase shift which exists between a frequency multiplied phase modulated wave and an unmultiplied phase modulated wave, the unmultiplied wave is combined with the multiplied wave which has been heterodyned back to the frequency of the unmultiplied wave. Thus, if the intermediate frequency were 100 kilocycles, the multiplication would produce a frequency of 200, 300, 400 etc. kilocycles depending upon the order of multiplication. The degree or amount of modulation or phase deviation will likewise be multiplied to the same degree as the wave. This multiplied energy is then heterodyned back to the original 100 kilocycles intermediate frequency by means of an additional demodulator cooperating with an intermediate frequency oscillator. Synchronism between the multiplied and unmultiplied energy is maintained by applying automatic frequency control to the high frequency oscillator. The frequency control means shown corrects the frequency of the oscillator so that a constant intermediate frequency is obtained irrespective of changes in the frequency of the received wave or of any oscillator in the receiver.

In the receiver of Figure 1 the intermediate frequency is heterodyned to a frequency lower than the intermediate frequency and multiplied back to a frequency equal to the original intermediate frequency. Thus, if the intermediate frequency were fi, detector 5 in conjunction with intermediate frequency oscillator 6 at a frequency of $fi+fh$, would heterodyne the signal to a frequency fh. The harmonic generator multiplies the frequency fh to a frequency N $fh=fi$. As a specific example, suppose the intermediate frequency=fi=300 kilocycles and the harmonic generator acted as a frequency doubler. Then the intermediate frequency oscillator could have a frequency of 300+150 or 450 kilocycles so that the output of the detector would be 450−300 or 150 kilocycles. The output of the detector is then doubled in frequency by the harmonic generator so that its frequency is back to the original unmultiplied frequency. It might at first be thought that since we have multiplied the energy to increase its phase shift, that since we heterodyne it back to its original frequency, the phase shift will be decreased again. However, the processes of multiplication and heterodyning are such that a multiplication produces a phase multiplication, but a heterodyning has no effect on the phase shift. Consequently, the multiplied effect remains upon the wave when it is heterodyned back to its original frequency. Hence, two waves are available for combination in the detectors, one whose phase shift is N times greater than the other where N is the order of multiplication.

In the receiver of Figure 2, the output of the intermediate frequency amplifier at a frequency fi is heterodyned by a frequency fk so that beats of frequencies $(fi+fk)$ and $(fi-fk)$ are produced. fk is chosen so that the lower of the two beat frequencies $(fi-fk)$ and $(fi+fk)$ may be multiplied to a frequency equal to the higher. In the case of a 300 kilocycle intermediate frequency, fk could be 100 kilocycles so that beats of 400 and 200 kilocycles would be produced in the output of the detector. The 200 kilocycle beat would then be multiplied by two in the harmonic generator so that the output of the harmonic generator would be synchronous with the 400 kilocycle beat output of the detector 5. The multiplied and unmultiplied 400 kilocycle energies would then be combined in the differential detectors to produce the automatic frequency control and the signal energy.

Figure 5 shows the phase relations of the multiplied and unmultiplied voltages as they are combined at the input circuits of the differential detectors. The multiplied voltage E_m is fed cophasally to the two detectors and the unmultiplied voltage E_u is fed in antiphase or 180 degrees apart on the two detectors. The normal unmodulated phase adjustment is with a phase difference of 90 degrees between the two voltages diagrams (*a*) and (*b*) show. The resultants of the combined voltages are then equal in amplitude and produce equal plate currents in the plates of the detectors.

When modulation is applied, the phase of the unmultiplied voltage swings in the clockwise direction by the amount given by the difference in phase between E_u in (*a*) and E_u in (*c*) on one detector, and in (*b*) and (*d*) on the other detector. In this instance frequency doubling was assumed so that E_m, the multiplied frequency, moves twice the phase deviation of the unmultiplied energy. Hence, the phase shift has brought the two vectors closer together in phase for detector A and farther apart for detector B as shown in Figure 5 (*c*) and (*d*). The resultants R have also changed, one having increased in amplitude and the other decreased.

In a similar manner, when the phase shifts, with modulation, in the counter-clockwise direction as shown in diagrams (*e*) and (*f*) the amplitudes of the resultants change differentially. Thus, the resultants applied to the two detectors are differentially amplitude modulated in accordance with the applied signal wave of the phase modulation. These differential modulations are detected by the two detectors and amplified for combination in the output transformer 18. Since the modulations applied to the detectors are differential, the detector outputs are 180 degrees out of phase so that the series or push-pull connection of transformer 18 is used for phase modulation reception.

In the case of Figure 1, a pentode type of detector is shown with the voltages applied to separate grids instead of being combined and applied

to the same grid. This pentode detector has advantages over the triode type of detector as shown in Figure 2, since it does not employ square-law detection, but operates as a linear modulator which modulates one of the voltages upon the other so that square-law distortion is avoided. Otherwise, the pentode detector functions to produce the same effect as the triode.

The automatic frequency control functions in a manner similar to the one described in Crosby United States application No. 616,803 now Patent #2,065,565 issued December 29, 1936. As either the signal, the high frequency oscillator, or the intermediate frequency oscillator, drift so that synchronism between the multiplied and unmultiplied energy is departed from, the detector plate currents vary differentially. This is true, since for synchronism the resultant voltages fed to the detectors are equal as shown in Figure 5 (*a*) and (*b*). As soon as synchronism is departed from, the voltages fed to the detectors are unequal as shown by Figure 5 (*c*) (*d*) or (*e*) and (*f*). Consequently, a differential voltage appears across resistors 13 and 14 in the plates of the detectors and a correcting voltage is sent over line 21 to the high frequency oscillator. This high frequency oscillator is frequency modulated in the same manner as the high frequency oscillator of Figure 6 in Crosby United States application No. 616,803 now Patent #2,065,565 issued December 29, 1936. Consequently, this differential voltage acts to change the frequency of the high frequency oscillator by an amount sufficient to restore synchronism. The time constant circuit 20 is adjusted to prevent audio frequency from modulating the high frequency oscillator.

In place of applying the automatic frequency control to the high frequency oscillator as both circuits of Figures 1 and 2 show, the control could be applied to the intermediate frequency oscillator 6 of both circuits. Thus, the intermediate frequency oscillator would be one whose frequency was partially dependent upon its tuning and partially dependent upon the voltage from lines 21.

A superheterodyne arrangement is not a necessity. With the frequency control on oscillator 6 and detector 5 being fed by the signal, units 2, 3 and 4 could be dispensed with and the oscillators 6 of Figures 1 and 2 could be adjusted for signal frequency input instead of intermediate frequency.

The receiver may be used to receive frequency modulation by the addition of an output correction circuit which makes the output proportional to frequency. Such a correction circuit would have an output characteristic given by Figure 3 of Crosby United States application No. 608,383 filed April 30, 1932, and would utilize the correction circuits of Figures 5, 6, 7, 7*a*, and 8 of Crosby United States application No. 608,383, Patent No. 2,085,739, dated July 6, 1937.

Although both the circuits of Figures 1 and 2 show the use of the same set of detectors for automatic frequency control and audio detection, the circuits are not limited in this respect. Separate detectors could be used in the same manner as in Figure 1 of Crosby United States application No. 616,803 now Patent #2,065,565 issued December 29, 1936. In such a case the detector used for audio detection might be simplified by using a single pentode detector with the two energies fed to separate grids.

Having thus described my invention and the operation thereof, what I claim is:

1. The method of demodulating a carrier wave modulated in phase or frequency at signal frequency which includes the steps of, beating said wave energy with oscillatory energy to produce characteristic intermediate frequency energy, beating a portion of said intermediate frequency energy with other oscillatory energy to produce characteristic energy of lower frequency, multiplying the frequency of said characteristic energy of lower frequency, up to the frequency of said intermediate frequency energy thereby multiplying the degree of modulation of said energy of lower frequency, and combining said energy of multiplied frequency with energy of said intermediate frequency to obtain the signal.

2. The method of demodulating carrier wave energy modulated in phase or frequency at signal frequency which includes the steps of beating said wave energy with oscillatory energy to produce characteristic energy of intermediate frequency, beating a portion of said characteristic energy of intermediate frequency with other oscillatory energy to produce characteristic energy of lower frequency, multiplying the frequency of the characteristic energy of said lower frequency to the frequency of said intermediate frequency energy thereby increasing the degree of modulation of said energy of lower frequency, combining said multiplied energy with energy of said intermediate frequency to render the signal, and maintaining said first intermediate frequency substantially constant during said operation.

3. The method of demodulating wave energy modulated in phase or frequency at signal frequency which includes the steps of, multiplying the frequency of the modulated wave energy to increase the depth or degree of modulation thereon, demodulating the resultant energy, and maintaining the frequency of the modulated wave energy substantially constant during said process.

4. The method of demodulating a wave which is modulated in phase or frequency at signal frequency which includes the steps of, producing modulated waves of higher and lower related frequencies, each of which waves are characteristic of said wave to be demodulated, multiplying the frequency of the lower of the produced modulated waves to a frequency equal to the frequency of the higher of the produced modulated waves, and combining the energy of multiplied frequency with energy of the produced wave of higher frequency in phase displaced relation to produce the signal.

5. The combination of a demodulator comprising a phase modulated wave receiver of the heterodyne type including a first detector, an oscillator, and an intermediate frequency amplifier, a second detector, and a second oscillator coupled to said intermediate frequency amplifier, a harmonic generator coupled with the output of said second detector, a third detector system having input electrodes coupled in phase to said harmonic generator and in phase opposition to said second detector, said third detector system having output electrodes, and a coupling between the output electrodes of said third detector system and an oscillator in said receiver.

6. The combination of a demodulator comprising a phase modulated wave receiver of the heterodyned type including a local oscillator, a detector and an intermediate frequency amplifier, a second detector and a second oscillator coupled to said intermediate frequency amplifier, a harmonic generator coupled with the output of said second

detector, a third detector having its input electrodes coupled to said harmonic generator and to said intermediate frequency amplifier and its output coupled to an indicator, and a coupling between the output of said third detector and the local oscillator in said receiver.

7. A device for demodulating signals comprising a carrier wave one or more characteristics of which other than the amplitude are altered at signal frequency including, signal receiving means of the heterodyned type including an oscillator, a radio frequency amplifier, a first detector and an intermediate frequency amplifier, said oscillator having a frequency determining element the electrical character of which may be varied, a pair of thermionic tubes each having a plurality of corresponding electrodes including an output electrode, a circuit for applying oscillations from the output of said intermediate frequency amplifier in phase opposition to like electrodes in said tubes, frequency reducing means of the heterodyned type coupled with said intermediate frequency amplifier, frequency multiplying means coupled with said reducing means, a circuit for applying oscillations from the output of said frequency multiplying device cophasally to other like electrodes in said thermionic tubes, signal indicating means coupled with the output electrodes of said thermionic tubes, and a circuit including time constant devices connecting the output electrodes of said tubes to the frequency determining element in the oscillator of said receiver.

8. A device for demodulating signals comprising a carrier wave the length of which is altered at signal frequency including, signal receiving means of the heterodyned type including a radio frequency amplifier, a local oscillator, a first detector, an intermediate frequency amplifier and a second oscillator and second detector, said local oscillator having a frequency determining reactance element which may be varied, a pair of thermionic tubes each having a plurality of corresponding control electrodes and an anode electrode, a circuit for applying oscillations from the output of said second detector in phase opposition to like control electrodes in said tubes, frequency multiplying means coupled with said second detector, a circuit for applying oscillations from said frequency multiplying means cophasally to like control electrodes in said thermionic tubes, signal indicating means coupled with the anode electrodes of said thermionic tubes, and a circuit including time constant devices coupling the anode electrodes of said tubes to the frequency determining reactance element in the local oscillator of said receiver.

9. A device for demodulating signals comprising a carrier wave modulated in phase at signal frequency including, signal receiving means of the heterodyned type including a local oscillator, a radio frequency amplifier, a first detector, an intermediate frequency amplifier and a second oscillator and second detector, said local oscillator having a frequency controlling element which may be varied, a pair of thermionic tubes each having a control electrode and an output electrode, a circuit for applying oscillations from the output of said second detector in phase opposition to the control electrodes in said tubes, a filter in said circuit, frequency multiplying means coupled with said second detector, a circuit for applying oscillations from said frequency multiplying means cophasally to the control electrodes in said tubes, signal indicating means coupled with the output electrodes of said tubes, and a circuit including time constant devices coupling the output electrodes of said tubes to the frequency determining element in the local oscillator of said receiver.

10. The combination of a phase modulated wave receiver of the heterodyne type including a demodulator having an input and an output and an oscillator coupled with said demodulator, a harmonic generator having an input coupled to the output of said demodulator, frequency reducing means in said coupling, said harmonic generator also having an output, a detector having input and output electrodes, circuits coupling the input electrodes of said detector to the output of said harmonic generator and to the output of said demodulator, and a coupling between the output electrodes of said detector and said oscillator.

11. The combination of a phase modulated wave receiver of the heterodyne type including a detector having an input and an output, a harmonic generator having an input and an output, means coupling the output of said detector to the input of said harmonic generator, a frequency reducing device in said means, a second detector including a pair of thermionic tubes each having input electrodes, and circuits coupling the input electrodes of said tubes in phase to the output of said harmonic generator and in phase opposition to the output of said first detector.

12. The method of signalling by means of oscillations modulated in phase or frequency which includes the steps of, beating the modulated oscillations with other oscillations to produce characteristic oscillations of lower frequency, multiplying the frequency of the oscillations of said lower frequency to increase the degree of modulation thereof and combining the oscillations of multiplied frequency substantially in phase quadrature with oscillations of like frequency which are characteristic of the oscillations modulated in phase or frequency to render the signal.

13. The method of demodulating wave energy which is modulated in phase or frequency which includes the step of, multiplying the frequency of energy characteristic of said modulated wave energy to obtain energy in which the depth or degree of modulation is increased, changing the frequency of the original phase or frequency modulated energy without changing the degree of modulation to obtain energy of a frequency equal to the multiplied frequency and combining the energy obtained by multiplying the frequency of the energy characteristic of the modulated wave energy substantially in phase quadrature with original energy of changed frequency to render the signal.

14. The method of increasing the degree of phase or frequency modulation on a phase or frequency modulated carrier wave and demodulating said wave which includes the steps of, beating said modulated carrier wave with other oscillations to obtain energy of an intermediate frequency, multiplying the frequency of said energy of intermediate frequency to increase the degree of modulation thereof, combining said energy of multiplied frequency substantially in phase quadrature with energy of like frequency characteristic of the phase or frequency modulated carrier wave to render the signal, and maintaining said intermediate frequency energy substantially constant in frequency during said process.

15. In a signalling system, a phase or frequency modulated wave responsive circuit, an

amplifier having an input coupled to said circuit, said amplifier having an output, a detector having an input coupled to said amplifier output, said detector having an output, a source of local oscillations coupled to said detector, a harmonic generator having an input coupled to the output of said detector, said harmonic generator having an output, and a second demodulator having an input coupled to the output of said harmonic generator and to the output of said amplifier and having an output coupled to a utilization circuit.

16. The combination of a demodulator comprising a phase or frequency modulated wave receiver of the heterodyne type including a first detector, an intermediate frequency amplifier, and an oscillator, said first detector having an input excited by modulated wave energy and an output coupled to said intermediate frequency amplifier, said first detector being also coupled to said oscillator and said intermediate frequency amplifier having an output, a second oscillator, a second detector having an input coupled to the output of said intermediate frequency amplifier said second detector being coupled to said second oscillator, said second detector having an output, a harmonic generator having an input coupled to the output of said second detector, said harmonic generator having an output, and an additional detector having an input coupled to the output of said harmonic generator and to the output of said second detector.

17. The method of demodulating a wave modulated in phase or frequency at signal frequency which includes the steps of, multiplying the frequency of said wave to increase the degree of modulation thereon, producing wave energy characteristic of the original modulated wave energy and of a frequency equal to the frequency of the wave energy of multiplied frequency and combining said energy, the frequency of which is multiplied, and said produced energy of equal frequency in phase displaced relation to render the signal frequency.

18. The method of increasing the degree of phase or frequency modulation on a phase or frequency modulated carrier wave and demodulating said wave which includes the step of, beating said carrier wave with other oscillations to obtain energy of an intermediate frequency, multiplying the frequency of said energy of intermediate frequency to increase the degree of modulation and combining said energy of multiplied frequency with energy of like frequency characteristic of the phase or frequency modulated carrier wave to render the signal.

19. In a circuit arrangement for demodulating phase modulated wave energy, a detector device having input electrodes, means for amplifying said wave energy, a plurality of paths connecting said means to said input electrodes, means in one of said paths for reducing the frequency of the wave energy passed thereby without changing the degree of modulation thereon and means in said one path for multiplying the frequency of the wave energy passed thereby and the degree of modulation of the wave energy whereby energies of like frequency are applied to said input electrodes over both paths.

20. In a signalling system a pair of electron discharge tubes each having a control electrode, a cathode and an anode, an output circuit connected with the anodes and cathodes of said tubes, a reactance connected between the control electrodes of said tubes, said reactance being connected to the cathodes of said tubes, a second reactance connecting the space between the control grid and cathode of each tube in parallel, means for intercepting phase modulated wave energy, a wave energy path connecting said means to one of said reactances, a wave energy path connecting said means to the other of said reactances, means in one of said paths for multiplying the frequency of the wave energy passed thereby and simultaneously multiplying the degree of phase modulation of said energy, and means in said one of said paths for reducing the frequency of the wave energy passed thereby, whereby the wave energies impressed on said reactances are of like frequency.

21. In a signalling system, a pair of electron discharge devices each having a cathode, an anode and a plurality of control electrodes, a reactance connected between corresponding control electrodes in each of said devices, said reactance being also connected to the cathodes of said devices, a second reactance connecting the space between other corresponding control electrodes and the cathodes in each device in parallel, means for intercepting phase modulated wave energy, a first path connecting said means to one of said reactances, a second path connecting said means to the other of said reactances, means in one of said paths for multiplying the frequency and degree of modulation of the wave energy passed thereby, means in said one of said paths for reducing the frequency of the wave energy passed thereby whereby energy of like frequency is impressed on said reactances from said paths, and an output circuit connected to the anodes of said devices.

22. A signalling system as recited in claim 20 in which said means for intercepting phase modulated wave energy has a tuning reactance, and in which a control circuit is connected to the anodes of said devices and coupled to said tuning reactance.

23. A signalling system as recited in claim 21 in which said means for intercepting prase modulated wave energy has a tuning element, and in which the anodes of said devices are connected to said tuning element.

24. The method of receiving and demodulating phase or frequency modulated wave energy which includes the steps of, deriving from said phase or frequency modulated wave energy characteristic wave energy which includes substantially all of the frequencies of the modulated wave energy, multiplying the frequency of said derived characteristic wave energy to increase the degree or depth of modulation thereon, deriving from said phase or frequency modulated wave energy other characteristic wave energy which includes substantially all of the frequencies of the modulated wave energy, said other characteristic wave energy being of a mean frequency equal to the mean frequency of said multiplied wave energy, and combining said other wave energy with said wave energy of multiplied frequency to reproduce the modulations on said phase or frequency modulated wave energy.

MURRAY G. CROSBY.