A. C. E. ROBERTS.

MACHINE FOR LOADING EARTH AND LIKE MATERIALS.

APPLICATION FILED DEC. 29, 1914.

1,169,569.

Patented Jan. 25, 1916.

2 SHEETS—SHEET 1.

Fig 1

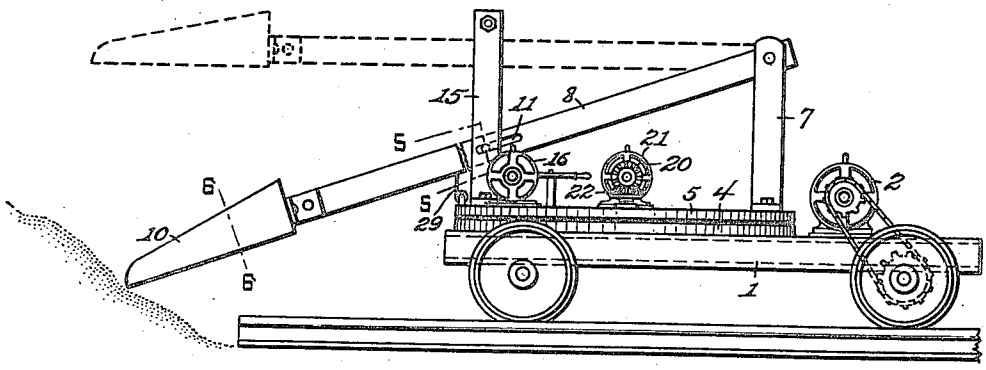

Fig. 2

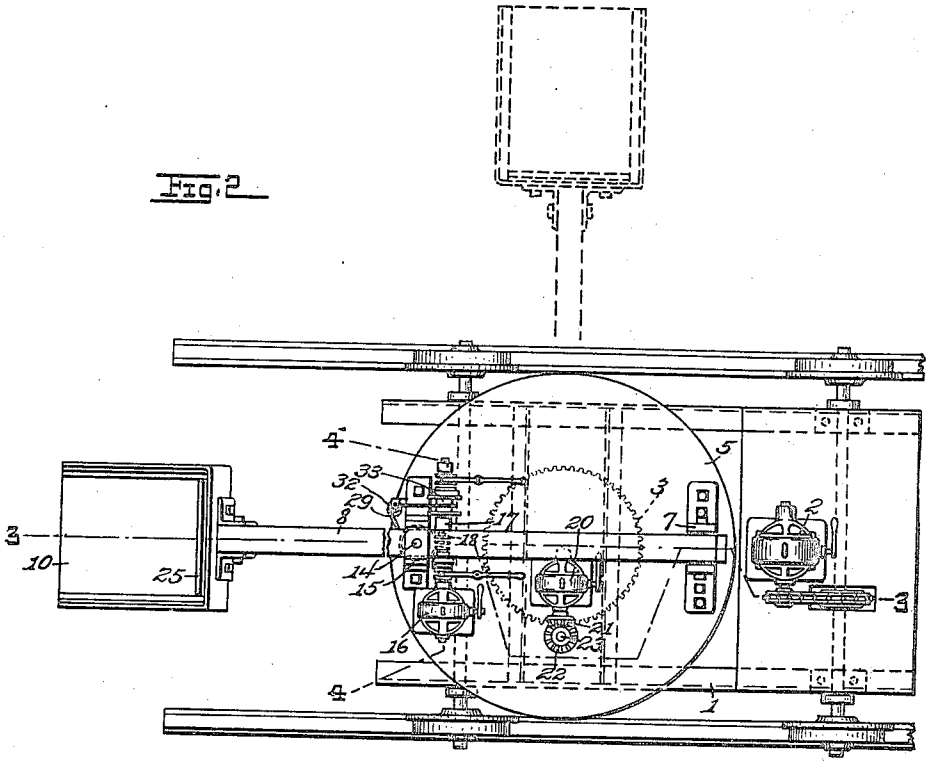

WITNESSES:

F. E. Arthur

W. F. Keefer.

INVENTOR.

A. C. E. Roberts.

BY H. E. Dunlap

ATTORNEY.

A. C. E. ROBERTS.

MACHINE FOR LOADING EARTH AND LIKE MATERIALS.

APPLICATION FILED DEC. 29, 1914.

1,169,569.

Patented Jan. 25, 1916.

2 SHEETS—SHEET 2.

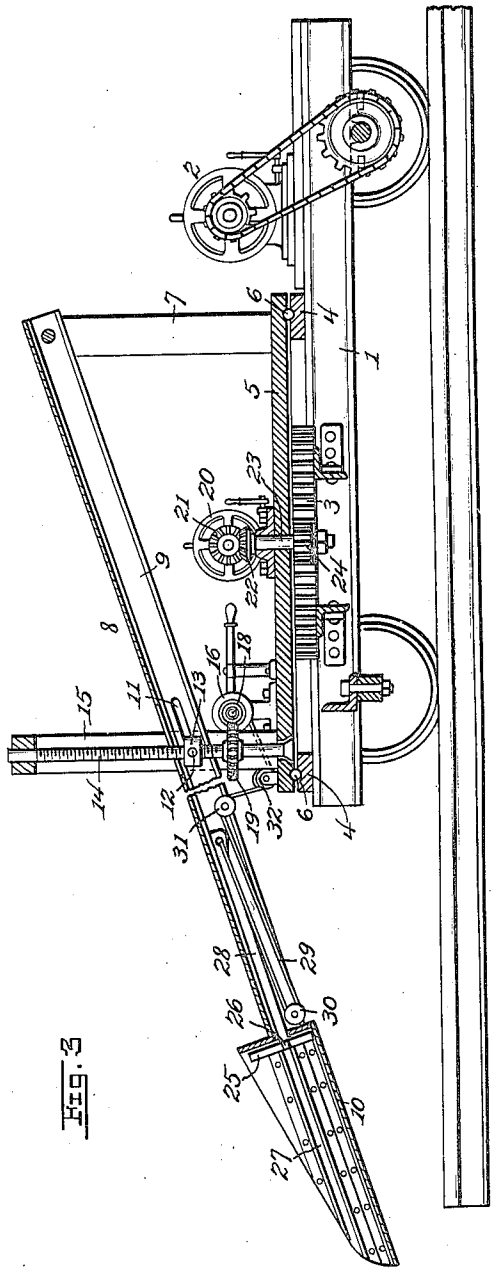

Fig. 3.

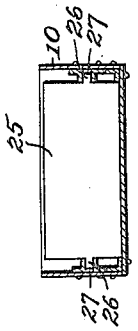

Fig. 6.

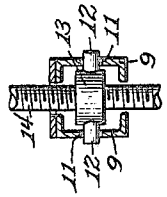

Fig. 5.

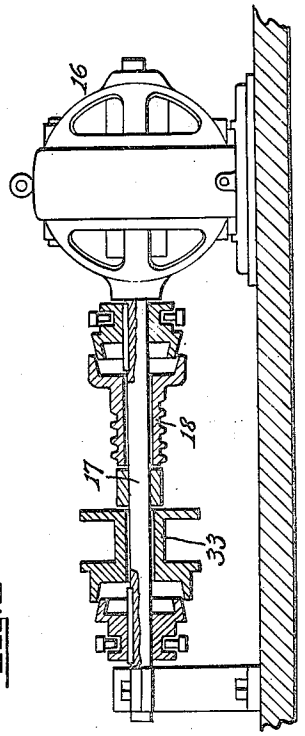

Fig. 4.

WITNESSES:

J. E. Arthur

W. F. Keefer.

INVENTOR.

A. C. E. Roberts.

BY H. E. Dunlap.

ATTORNEY.

UNITED STATES PATENT OFFICE.

AARON C. E. ROBERTS, OF RAYLAND, OHIO.

MACHINE FOR LOADING EARTH AND LIKE MATERIALS.

1,169,569. Specification of Letters Patent. Patented Jan. 25, 1916.

Application filed December 29, 1914. Serial No. 879,464.

To all whom it may concern:

Be it known that I, AARON C. E. ROBERTS, a citizen of the United States of America, and resident of Rayland, county of Jefferson and State of Ohio, have invented certain new and useful Improvements in Machines for Loading Earth and like Materials, of which the following is a specification.

This invention relates broadly to power shovels, and more specifically to a machine for loading coal, loose earth, and the like on cars or trucks.

The primary object of the invention is to provide a machine adapted for use in mines whereby the material mined may be mechanically loaded upon cars or trucks to be transported to the mouth of the mine.

A further object is to provide a machine of the character mentioned which is carried by a power driven truck and is consequently adapted to be conveniently moved to any desired location or shifted as occasion requires in loading.

With these and other objects in view, the invention resides in the features of construction, arrangement of parts and combinations of elements which will hereinafter be fully described, reference being had to the accompanying drawings, forming a part of this specification, in which—

Figure 1 is a side elevation of the invention; Fig. 2 is a top plan view of the same; Fig. 3 is an enlarged section on the line 3—3, Fig. 2; Fig. 4 is an enlarged section on the line 4—4, Fig. 2; and Figs. 5 and 6 are enlarged sections taken respectively on the lines 5—5 and 6—6, Fig. 1.

Referring to said drawings, in which like designating characters distinguish like parts throughout the several views 1 indicates generally the frame of a truck which may either be arranged for traveling on a track or on the ground. Said truck is self-propelled, a suitable motor 2 being shown mounted on the truck and geared to an axle. Mounted in a stationary position on the frame is a horizontally disposed gear wheel 3. Also disposed on said frame in encircling relation to said gear wheel is a circular base member 4 upon which a horizontally disposed table 5 is rotatably mounted, the adjacent faces of said base member and said table being preferably provided with ball-races in which ball-bearings 6 are disposed for facilitating rotation of the table. An upright standard 7 is mounted upon the table at a suitable point, and pivotally connected to the upper end of said standard is the rear end of a long arm which is herein generally designated by the numeral 8, said arm being preferably formed of a pair of oppositely facing channel members 9. Said arm 8 extends diametrically across, or over, the table 5 and carries upon its front end a shovel or scoop 10 which is adapted, when said arm is lowered, to be caused to enter a bed of loose earth, coal, or other material to be handled disposed in front of the truck at or about the ground level on which the latter operates. Provided in the opposite channel members 9 at suitable points between the opposite ends of the arm 8 are oppositely-disposed longitudinally-extending slots 11 in which are mounted laterally extending arms or trunnions 12 carried by a nut 13 in which a vertically disposed jack-screw 14 is operable for adjusting the elevation of the front end of said arm 8 and, consequently, of the scoop 10. Said jack-screw has its opposite ends suitably journaled, as in bearings provided in the table and in a suitably located upright supporting frame 15 carried by said table. A motor, as 16, mounted on the table is employed for rotating said jack-screw, the drive-shaft 17 of said motor having a clutch-controlled worm gear 18 thereon in mesh with a spur gear 19 fixed on said jack-screw. A second motor 20 mounted upon the table is preferably employed for rotating the table for carrying the scoop back and forth between the loading and unloading positions of the latter, the scoop unloading position being preferably lateral with respect to the truck, as shown in dotted lines in Fig. 2. Said motor 20 has a bevel gear 21 fixed on its drive shaft and disposed in mesh with a bevel gear 22 carried by a suitably located vertical shaft 23 which is journaled on the table. Said shaft 23 carries thereon a pinion 24 in mesh with the gear wheel 3. As is obvious, rotation of said shaft 23, which is carried in fixed relation to the table, accomplishes, through the intermediate mechanism above described, the rotation of the table.

To accomplish the unloading of the scoop, I provide the latter with a shiftable pusher 25 consisting of a vertical plate having lateral arms 26 which operate in suitable guide grooves 27 provided in the inner faces of

the sides of the scoop. Rigidly attached to the rear face of said plate or pusher 25 is a handle-like arm 28 which telescopes within the scoop supporting arm 8. Connected to the rear end of said arm 28 is one end of a cable 29 which extends thence to and about a series of appropriately located pulleys, as the pulleys 30 and 31 carried by said arm 8, and a pulley 32 carried by the table 5, and is wound upon a clutch controlled drum 33 carried by the drive shaft 17 of motor 16. As is obvious, forward rotation of the drum 33 actuates the pusher 25, through the intermediate mechanism, to move forward in the scoop and thus to dislodge any material contained by the latter. While mechanical means might be provided for returning said pusher to its normal, or retracted, position, such is unnecessary for the reason that said pusher is forced back by the material being loaded when, in loading, the scoop is advanced into the bed or pile of material. In practice, the scoop having been adjusted to a lowered position, the truck is advanced toward the material to be loaded until the scoop has entered said material to the desired depth, or until the desired amount of material has been collected in the scoop, whereupon the scoop is elevated to substantially the horizontal position indicated in dotted lines in Fig. 1; and, during or subsequent to the elevating movement of the scoop, the table is rotated for carrying said scoop to its load-discharging point, as to a car located laterally with respect to the truck. At the same time the position of the truck itself may be shifted, if desired, to adjust its position with respect to that of the car being loaded. When the discharging point has been reached, the pusher 25 is advanced to dislodge the material contained by the scoop.

It will be apparent that the device herein described is readily susceptible to numerous changes in the form and arrangement of some of its parts. I would therefore have it understood that I do not desire to limit myself to the precise construction and arrangement of parts herein shown and described.

What is claimed is—

1. In a loading device, a pivotally mounted hollow arm, a scoop carried thereby having guide grooves in its inner side faces, a pusher within the scoop having lateral arms slidably engaged in the guide grooves thereof, a handle extending rearwardly from the pusher in telescopic relation to the arm, spaced pulleys on the arm, a cable taking over the pulleys and fastened at one end to the handle for sliding the pusher on relative movement between the arm and cable, a winding drum connected with the opposite end of the cable, and means for moving the arm about its pivot to effect actuation of the pusher.

2. In a loading device, a pivotally mounted hollow arm, a scoop carried thereby having guide grooves in its inner side faces, a pusher within the scoop having lateral arms slidably engaged in the guide grooves thereof, a handle extending rearwardly from the pusher in telescopic relation to the arm, spaced pulleys on the arm, a cable taking over the pulleys and fastened at one end to the handle for sliding the pusher on relative movement between the arm and cable, a winding drum connected with the opposite end of the cable, means for operating the arm about its pivot, and means for actuating the pusher while the arm is at rest and by and during movement of the latter.

3. In a loading device, a scoop, a pusher slidable in the scoop, a handle extending rearwardly from the pusher for sliding the latter, a pivoted hollow arm carrying the scoop and provided with a longitudinal opening, said handle being slidable in the arm, means for sliding the handle to actuate the pusher operable through the longitudinal opening of the arm, means for swinging the arm about its pivot, and means for operating the first means when the arm is at rest and also by and during movement of the arm.

4. In a loading device, a scoop, a hollow arm supporting the scoop and consisting of oppositely facing channel members secured together, a pulley supported between and by the lower flanges of the channel members, a pusher slidable within the scoop, a handle extending rearwardly from the pusher and within the hollow arm, and a flexible member secured to the handle and taking over the pulley for actuating the pusher.

In testimony whereof, I affix my signature.

AARON C. E. ROBERTS.