Aug. 28, 1923. 1,465.961

E. F. W. ALEXANDERSON

WIRELESS SIGNALING SYSTEM

Filed April 19, 1916 2 Sheets-Sheet 1

Fig. 3.

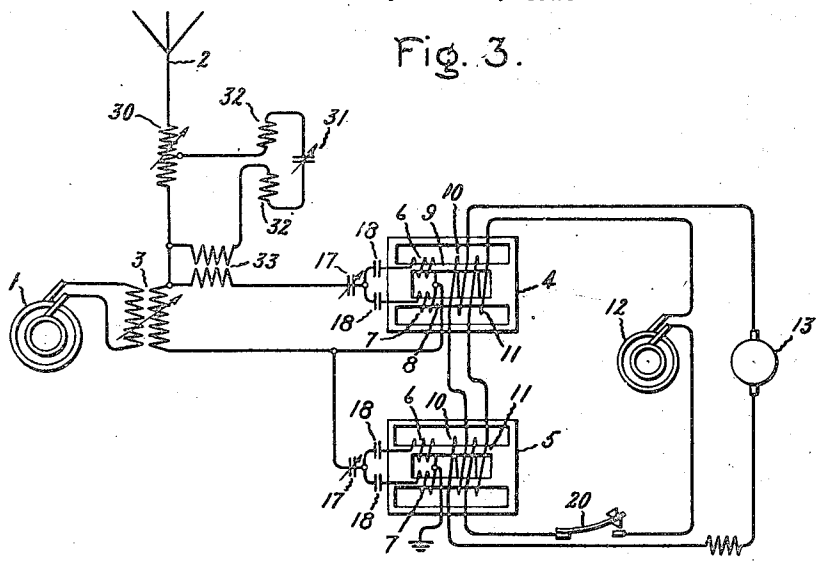

Fig. 1.

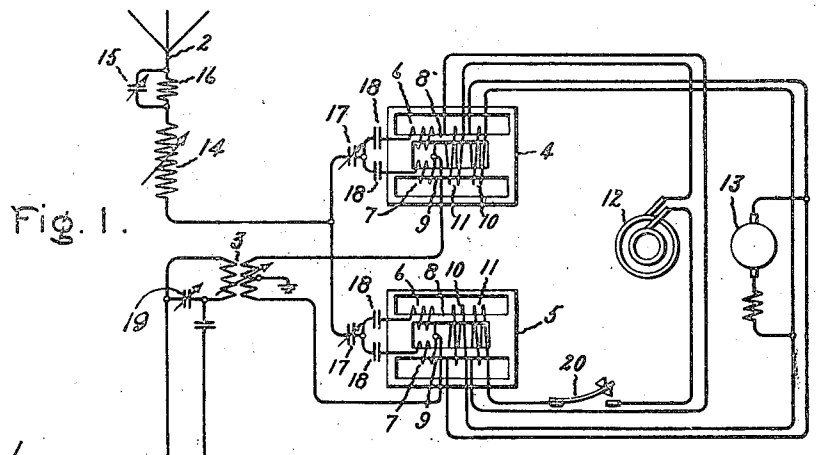

Fig. 2.

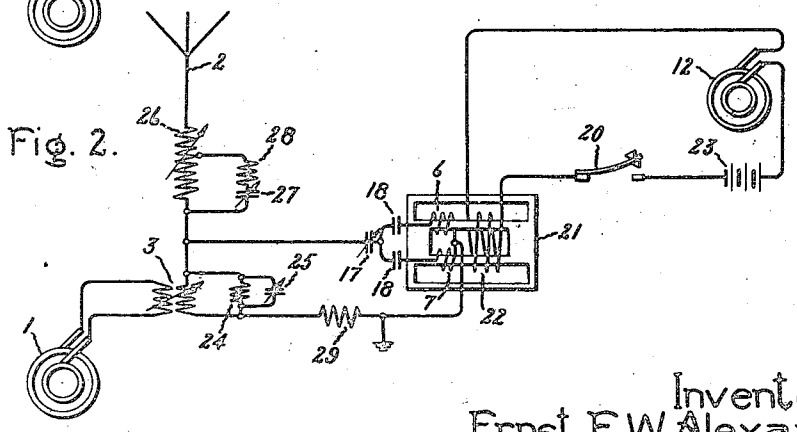

Inventor:
Ernst F. W. Alexanderson,
by Albert G. Davis
His Attorney.

Aug. 28, 1923. 1,465.961

E. F. W. ALEXANDERSON

WIRELESS SIGNALING SYSTEM

Filed April 19, 1916 2 Sheets-Sheet 2

Fig. 4.

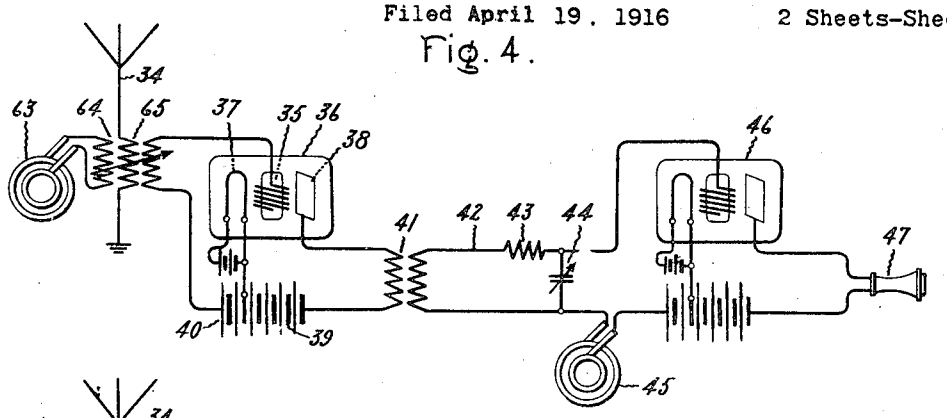

Fig. 5.

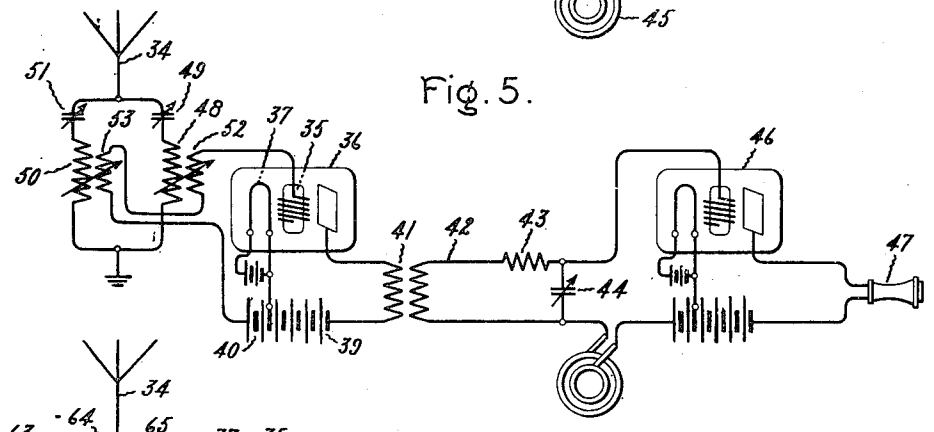

Fig. 6.

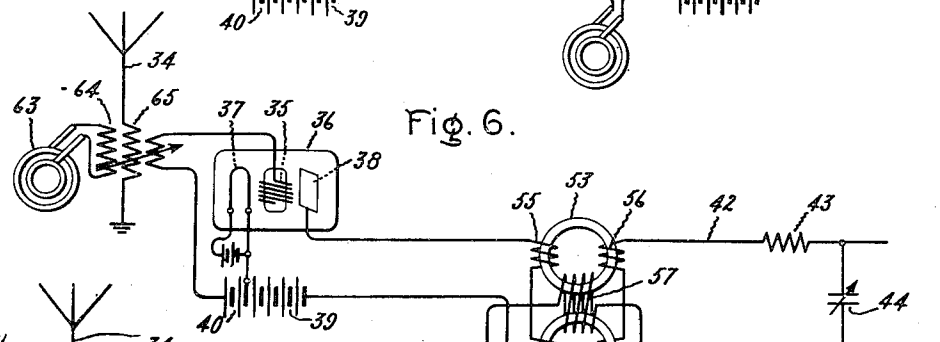

Fig. 7.

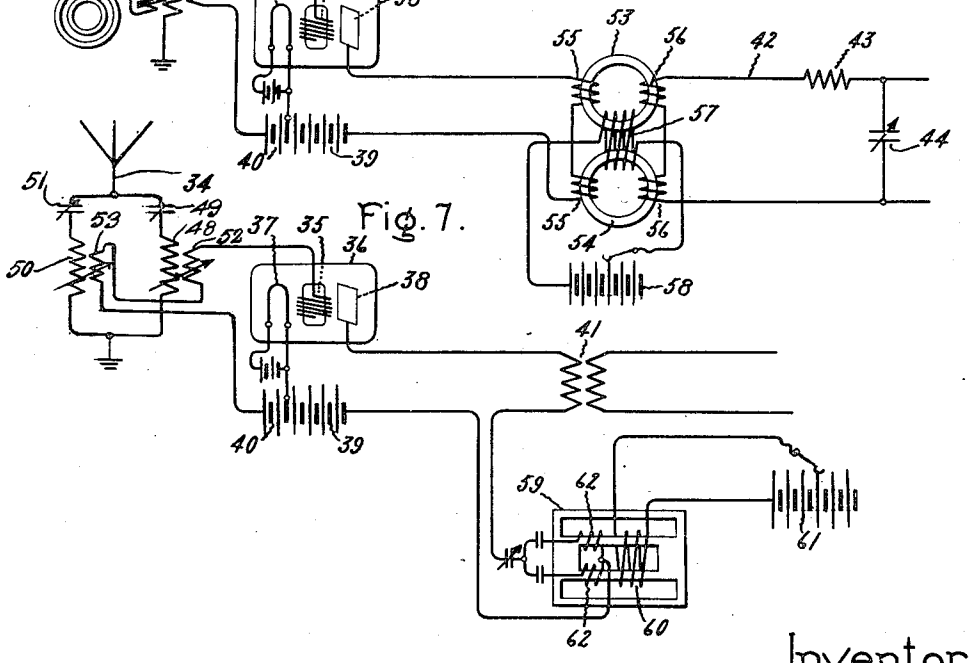

Inventor:
Ernst F. W. Alexanderson,
by Albert G. Davis
His Attorney

Patented Aug. 28, 1923. 1,465,961

UNITED STATES PATENT OFFICE.

ERNST F. W. ALEXANDERSON, OF SCHENECTADY, NEW YORK, ASSIGNOR TO GENERAL ELECTRIC COMPANY, A CORPORATION OF NEW YORK.

WIRELESS SIGNALING SYSTEM.

Application filed April 19, 1916. Serial No. 92,156.

To all whom it may concern:

Be it known that I, ERNST F. W. ALEXANDERSON, a citizen of the United States, residing at Schenectady, county of Schenectady, State of New York, have invented certain new and useful Improvements in Wireless Signaling Systems, of which the following is a specification.

My present invention relates to wireless signaling systems, and more particularly to a system in which means is provided for overcoming the effect of static disturbances in the receiving instruments.

Electrostatic disturbances occur continuously in the atmosphere, sending out electromagnetic waves of varying frequency, which will in the description which follows be referred to as strays. These waves are absorbed by the receiving antenna and among the variety of waves absorbed there are always some which are in resonance, that is, which have the same length as a signal which is to be received and consequently act upon the receiving devices in the same way as the signal. Having analyzed this condition both mathematically and experimentally, I have come to the conclusion that a fundamental rule must be the basis of any device used for decreasing the effect of static disturbances. Any discrimination between a wave of the same frequency originating from static and from the signal must be based on some difference in character between these two waves. If the strays were like the signals both in frequency and amplitude variation, and in addition to that stronger than the signals, there would be no way conceivable for discriminating between one and the other. The longer the period is during which the strays and the signaling waves can be compared, the greater is the chance for finding a distinguishing difference in the sequence of amplitude variations if in nothing else. In order that the device be effective for discrimination against strays, it should therefore be designed so that the wave trains can be distinguished by comparing their character for sufficiently long periods. The receiving devices which are at present used commercially are constructed so as to take advantage of this law to a certain extent by using a highly resonant receiving circuit on which the signal can be allowed to act for a considerable number of successive alternations. The reason why these devices do not entirely discriminate against strays is the fact that the receiving antenna is set in oscillation by static shocks and stray waves of short duration and thus the time during which the disturbance can act upon the receiving device is prolonged to about the same degree as the signal.

One of the objects of my invention is to provide a means for prolonging the time during which the signal can act with accumulative effect on the receiving device considerably beyond the time during which disturbances can act.

In attaining this object I make use of a tuned circuit of lower than radio frequency but above audibility, for effecting the prolongation of the time during which the signal and disturbance may be compared. The desired lower frequency is provided by means of interference beats between two radio frequencies. Both of these frequencies may be produced at the sending station, or one of them may be produced at the receiving station. I also provide means for producing, transmitting and receiving both radio frequencies. An arrangement of this kind is more effective than one employing a single radio frequency because it is more selective and proof against interference, both frequencies being necessary to produce an impression in the receiver. Also when means is provided at the sending station for establishing the beat frequency a less delicate adjustment of frequency is necessary than when the beat frequency is the result of the difference between two high frequencies. A further object of my invention is to provide means for efficiently producing signals of the desired character. Another object of my invention is to provide suitable receiving apparatus for rendering audible at the receiving station the signals sent from the transmitting station and for enabling the receiving operator to readily distinguish between effects produced by the static shocks and those produced by the desired signal. Still another object of my invention is to provide a means for limiting the amount of energy of the static shocks which can be transmitted to the receiving apparatus without at the same time limiting the energy of the signal which will act upon the receiving apparatus.

The features of my invention which I believe to be patentable are pointed out with particularity in the appended claims. The invention itself however, together with further objects and advantages thereof, will best be understood by reference to the following description taken in connection with the accompanying drawing in which Figs. 1, 2 and 3 illustrate different modifications of the circuit connections which may be employed in transmitting signals in accordance with my invention, and Figs. 4, 5, 6 and 7 show different modifications of the receiving circuits which may be employed.

In the form of transmitting system shown in Fig. 1, an alternator 1 supplies current of radio frequency to the antenna 2 through the coupling transformer 3. This alternator is designed to furnish continuous waves of a definite frequency and amplitude. Instead of transmitting the signals by waves of this nature, however, I produce amplitude pulsations in the waves supplied by the alternator of such a nature that the resulting wave may be resolved into two waves of different frequencies which may be transmitted simultaneously. In order to accomplish this I divide the antenna circuit into two branches and in these branches connect the windings of two magnetic controllers or amplifiers 4 and 5. Each of these branch circuits include half of the secondary of transformer 3, the middle point of which is grounded. The magnetic controllers or amplifiers which I prefer to use in the present case, both as to their construction and method of operation, are described in detail in my Letters Patent of the United States 1,328,797.

Each controller comprises a reactive winding consisting of two coils 6 and 7 wound upon independent magnetic cores 8 and 9. The two coils of each winding are connected in parallel with each other in the circuit and are so arranged that their magnetizing actions are opposite. Each magnetic controller is also provided with two controlling windings 10 and 11 wound around the magnetic cores 8 and 9 as indicated, so that magnetization produced by the currents in the controlling windings will be in the same direction in both cores. Controlling windings 11 are both supplied from the same source of current, which in the present case may be an alternator 12 of much lower frequency than that of alternator 1, yet having a frequency above the range of audibility. Controlling windings 10 are supplied with direct current from any suitable source, such, for example, as the direct current generator 13 shown in the drawing. The controlling windings 10 are so connected to the generator 13 that their magnetic effects upon the two controllers are opposite with respect to the instantaneous magnetic reactions set up in the controllers by current from generator 12. The controlling windings 10 and 11 are so proportioned and the current sources 12 and 13 so chosen and adjusted that the maximum ampere turns of winding 11 is approximately equal to the ampere turns of the controlling winding 10. As a result the controller 4 will have a maximum of controlling ampere turns when the controlling ampere turns of controller 5 is practically zero and vice versa. The characteristics of the controllers 4 and 5 are such that the impedance of each high frequency winding 6 and 7 varies between practically open circuit and short circuit when the controlling excitation varies from zero to maximum. Thus when the current wave of controlling alternator 12 is a maximum one of the controllers acts as a short circuit connecting the antenna to one terminal of the secondary of transformer 3 while the other controller interposes an impedance substantially equivalent to an open circuit in the connection to the other terminal. After the phase of the controlling current wave supplied by alternator 12 is changed 180 electrical degrees the other controller acts as a short circuit and the first as an open circuit, thus reversing the polarity of the radio frequency current led to the antenna. At intermediate points the voltage varies between these two extremes in accordance with the sine wave law. The current wave thus supplied to the antenna has an amplitude pulsation substantially in accordance with the sine wave law and the impulses in every other group of waves are opposite in phase to corresponding impulses in the intermediate groups of waves. The frequency of these amplitude pulsations is equal to the frequency or a multiple of the frequency of the alternator 12. For a description in greater detail of the operation of this arrangement reference may be had to my United States Patent 1,386,830.

The wave thus produced in the antenna may be resolved into two waves of constant amplitude, one having a frequency greater than that of the alternator 1 by an amount equal to the frequency of alternator 12 and the other having a frequency as much lower than that of the alternator 1. If either one of the magnetic amplifiers 4 and 5 were used alone it would be possible to transmit from a single antenna waves of any one of three frequencies, and, by providing multiple tuning of the antenna, waves of two or more frequencies may be transmitted simultaneously. For example, the variable inductance 14 may provide for one tuning and the variable condenser 15 in shunt to inductance 16 may provide for a second tuning at a different frequency. If, for example, alternator 1 has a frequency of 75,000 cycles and alternator 12, 5000 cycles, the antenna may

be tuned for 80,000 and 75,000 cycles; 80,000 and 70,000 cycles, or 75,000 and 70,000 cycles. By providing a third tuned circuit in multiple with the antenna all three frequencies may be transmitted simultaneously. When both magnetic amplifiers are used in the manner described the current component of fundamental frequency is suppressed and the antenna will be tuned for the two frequencies into which the resultant wave may be resolved, that is, one frequency higher than that of the alternator 1 by an amount equal to the frequency of the alternator 12 and the other frequency as much lower than that of the alternator 1. Variable condensers 17 may be connected in series with the windings 6 and 7 of the controllers to neutralize the leakage inductance in the windings thereof so as to bring the minimum value of the impedance as near as possible to a short circuit. It may also be desirable to employ condensers 18 in series with each branch of the high frequency winding of such a value that they offer very little impedance to the flow of the high frequency current from alternator 1, but a high impedance to currents of the frequency of alternator 12, which may be induced in the closed circuit formed by the two windings 6 and 7.

With the system which has been described above, in order to produce the amplitude pulsations of current, the output delivered by the alternator 1 to the antenna must be periodically varied between a maximum and a minimum. As a result the energy output which can be obtained from the alternator is less than it would be if it delivered full power continuously. To overcome this disadvantage an oscillating circuit may be provided which is capable of storing up considerably more energy than the alternator must give out during one period of the amplitude pulsations. By this means energy may be stored up in the oscillating circuit when the energy taken by the antenna is a minimum and when the energy taken by the antenna is a maximum energy may be drawn momentarily from the oscillating circuit at a greater rate than the alternator is able to deliver. In the present case the oscillating energy storage circuit may be made up of the primary of transformer 3 and condenser 19.

In order to transmit telegraphic signals by the system described a key 20 may be inserted in the circuit of alternator 12. When this key is open the impedance of the two controllers 4 and 5 will be equal and since they are connected in opposition to each other no current will be supplied to the antenna. When the key is closed currents having amplitude pulsations will be supplied to the antenna in the manner described.

In Fig. 2 I have shown an organization in which a single magnetic controller 21 is employed to secure the desired frequency splitting. In this case a single controlling winding 22 is shown and the alternator 12 is connected to the winding in series with a battery 23 having a potential substantially the same as that of alternator 12. The controlling windings 6 and 7 of this controller are connected in shunt to the secondary of transformer 3 instead of in series as in the arrangement shown in Fig. 1. An oscillating energy storage circuit comprising inductance 24 and condenser 25 connected in shunt to the secondary of transformer 3 functions in a manner similar to that of the energy storage circuit described in connection with the arrangement of Fig. 1. Two different antenna tunings may be secured by means of the variable inductance 26 and the variable condenser 27 and inductance 28 in shunt to a portion of inductance 26.

In Fig. 3 I have illustrated another modification in which the circuit which provides the second tuning for the antenna is also utilized as an energy storage circuit. Controller 5 in this case is connected in series with the antenna and controller 4 in a circuit in shunt to the secondary of transformer 3. The main antenna tuning is made by means of variable inductance 30 and the second tuning by variable condenser 31. This condenser in connection with inductances 32 forms an energy storage circuit. When controller 4 forms a short circuit if the phase relations of the currents are properly adjusted energy will be delivered to the storage circuit by means of transformer 33 and when controller 5 forms a short circuit energy will be delivered to the antenna from the alternator and the storage circuit.

In Fig. 4 I have indicated a simple form of receiving outfit which may be employed for receiving the signals transmitted by the means illustrated in Fig. 1, 2 and 3. In this case the signals made up of continuous waves having amplitude pulsations which result from the combination of the two frequencies transmitted are received by the antenna 34 which may be aperiodic or strongly damped, so that it will not be set into oscillation by static shocks. The signals thus received are impressed upon a cirrcuit which includes the grid 35 of an amplifier 36 of the electron discharge type comprising a heated cathode 37 and cooperating anode 38 with a battery 39 in the external circuit between cathode and anode. A few of the cells of this battery 40 may also be connected between cathode and grid in order to adjust the grid potential to a value at which the device is most efficient in amplifying the received signals. The current flowing in the circuit of this amplifier which comprises electrodes 37 and 38, and battery 39, which for convenience in descrip-

tion I designate the plate circuit, will be a pulsating current. The alternating current component of this current will flow in the secondary of transformer 41 and the circuit 42 which comprises the secondary of this transformer, inductance 43, and variable condenser 44 is tuned to the frequency of the amplitude pulsations of the waves which are to be received. The impulses act accumulatively until the current in circuit 42 has attained its maximum amplitude. If this circuit is a highly tuned circuit the time during which the current amplitude will be built up may be as much as that covered by 100 cycles of the amplitude pulsations; that is, if the frequency of these pulsations is 5000 cycles it may require 1/50 of a second for the oscillating circuit 42 to reach this maximum. If the radio frequency is 50,000 cycles the time for the oscillating circuit 42 to reach its maximum may correspond to 1000 cycles of the radio frequency and thus it is apparent that the energy stored in the oscillating circuit may represent the accumulated energy of 1000 cycles of the radio frequency. The antenna as well as the secondary oscillating circuit will also be affected by static shocks and to a certain degree accumulatively. However, it can be proven by the law of probability that the accumulative effect of successive static shocks in any oscillating circuit increases by the square root of the time in which these irregular shocks are taking place, whereas the oscillations due to the signal, if this is a continuous wave, increase arithmetically until the circuit has approached its maximum amplitude. While it can therefore not be expected that the secondary oscillating circuit will be free from static disturbances, the relative intensity of the signal and the static is greater the longer the time during which the energy of the signal can accumulate. In order to make the signal audible a local source of alternating current 45 of slightly different frequency from that of the current in circuit 42 is introduced in the grid circuit of amplifier 46, so as to create beats in the receiver 47 which is inserted in the plate circuit of this amplifier and detect the current of secondary frequency by the well known heterodyne method. In previous attempts which have been made to suppress static by tuning for an audible group frequency in a spark system or its equivalent, the operator has been required to distinguish between the signal and static by the pitch of the note which is heard in the receiving telephone. In this case although tuning is applied to the circuit of the audible group frequency and the intensity of the currents produced by static relative to the intensity of the signal has been decreased in somewhat the same manner as that described, there has been practically no gain by reason of this action because of the fact that the currents produced by static are changed to a pitch for which the ear is particularly sensitive, and in fact, are changed to a pitch similar to the signal. In my system, however, in which the secondary tuning is at an inaudible frequency, the receiving device discriminates between currents of the static and the signal purely by magnitude, and the tone pitch at which the signal is received is regulated independently by the heterodyne receiver without reference to the frequency of the discriminating oscillatory circuit.

In Fig. 5 I have shown a double tuned antenna, the branch of the antenna comprising inductance 48 and variable condenser 49 being resonant to one of the frequencies sent out at the transmitting station and the branch which comprises inductance 50 and variable condenser 51 being resonant to the other frequency which is transmitted. The two frequencies thus received in coils 52 and 53 will combine to produce amplitude pulsations and these amplitude pulsations may be amplified by an amplifier such as the amplifier 36 in Fig. 4, or may be directly impressed upon the secondary oscillating circuit 42 of Fig. 4.

In the arrangement shown in Fig. 6 I have illustrated an additional safeguard against the transmission of static shocks to the receiving circuit in which an iron core transformer is substituted for the transformer 41 of Fig. 4. This transformer is so designed that the normal strength of a signal will work the iron at its maximum permeability whereas any sudden and excessive shocks by static will saturate the iron so that full force of the shock will not be transmitted to the secondary. This transformer is, in other words, a voltage limiting transformer which is capable of transmitting without saturation a voltage only slightly in excess of that produced by the signals. As indicated in the drawing the transformer in the present case comprises two cores 53 and 54, each having a primary winding 55 and a secondary winding 56. In order to regulate the saturation of this transformer a third winding 57 which is common to the two cores, is supplied with a direct current from battery 58, and the value of the current thus supplied may be adjusted in order to secure the desired degree of saturation.

In Fig. 7 I have shown another modification of receiving circuit in which an inductance 59, which may be similar in structure to the magnetic controllers used at the transmitting station, is inserted in the plate circuit of amplifier 36. The saturation of the iron core of this inductance is adjusted by varying the current in winding 60 supplied by battery 61 so that increase of current in

the windings 62 brings the inductance closer to perfect tuning for the frequency of the current which results from the combination of the two sets of waves received. This change in current will change the inductance and this change in inductance will cause a further change in the current, this process taking place accumulatively until maximum amplitude is reached. This accumulative building up of the current resembles the self excitation of a dynamo-electric machine and takes an appreciable time. In this way it is possible to design an oscillating circuit with very high decrement and at the same time make a portion of the tuning curve as sensitive as desired or even make it unstable. If currents produced by strays and of greater magnitude than the signal currents act upon this inductance they will tend to change the tuning beyond the point of maximum sensitiveness and as a result will produce but slight increase in the current flowing in the circuit.

In the above description of receiving apparatus it has been assumed that the signals which are to be received are produced by means of two different frequencies in the manner set forth in connection with Figs. 1, 2 and 3. It will, however, be apparent that similar results may be obtained by producing a current having amplitude pulsations by the interaction between signals produced by a single frequency and a local source of current differing therefrom in frequency by an amount above audibility. Such an arrangement is illustrated in Figs. 4 and 6 in which a high frequency source of current 63 is coupled to the antenna 34 by means of a coupling transformer 64 which may be coupled to the coil 65 which supplies the amplifier 36, or may be connected to any suitable point in the receiving system.

The method of and apparatus for transmitting signals, shown in Figs. 1, 2 and 3 of this application, are described and claimed in my copending application Serial No. 244,839, filed July 15, 1918, which is a division of this application.

The method of and apparatus for receiving signals, shown in Figs. 4, 5, 6 and 7 of this application, are described and claimed in my copending application Serial No. 244,840, filed July 15, 1918, which is a division of this application.

It will of course be understood that the double tuned antenna may be used with the receiving circuits illustrated in Fig. 7 as indicated either with or without an amplifier, and that many modifications may be made in the arrangement of the transmitting and receiving apparatus without departing from the scope of my invention as set forth in the appended claims.

What I claim as new and desire to secure by Letters Patent of the United States, is:—

1. The combination in a wireless signaling system of means for transmitting signals by waves of two different radio frequencies simultaneously radiated from an antenna, means at a receiving station for simultaneously receiving the waves of different frequencies, means for causing the two sets of waves to interact to produce a current having amplitude pulsations of a frequency equal to the difference between the two radio frequencies but above audibility, an oscillating circuit resonant to this last frequency, and means cooperating with the oscillating circuit for detecting the signals.

2. The combination in a wireless signaling system of means at a transmitting station for producing radio frequency currents having definite amplitude pulsations of a frequency above audibility, a transmitting antenna tuned to two different frequencies, means at a receiving station for changing the radio frequency currents received into alternating current of a frequency corresponding to the amplitude pulsations of the currents produced at the transmitting station, and means for the selective reception and detection of this current.

3. The combination in a wireless signaling system of means at a transmitting station for producing radio frequency currents having definite amplitude pulsations of a frequency above audibility, a double tuned antenna at a receiving station for receiving signals transmitted by the currents thus produced at the transmitting station, means for changing the radio frequency currents received by this antenna to an alternating current of a frequency corresponding to the amplitude pulsations of the currents produced at the transmitting station, and means for the selective reception and detection of this current.

4. The combination in a wireless signaling system of transmitting apparatus comprising a source of energy of radio frequency, a second controlling source of energy of much lower frequency but above audibility for controlling the flow of current from the radio frequency source so that the resultant radiation consists of waves of two radio frequencies differing by an amount at least as great as the frequency of the controlling source, means at a receiving station for combining the currents of two radio frequencies and producing an alternating current of a frequency corresponding to the frequency of the controlling source at the sending station, and means for the selective reception and detection of the current thus produced.

5. The combination in a wireless signaling system of transmitting apparatus comprising a source of energy of radio fre-

quency, a second controlling source of energy of much lower frequency but above audibility for controlling the flow of current from the radio frequency source so as to produce amplitude pulsations therein of a frequency equal to that of the controlling source, a double tuned antenna for transmitting waves of two different radio frequencies which may be derived from the current having amplitude pulsations, means at a receiving station for receiving and combining the waves of two radio frequencies and producing an alternating current of a frequency corresponding to the frequency of the controlling source in the sending station, and means for the selective reception and detection of the current thus produced.

6. The combination in a wireless signaling system of transmitting apparatus comprising a source of energy of radio frequency, a second controlling source of energy of much lower frequency but above audibility for controlling the flow of current from the radio frequency source so as to produce amplitude pulsations therein of a frequency corresponding to that of the controlling source, a double tuned antenna at a receiving station for receiving waves of two different radio frequencies derived from the current at the transmitting station having amplitude pulsations, means at the receiving station for combining the waves of two different radio frequencies to produce an alternating current of a frequency corresponding to the frequency of the controlling source at the sending station and means for the selective reception and detection of the current thus produced.

7. The combination in a wireless signaling system of means at a transmitting station for producing currents of radio frequency having amplitude pulsations of sine wave form and of a frequency above audibility, means for conducting this current through the antenna circuit which is resonant to two frequencies differing from one another by an amount above audibility in order to radiate two sets of waves of different frequencies, a double tuned antenna at a receiving station for receiving waves thus transmitted, means for producing from the waves received an alternating current of a frequency corresponding to the difference in frequency of the two sets of waves and means for selectively receiving and detecting the alternating current thus produced.

8. The method of wireless signaling which consists in transmitting signals by means of two sets of waves of constant amplitude and radio frequency differing in frequency by an amount above audibility, receiving the waves thus transmitted and combining them to produce an alternating current having a frequency corresponding to the difference in frequency of the two sets of waves, accumulating the energy of this alternating current in a resonant circuit and utilizing the accumulated energy for the operation of suitable detecting apparatus.

9. The method of wireless signaling which consists in producing at a transmitting station a current of radio frequency having amplitude pulsations of a much lower frequency but above audibility, transmitting signals by means of waves derived from the current thus produced, receiving the transmitted waves and producing from the received waves an alternating current having a frequency corresponding to the frequency of the amplitude pulsations of the current produced at the transmitting station, accumulating the energy of this alternating current in a resonant circuit and utilizing the accumulated energy for the operation of suitable detecting apparatus.

10. The method of wireless signaling which consists in producing at a transmitting station two sets of waves of constant amplitude and radio frequency differing in frequency by an amount above audibility, transmitting signals by means of these waves, causing the waves transmitted to interact at a receiving station to produce alternating current having a frequency corresponding to the difference in frequency of the two sets of waves transmitted, accumulating the energy of this current in a resonant circuit and causing the current in the resonant circuit to interact with a current of different frequency to produce current pulsations of audible frequency.

11. The method of wireless signaling which consists in producing at a transmitting station a current of radio frequency having amplitude pulsations of much lower frequency but above audibility, transmitting signals by means of waves derived from the current thus produced, receiving the transmitted waves and producing from the received waves an alternating current having a frequency corresponding to the frequency of the amplitude pulsations of the current produced at the transmitting station, accumulating the energy of this current in a resonant circuit and causing the current in the resonant circuit to interact with a current of different frequency to produce current pulsations of audible frequency.

12. The method of wireless signaling which consists in producing at a transmitting station a current of radio frequency having definite amplitude pulsations of a frequency above audibility, transmitting signals by means of waves derived from the current thus produced, receiving the waves thus transmitted in a multiple circuit tuned to two different frequencies, producing by means of the waves thus received an alternating current of a frequency corresponding

to the amplitude pulsations of the current produced at the transmitting station and selectively receiving and detecting the alternating current thus produced.

13. The method of wireless signaling which consists in transmitting signals by means of two sets of waves of constant amplitude and radio frequency differing in frequency by an amount above audibility, receiving the waves thus transmitted, combining them to produce an alternating current having a frequency corresponding to the difference in frequency of the two sets of waves, and selectively receiving and detecting the alternating current thus produced.

14. The method of wireless signaling which consists in producing at a transmitting station a current of radio frequency having amplitude pulsations of much lower frequency but above audibility, conducting this current through an antenna circuit which is resonant to two frequencies differing from one another by an amount above audibility and thereby radiating waves of two different frequencies, receiving the waves thus radiated and combining them to produce an alternating current having a frequency corresponding to the difference in frequency of the two sets of waves, and selectively receiving and detecting the alternating current thus produced.

15. The method of wireless signaling which consists in transmitting signals by means of two sets of waves of constant amplitude and radio frequency differing in frequency by an amount above audibility, receiving these waves in a multiple circuit which is resonant to the two frequencies, combining the received waves to produce an alternating current having a frequency corresponding to the difference in frequency of the two sets of waves and selectively receiving and detecting the alternating current thus produced.

16. The method of wireless signaling which consists in producing at a transmitting station a current of radio frequency having amplitude pulsations of much lower frequency but above audibility, conducting this current through an antenna circuit which is resonant to two frequencies differing from one another by an amount above audibility and thereby radiating waves of two different frequencies, receiving the waves thus radiated in a multiple antenna circuit which is resonant to the two frequencies transmitted, combining the received waves to produce an alternating current having a frequency corresponding to the difference in frequency of the two sets of waves, and selectively receiving and detecting the alternating current thus produced.

17. The method of wireless signaling which consists in producing amplitude pulsations in the flow of power from a high frequency source in such a way that the character of the signals depends upon such amplitude pulsations, tuning an antenna at one station for more than one frequency so that the continuous wave components into which the wave having amplitude pulsations can be resolved are transmitted efficiently through the several corresponding frequencies for which the antenna is tuned, and recombining the several components into a current having amplitude pulsations similar to those originally produced.

18. The method of wireless signaling which consists in the use of continuous wave signals having amplitude pulsations, resolving the signal wave into its continuous wave components, passing these components through circuits at one station which are in resonance with the frequencies into which the signal wave has been resolved, and recombining these continuous wave components to produce another current similar in nature to that of the signal current.

19. The method of receiving wireless signals produced by two transmitted currents of radio frequency differing from each other in frequency by an amount above audibility, which consists in combining the two currents at a receiving station to produce an alternating current having a frequency corresponding to the difference in frequency of the two currents, accumulating the energy of this alternating current in a resonant circuit, and utilizing the accumulated energy for the operation of suitable detecting apparatus.

20. The method of receiving wireless signals produced by two transmitted currents of radio frequency differing from each other by an amount above audibility, which consists in combining the two currents at a receiving station to produce an alternating current having a frequency corresponding to the difference in frequency of the two currents, accumulating the energy of this current in a resonant circuit, and causing the current in the resonant circuit to interact with a current of different frequency to produce current pulsations of audible frequency.

21. The combination in a wireless signaling system, of means at a receiving station for producing by means of two continuous wave signaling currents derived from separate circuits at the receiving station a radio frequency current having amplitude pulsations of much lower frequency, but above audibility, means for producing therefrom an alternating current having a frequency corresponding to the amplitude pulsations, means comprising a resonant circuit for accumulating the energy of this current, and means for causing the accumulated energy

to interact with energy from a source of different frequency to produce a current of audible frequency.

22. The combination in a wireless signaling system, of means at a receiving station for producing in two separate circuits two currents of radio frequency, one of which corresponds to the frequency of the signaling current and the other differing therefrom by an amount above audibility, means for combining the two currents to produce an alternating current having a frequency corresponding to the difference in frequency between the two currents, and means for selectively receiving and detecting the current thus produced.

23. The method of overcoming the effects of static disturbances in a wireless signaling system, which consists in employing a signaling current of radio frequency having amplitude pulsations of much lower frequency, producing from the signaling current an alternating current having a frequency corresponding to the amplitude pulsations and passing this current through a circuit containing a device for limiting the energy passing therethrough to a predetermined value, and then through a circuit which is resonant to the frequency of the alternating current.

24. The method of overcoming the effects of static disturbances in a wireless signaling system, which consists in transmitting signals by means of currents of two different radio frequencies, receiving and amplifying the signals thus transmitted, producing from the amplified signal currents an alternating current having a frequency corresponding to the difference in frequency of the two radio frequency currents, and passing this current through a circuit containing a device for limiting the energy passing therethrough to a predetermined value, and then through a circuit which is resonant to the frequency of the alternating current.

25. The combination in a wireless receiving system of an antenna, means for amplifying signaling currents received thereby, a circuit through which the amplified current will flow and an iron core inductance included in said circuit, the core of said inductance beng saturated to such a degree that the current which will flow through the inductance cannot exceed a predetermined desired value.

26. In a wireless receiving system, an oscillating circuit, an iron core inductance in said circuit and means for adjusting the permeability of said iron core, the iron core being normally so adjusted that the time required for oscillations to build up to a maximum is greater than the time corresponding to the natural oscillations of a circuit having corresponding inductance and capacity.

27. The combination in a wireless signaling system, of a receivng antenna having two branches tuned to two radio frequencies differing from each other by an amount above audibility, a circuit associated therewith which is tuned to a frequency equal to the difference in frequency of the two radio frequency branches, and means for detecting the current in said circuit.

28. The combination in a wireless signaling system, of a receiving antenna tuned to two radio frequencies differing from each other by an amount above audibility, means for producing from the waves received thereby an alternating current having a frequency corresponding to the difference in frequency of the two sets of waves received, and means for selectively detecting the current thus produced.

29. The combination in a wireless signaling system, of means at a receiving station for simultaneously receiving signal waves of two radio frequencies differing from each other by an amount above audibility, means for causing the two sets of waves to interact to produce a current having amplitude pulsations of a frequency corresponding to the difference in frequency of the two currents received, and means in the receiving circuit whereby the energy of the current thus produced may be accumulated for a greater length of time than the naural oscillations of the radio frequency current.

30. The combination in a wireless signaling system, of means at a receiving station for simultaneously receiving signal waves of two different radio frequencies, means for causing the two sets of waves received to interact to produce a current having amplitude pulsations of a frequency equal to the difference between the two radio frequencies, but above audibility, an oscillating circuit resonant to this last frequency, and means cooperating with the oscillating circuit for detecting the signals.

31. The combination in a wireless signaling system, of means at a receivng station for simultaneously receiving signal waves of two different radio frequencies, means for causing the two sets of waves to interact to produce a current having amplitude pulsations of a frequency corresponding to the difference between the two radio frequencies, and means in the receiving circuit whereby the energy of the current thus produced may be accumulated for a greater length of time than the natural oscillations of the radio frequency currents.

32. The method of receiving wireless signals produced by two currents of radio frequency differing from each other in frequency by an amount above audibility, which consists in utilizing an antenna tuned to the two frequencies, producing by means of the waves thereby received an alternating current having a frequency corresponding to

the difference in frequency of the waves received and selectively detecting the alternating current thus produced.

33. The method of receiving wireless signals produced by two currents of radio frequency differing from each other in frequency by an amount above audibility, which consists in utilizing an antenna tuned to the two frequencies, producing by means of the waves thereby received an alternating current having a frequency corresponding to the difference in frequency of the two sets of waves received, accumulating the energy of this current in a resonant circuit and causing the current in the resonant circuit to interact with a current of different frequency to produce current pulsations of audibile frequency.

34. In a wireless receiving system, an oscillating circuit having an iron core inductance included therein, said iron core inductance being so adjusted that an increase of current accumulatively changes the inductance in the direction required for exact tuning to a desired frequency whereby the circuit is made so sensitive as to approach instability.

35. A receiving device for a wireless signaling system, comprising an oscillating circuit having therein an iron core inductance and means for adjusting the saturation in the iron core the saturation of said iron core being normally adjusted so that the oscillating circuit approaches a state of instability on account of the change in permeability of the iron with changes in the current in the circuit.

36. A receiving device for a wireless signaling system, comprising an oscillating circuit having therein an iron core inductance which has, in addition to the alternating current winding, a winding supplied by a variable direct current for adjusting the saturation in the iron core the saturation of said iron core being normally adjusted to such a point on the saturation curve that the oscillating circuit approaches a state of instability on account of the effect of the alternating current upon the permeability of the iron, whereby the time required for building up oscillations to a maximum is prolonged beyond the time required for a corresponding circuit with constant inductance.

37. In electrical signaling, the method which consists in producing a signal-representing undamped current of radio frequency varying in amplitude at predetermined lower frequency above audibility, converting the same into a current of frequency corresponding with said predetermined frequency, producing a current reacting with said converted current to produce beats, and utilizing said beats whose frequency is the difference between the frequency of said converted current and the frequency of said third named current to reproduce the signal.

38. In electrical signaling, the method which consists in producing a signal-representing undamped current of radio frequency varying in amplitude at predetermined lower frequency above audibility, converting the same by rectification into a current of frequency corresponding with said predetermined frequency, producing a current reacting with said rectified current to produce audible beats, and utilizing said beats whose frequency is the difference between the frequency of said rectified current and the frequency of said third named current to reproduce the signal.

39. The combination with transmitting apparatus comprising means for producing sustained high frequency energy varying in amplitude at a predetermined frequency, means for controlling the energy to represent a signal or message, of receiving apparatus comprising means for producing a current of frequency differing from said predetermined frequency to produce beats, and a translating device utilizing the beats whose frequency is the difference between said predetermined frequency and the frequency of said current to reproduce the signal or message.

40. In electrical signaling, the method which consists in transmitting a signal-representing current of radio frequency varying in amplitude at predetermined lower frequency, producing a current of frequency reacting with the received current to produce beats, and utilizing said beats whose frequency is the difference between said predetermined frequency and the frequency of said second named current to reproduce the signal.

41. In electrical signaling, the method which consists in transmitting a signal-representing current of radio frequency varying in amplitude at predetermined lower frequency above audibility, producing a current of frequency reacting with the received current to produce beats of audible frequency, and utilizing said beats whose frequency is the difference between said predetermined frequency and the frequency of said second named current to reproduce the signal.

In witness whereof, I have hereunto set my hand this 17th day of April, 1916.

ERNST F. W. ALEXANDERSON.