June 18, 1968 N. W. SIMANDL ETAL 3,388,789

COMPARTMENTED PACKAGE

Filed May 5, 1967 3 Sheets-Sheet 1

Fig. 1

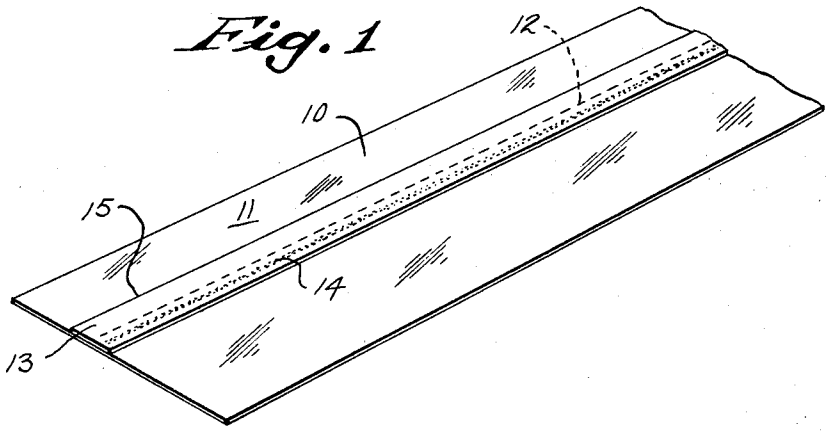

Fig. 2

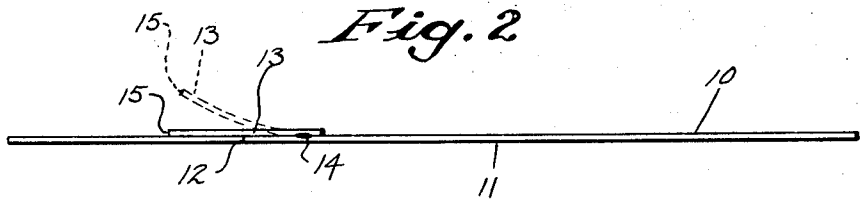

Fig. 3

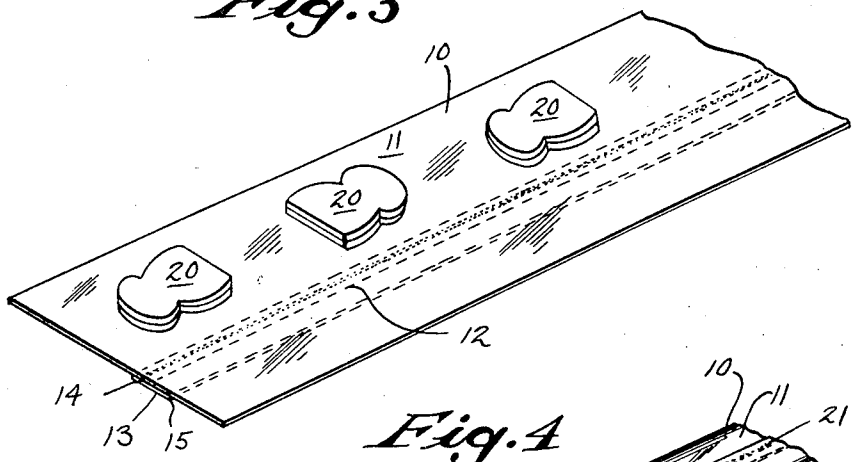

Fig. 4

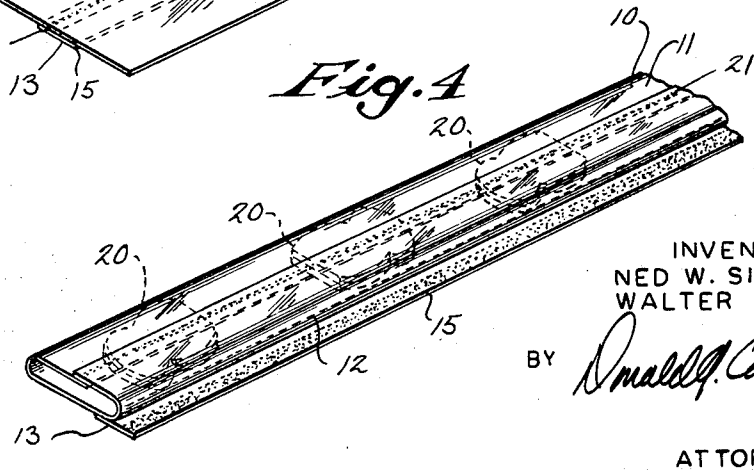

INVENTORS
NED W. SIMANDL
WALTER J. YAKICH

BY Donald J. Carson

ATTORNEY

June 18, 1968 N. W. SIMANDL ET AL 3,388,789

COMPARTMENTED PACKAGE

Filed May 5, 1967 3 Sheets-Sheet 2

Fig. 5

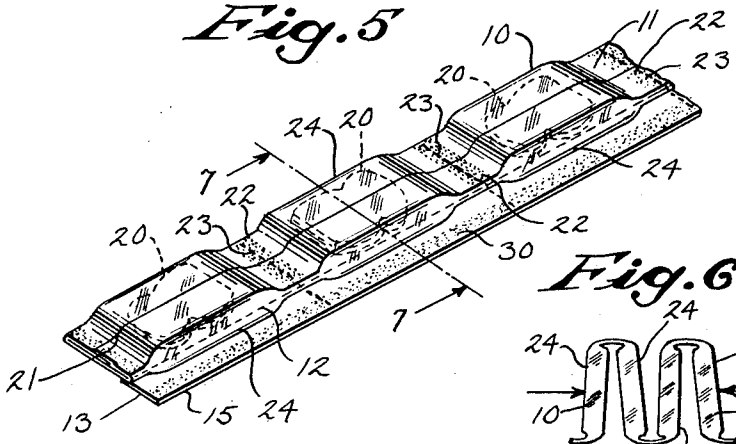

Fig. 6

Fig. 7

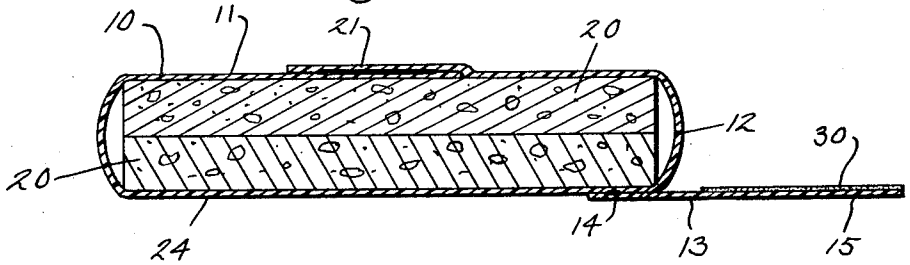

Fig. 8

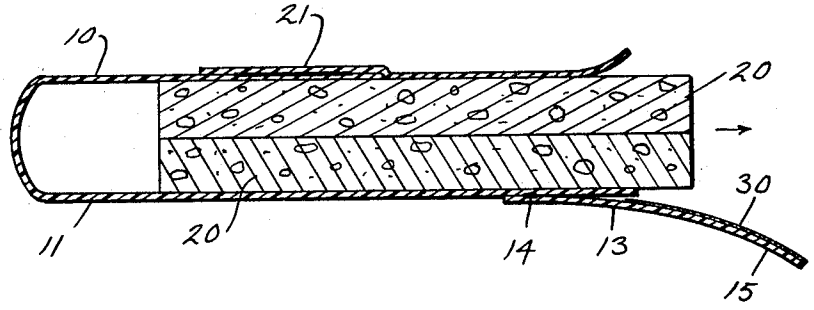

Fig. 9

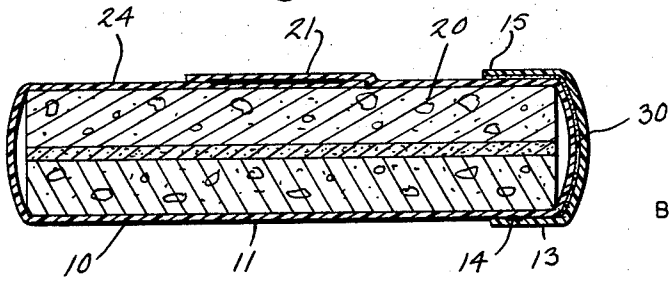

INVENTORS
NED W. SIMANDL
WALTER J. YAKICH

BY Donald J. Carter

ATTORNEY

June 18, 1968 N. W. SIMANDL ETAL 3,388,789

COMPARTMENTED PACKAGE

Filed May 5, 1967 3 Sheets-Sheet 3

Fig. 10

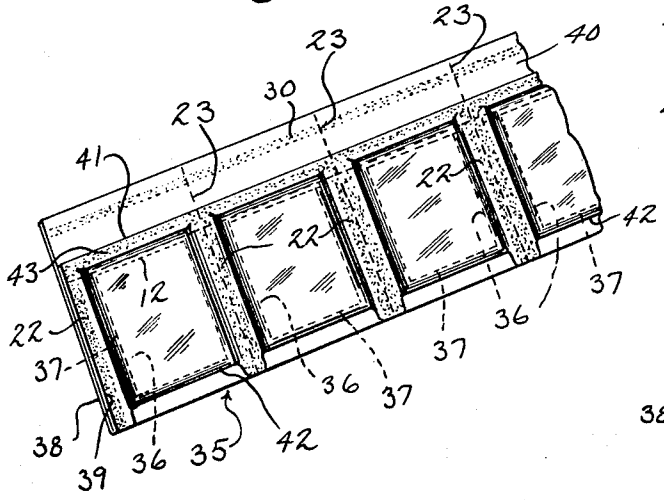

Fig. 11

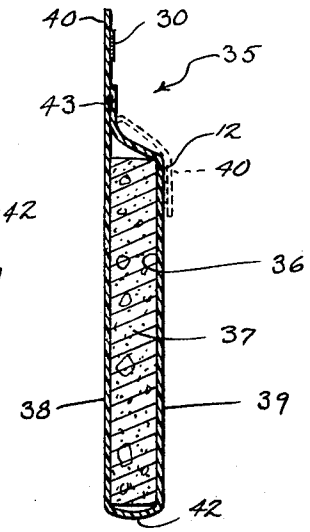

Fig. 12

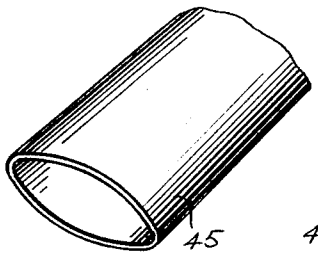

Fig. 12a

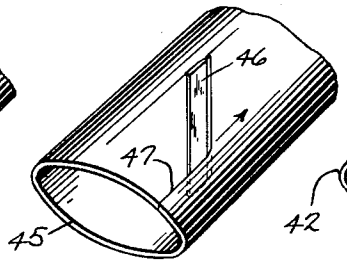

Fig. 12b

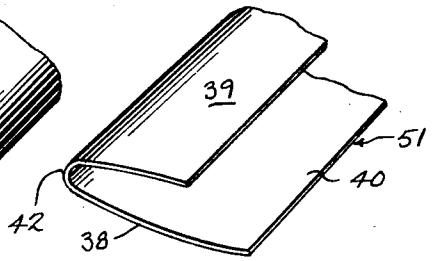

Fig. 13

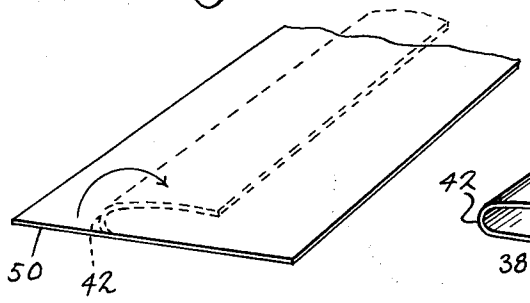

Fig. 13a

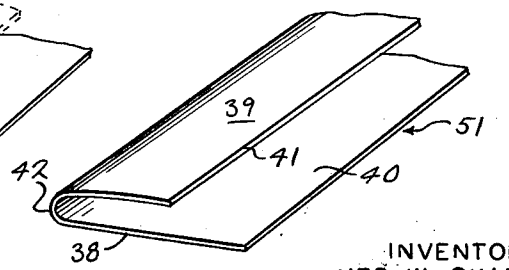

INVENTORS
NED W. SIMANDL
WALTER J. YAKICH

BY

ATTORNEY

United States Patent Office 3,388,789 Patented June 18, 1968

3,388,789

COMPARTMENTED PACKAGE

Ned W. Simandl, Brown Deer, and Walter J. Yakich, Oak Creek, Wis., assignors to Milprint, Inc., Milwaukee, Wis., a corporation of Delaware

Filed May 5, 1967, Ser. No. 636,339
10 Claims. (Cl. 206—56)

ABSTRACT OF THE DISCLOSURE

A package having a plurality of independent but separable commodity-holding compartments each of which has a tear zone extending across it to provide an access opening and in which the film from which the package is made includes a portion that can be extended over the tear zone to close an access opening formed by rupture along the tear zone, thus providing a reclosable package after initial opening of the compartment along the tear zone.

BACKGROUND OF THE INVENTION

(1) *Field.*—This invention relates to the field of pouch-like containers made of flexible packaging films for packaging edible and/or inedible commodities.

(2) *Prior art.*—The typical closed package formed of flexible film has been a single-use pouch or bag (both terms are used interchangeably herein) container that has not offered effective means for closing the container after it has been first opened. Thus a polyethylene pouch may be closed or sealed on all four of its sides to provide a sealed package, but once it was opened to remove all or part of the packaged commodity the pouch itself usually had little or no use. Also, although the packaging of a relatively large quantity of a commodity in the form of discrete, individual portions or servings is known, the containers for each portion have been of little value after being opened and/or being separated from the remaining quantity of the material.

SUMMARY

This invention, in contrast, provides a package which may have a plurality of separably interconnected individual compartments, each having a tear zone extending across the compartment, and further having a movable portion which can be moved into position to close an access opening formed by rupture along the tear zone. The once-opened container can be used to protect any remaining contents or it can be emptied of its original contents and reused for other packaging purposes. In one form, a composite dual-member web or film is used to construct the closed containers and has a base sheet adapted for separation along a tear zone and a second narrow, sheet strip or web fixed or hinged to the base sheet and adapted to cover the tear zone after the container has been opened therealong, thereby allowing resealing or reclosure of the container. In another aspect, a single member or flat film is disclosed which is folded in such a manner as to provide a longitudinal tubular portion for the packaging of commodities and an extension flap along one edge thereof to be used for reclosure of access openings formed in containers defined from the tubular portion.

The main objects of this invention are to provide a container having access opening means defined in a body wall and cover means for covering the access means after the first opening thereof; to provide a package having a plurality of connected, but separable individual compartments in which each compartment has a tear zone for opening and a member for closure of the opening; and

to provide single member and dual-member flexible films for the formation of the packages as defined. Another is to devise a tubular package which can be made on form-and-fill type packaging machines and result in containers with a movable closure flap along an exterior wall portion without requiring structural additions after the containers have been formed. A more specific object is to provide the new or improved details of structure or method hereinafter claimed.

DESCRIPTION OF DRAWINGS

FIGS. 1–9 show a dual-member film for making packages according to this invention, with FIGS. 1 and 2 showing, respectively, top and end views of the film and FIGS. 3–5 illustrating a sequence of method steps for utilizing the film to form containers and fill them with packaged articles as follows: FIG. 3 shows the initial step of placing articles on the flat film, FIG. 4 is an intermediate step wherein the sheet has been folded into tubular form, and FIG. 5 illustrates a final step in which the tube of film has been transversely sealed to define individual container compartments. FIG. 6 shows a folded package made from the above film of this invention. FIG. 7 is a sectional view illustrating a closed individual container before the initial opening, FIG. 8 is a sectional view illustrating the container when opened and FIG. 9 is a view showing the reclosure of the once-opened container.

FIGS. 10 and 11 are front and sectional views of a package similar to the above but made from a single member film. FIGS. 12–12*b* show the use of a tube of film to make the package of FIG. 10 and FIGS. 13 and 13*a* show the use of a flat film in its manufacture.

DESCRIPTION OF PREFERRED EMBODIMENTS

Materials useful for the films described below are the flexible films typically used in the packaging of food and non-food articles. They may be made of organic plastic film such as polyethylene, polypropylene, vinyl chloride, polyethylene terephthalate, Saran, etc.; cellulosic or cellulose ester films such as cellophane; paper materials such as glassine, waxed paper, etc.; or also metallic foil films such as aluminum foil. Generally, they will be in the range of ½ to 10 mils thick, although thicker films can be used. The films can have one or more plies of the same or dissimilar materials and can carry functional coatings such as barrier coating, heat seal coatings, etc. Materials that are heat sealable are most useful in the practice of this invention since they allow facile and quick formation of the film and of containers from the film. The heat seal property can be obtained either through the use of inherently heat sealable material such as low density polyethylene or by the application of suitable heat seal coatings to films which are either inherently non-heat sealable or difficult to heat seal satisfactorily on commercial packaging machines.

FIGS. 1–9

FIG. 1 shows a composite flexible packaging film **10** according to this invention which comprises a base sheet **11**, a longitudinal tear zone **12** defined therein, and a narrow auxiliary sheet or strip **13** joined to the base sheet along a seam **14** that is parallel to but spaced from the tear zone **12**. The auxiliary sheet **13** extends across the tear zone so as to have a marginal portion **15** on the opposite side thereof from the seam **14**.

The tear zone **12** may be defined in the base sheet **11** by a variety of methods typically used in the converting art. Thus it may comprise a series of perforations, interrupted spaced slits, or it may comprise tear string means as are used in the packaging field. With an appropriate type of base film material, such as a multiple-ply laminate, the tear zone may be defined by a continuous score line

extending partly through the material or through one or some but not all of the plies from which it is made.

The sectional view of FIG. 2 further illustrates the construction of the film **10** and, as indicated by the dotted lines, the auxiliary strip **13** is to be movable relative to the base film about the seam **14** so that it can be raised or lowered with respect to the base sheet. the seam **14** may be a heat seal seam where the film is made of heat sealable materials, an adhesive or glue type seam, or a mechanical joinder of the two elements with suitable fasteners.

FIGS. 3–5 illustrate a series of steps in a method for the formation of containers of this invention with the preceding film. In FIG. 3, the flat film **10** is advanced or arranged with the longitudinal strip **13** positioned downwardly and articles **20** are placed on the opposite surface of the film in any desired spaced relationship. Next, in FIG. 4, the film **10** is folded into tubular form with its longitudinal edge portions overlapped and joined together along longitudinal seam **21**, illustrated herein as a heat seal seam formed by suitable apparatus not shown. Although a lap type seam is illustrated in the drawings, a fin seam may also be utilized. The auxiliary strip **13** may then project beyond the edge of the tube of film thusly formed. Individual packages are then formed in the steps shown in FIG. 5 wherein transverse seams **22** are formed across the web at right angles to the strip **13**. The transverse seams **22** also are preferably heat seals and as shown in the drawings there may be a pair of spaced heat seal seams **22** between each article. Either simultaneous with the formation of the transverse seams **22**, or subsequent thereto, transverse tear zones **23** are formed across the tubular film between each seam **22**. The transverse tear zones **23** extend across the auxiliary strip **13** in the manner illustrated.

The tube formed from film **10** has now been made into a package comprising a series of individual container units **24** joined together at their ends along the transverse tear zones **23**. The quantity of articles **20** placed in each container unit can be measured to comprise a typical single portion for the particular packaged articles. For example, a loaf of bread can be packaged in the tube with two slices in each container unit **24** in the manner illustrated in FIGS. 3–5. Each pair of slices would be arranged in the alternating relationship as shown, that is, with respect to any individual transverse tear zone **23**, the articles in the container units on either side of it both have either their respective bottom portions disposed adjacent the transverse tear zone or both have their top portions arranged adjacent the transverse tear zone. The completed tubular package can then be folded accordian-style as shown in FIG. 6. In this latter condition, the folded tubular package has the bottom of each article properly disposed along the bottom of the package and the folded tube can then be inserted in a protective carton or other type of outer wrapper for storage and display.

When the consumer desires to use the bread from the above package, an individual container unit **24** is separated from the tube along a tear zone **23**. The individual container can then be opened as described below and the packaged slices removed; if, for example, the slices are to be used for sandwiches, the completed sandwiches can be returned to the container unit **24** from which the slices came since the container unit can be reused to form a closed package in the manner described below. The bread slices in the remaining container units are still fully protected because the entire package need not be opened to use only a portion; thus the described package enhances preservation of the unused portions in addition to providing reuseable containers after portions are used.

Sectional views of an individual container unit **24** are illustrated in FIGS. 7–9. The main body of the container unit is formed from the tube of film **10** with the base sheet **11** providing the walls for the container enclosure defined by the folded side edges of the tube and with its top and bottom ends closed by transverse seams **22**. A part of the longitudinal tear zone **12** extends across the container along one side thereof together with a portion of an auxiliary strip **13**. When it is desired to remove the articles **20** from the container, the container body is separated along the tear zone **12** as indicated in FIG. 8 and an access opening is thereby formed through which packaged articles can be withdrawn. If the articles are completely withdrawn from the container, a reuseable container results from the fact that the access opening along the tear zone **12** can be closed by folding over the auxiliary strip **13** to cover the opening. If only part of the articles in the container are initially removed, the container can be reclosed to protect the remaining articles in a similar fashion. If then, for example, the articles **20** comprise a pair of bread slices, a user can remove them from a container for use in making a sandwich and return the completed sandwich to the container and protect it by closing the access opening with the auxiliary strip in the manner described below.

In one form of this invention, adhesive means is used to join the flaps from the auxiliary strip **13** to the walls of a container unit. For this purpose adhesive means **30** comprising a strip (see FIGS. 5 et seq.) of pressure sensitive adhesive, cohesive adhesive or other adhesive coatings which adhere upon the application of contact and/or pressure, can be applied to the strip **13** along its marginal portion **15**. Also, the adhesive means can be applied to an exterior portion of each container unit underneath a flap when the latter is in the condition of FIG. 9, or the adhesive means can be applied to both the flap or strip **13** and an exterior portion of a container unit thereunder. The adhesive means can be applied to the auxiliary strip **13** either before or after it is joined to the base sheet **11** and, the adhesive means could also be applied to the base sheet. When adhesive means are used, a container unit **24** can be closed as shown in FIG. 9 by folding the flap strip **13** to cover the access opening along the tear zone **12** and joining the flap **13** to the exterior of the container unit by means of the adhesive strip **30**. The adhesive means **30** may comprise a series of spaced adhesive units in addition to a continuous strip. Adhesive strips also can be used as the adhesive means for joining the flap to the container body.

However, the adhesive can be omitted from the auxiliary strip or flap **13** and reclosure of an individual container can be obtained by folding the flap formed from a strip portion into the access opening produced by rupture of the base sheet along the tear zone **12**; this would then result in a fold type closure that would also give protection to the contents of the container.

FIGS. 10–13

A package **35** is shown in FIGS. 10 and 11 which is basically similar to the package shown in the preceding drawings except that it is made from a single member film instead of the composite or dual member film **10** of FIG. 1. The package **35** has a plurality of container units or commodity receiving compartments **36** separated from one another along transverse seams **22** and transverse tear zones **23**. Articles **37** are shown packed inside each compartment **36**. As best shown in FIG. 11, the package **35** has a first wall **38** and a second wall **39**, with the wall **38** being longer than the wall **39** so as to have a flap portion **40** extending beyond the marginal edge **41** of the wall **39**. At their opposite ends, the walls **38** and **39** are connected together along a longitudinal fold **42**.

Immediately below the free edge **41** of the wall **39**, a longitudinal heat seal seam **43** joins the walls **38** and **39** together to complete the container enclosure for each compartment **36**. A longitudinal tear zone **12** is disposed just below the seam **43** and extends across the wall **39** in the manner shown so that it extends between the transverse seams **22** between each compartment **36**. As best indicated in the sectional view of FIG. **11**, the flap **40** extending from the wall **38** is long enough so that when it's in its position shown in the dotted line in FIG. 11,

it extends over and covers the tear zone 12 of each compartment. Adhesive means 30, shown herein as a strip of pressure sensitive adhesive, is carried on the flap 40 so that the flap may be adhered to the exterior of the wall 39 when moved in the closed position and thereby cover an access opening formed along a tear zone 12 in an individual container 36. As with the adhesive strip 30 shown in the preceding FIGS. 1–9, the adhesive means can be pressure sensitive adhesive or cohesive adhesive, it may comprise a single strip of adhesive on the flap 40, or a single strip of adhesive on the wall 39 just below the tear zone 12, or a strip of adhesive on both the flap and the wall 39. Also, the adhesive means may be eliminated and the flap 40 for an individual container tucked into an opening formed along a tear zone 12 to provide a fold-type of reclosure.

The operations involved in opening and reusing an individual container 36 from the package 35 are the same as those described above in reference to FIGS. 7–9 for the container units 24.

Two methods for manufacturing the package 35 are shown in FIGS. 12 and 13. In FIG. 12, a tube 45 of suitable film material is used as the starting point for the manufacture of the container and is then severed with the knife means 46 along a slit 47 as shown in FIG. 12*a*, and then opened to form the J-configuration sheet as shown in FIG. 12*b* to provide walls 38 and 39 of unequal lengths but joined together along fold line 42, with flap 40 extending above the upper edge 41 of the wall 39. In FIGS. 13 and 13*a*, a flat sheet 50 is used as the starting point and then folded along a longitudinal fold line 42 to provide the walls 38 and 39 and define the other structural elements as mentioned in connection with FIG. 12*b*. Once the J-folded sheets as shown in FIGS. 12*b* and 13*a* are obtained, they can be handled by several methods to provide the desired finished package 35. In one method, the J-folded sheet is advanced horizontally and a product inserted between the walls 38 and 39 from the direction shown by arrows 51 in FIGS. 12*b* and 13*a*, and then the heat seal 43 (see FIG. 10) is formed to join the two walls together alongside the free edge 41 of the shorter wall; following this operation, transverse seals 22 can be defined to form the separate container units. In another mode, the J-folded sheet can be filled with articles inserted from a vertical direction between the two walls of the folded sheet after the seam 43 is made, with a transverse seam 22 formed to define a boundary of a compartment before it is filled and the next transverse seam 22 formed after the compartment is filled.

With either version, the longitudinal tear zone 12 can be defined in the wall 39 either before or after articles are inserted in the folded sheet.

Another method for arriving at the J-fold sheet as shown in FIGS. 12*b* and 13*a*, but not illustrated in the drawings, is to start with two flat sheets of material, one being shorter than the other and having one longitudinal edge superimposed over that of the longer sheet. These sheets can then be heat sealed together along their superimposed edges to form the closed longitudinal edge of the package in lieu of the fold line 42 mentioned above. Once this condition is obtained, further construction of the finished packages can proceed as previously described.

CONCLUSION

There has thus been described a package having a plurality of individual commodity-receiving compartments separably connected to one another and wherein each compartment has a foldable flap or closure member used to cover or close an access opening formed in each compartment. In this fashion, the individual compartments are useful as reclosable bags and pouches once they have been first opened and their contents entirely or partially withdrawn. In connection with the bread package shown in the previous drawings in which two slices of bread were packaged in each compartment, the reuseable individual compartments are highly useful as sandwich bags. This relieves a housewife, for example, of the need to purchase additional bags or film materials to wrap the finished sandwiches. In essence, the packaging material or cover for a loaf of bread acts as the sandwich bags, thereby providing a potential for a net savings to the user since it is expected that the increased cost of packaging a loaf of bread in the film as described above would be substantially less than the additional price of individual sandwich bags.

Of course, the added benefits and convenience to the user mentioned above in reference to the packaging of bread according to the present invention are available when other types of articles are packaged due to the provision, considered novel with this disclosure, of a wrapper capable of reuse as a closeable individual container.

Two forms of packages according to this invention have been disclosed, and several modes for their manufacture. The packages may be made with known types of converting apparatus and films can be formed into the packages by hand, by machines or by a combination of manual and mechanical operations. A particularly useful feature of the present package is that it enables the formation of reuseable and reclosable pouch-like containers on form-and-fill types of packaging machines in which a packager is supplied with film and simultaneously forms packages from the film and fills them with suitable apparatus.

In the preceding drawings, while the auxiliary flap strips 13 and 40 are shown as having their free edges unattached to a container compartment wall, in the completed packages, the strips may be joined thereto along suitable adhesive means during the formation and filling operations. In this instance, the flap portion of an individual container formed from part of the strip 13 or 40 would then have to be first peeled away from each compartment by the user in order to uncover the tear zone defined therein and thusly form an access opening. While tubular packages having a series of separably connected individual container units have been shown as the primary package according to this invention, it may also be practiced in the form of a single container unit.

This invention has thus been described with respect to several best modes presently contemplated for its practice, however, it is expected that those skilled in the art will be able to make changes in the disclosed modes and devise other embodiments not shown, but still remain within the novel teachings of this invention. It is therefore to be understood that it is intended to cover all changes and modifications of the examples of this invention herein illustrated, as well as embodiments not shown, that do not constitute a departure from the true spirit and scope of this invention.

We claim:

1. A package comprising

a tubular body formed of flexible wrapping material, and a plurality of spaced transverse seams across the tubular body joining superimposed portions thereof together to define a series of individual container units;

a longitudinal tear zone defined across the tubular body along which the wrapping material is severable to provide an access opening for each container unit;

a longitudinal strip of material connected to one side only of the tubular body and extending longitudinally thereof, the strip being wide enough to extend across the longitudinal tear zone when folded thereover to have a marginal free edge portion on the side of the tear zone opposite from its connection to the tubular body;

a transverse tear zone defined across the tubular body between each individual container unit and along which a unit is separable from the rest of the package;

articles packaged within each individual container unit; each container unit when separated from the tubular body having an access opening defined by a portion of the longitudinal tear zone and a cover flap for such access opening defined by a portion of the longitudinal strip.

2. A package according to claim 1, further including adhesive means sealable by contact or pressure for joining said marginal portion of the longitudinal strip to the tubular body so that a cover flap formed from a portion of the strip is sealable to the exterior of a container unit by said adhesive means.

3. A package according to claim 1 wherein:

the package is formed from a flat sheet comprising (1) a base sheet, (2) a longitudinal strip narrower than the base sheet, (3) seam means joining the longitudinal strip to the base sheet, and (4) a longitudinal seam parallel to the seam means and joining edge portions of the base sheet together to form the tubular body.

4. A package according to claim 3, further including adhesive means sealable by contact or pressure for joining said marginal portion of the longitudinal strip to the tubular body so that a cover flap formed from a portion of the strip is sealable to the exterior of a container unit by said adhesive means.

5. A package according to claim 3 wherein

the articles packaged in the tubular body are arranged in alternating fashion with the articles in adjacent compartments separated by a selected transverse tear zone arranged with their bottoms or tops adjacent said selected transverse tear zone.

6. A package according to claim 5 wherein

the package is folded accordian-style with the bottoms of the articles in each container unit arranged along the bottom of the package.

7. A package according to claim 1 wherein

the package is formed from a sheet of flexible material longitudinally folded into a J-shape with a long wall connected along a fold line to a short wall having a free edge, the long wall having a portion extending beyond the free edge of the short wall to define the longitudinal strip, and seam means joining the two walls together alongside the free edge of the short wall to form the tubular body.

8. A package according to claim 7, further including adhesive means sealable by contact or pressure for joining said marginal portion of the longitudinal strip to the tubular body so that a cover flap formed from a portion of the strip is sealable to the exterior of a container unit by said adhesive means.

9. A package according to claim 7 wherein

the articles packaged in the tubular body are arranged in alternating fashion with the articles in adjacent compartments separated by a selected transverse tear zone arranged with their bottoms or tops adjacent said selected transverse tear zone.

10. A package according to claim 9 wherein

the package is folded accordian-style with the bottoms of the articles in each container unit arranged along the bottom of the package.

References Cited

UNITED STATES PATENTS

3,162,539	12/1964	Repko	206—56
3,184,149	5/1965	Repko	229—66
3,224,640	12/1965	Schneider et al.	222—107

MARTHA L. RICE, *Primary Examiner.*