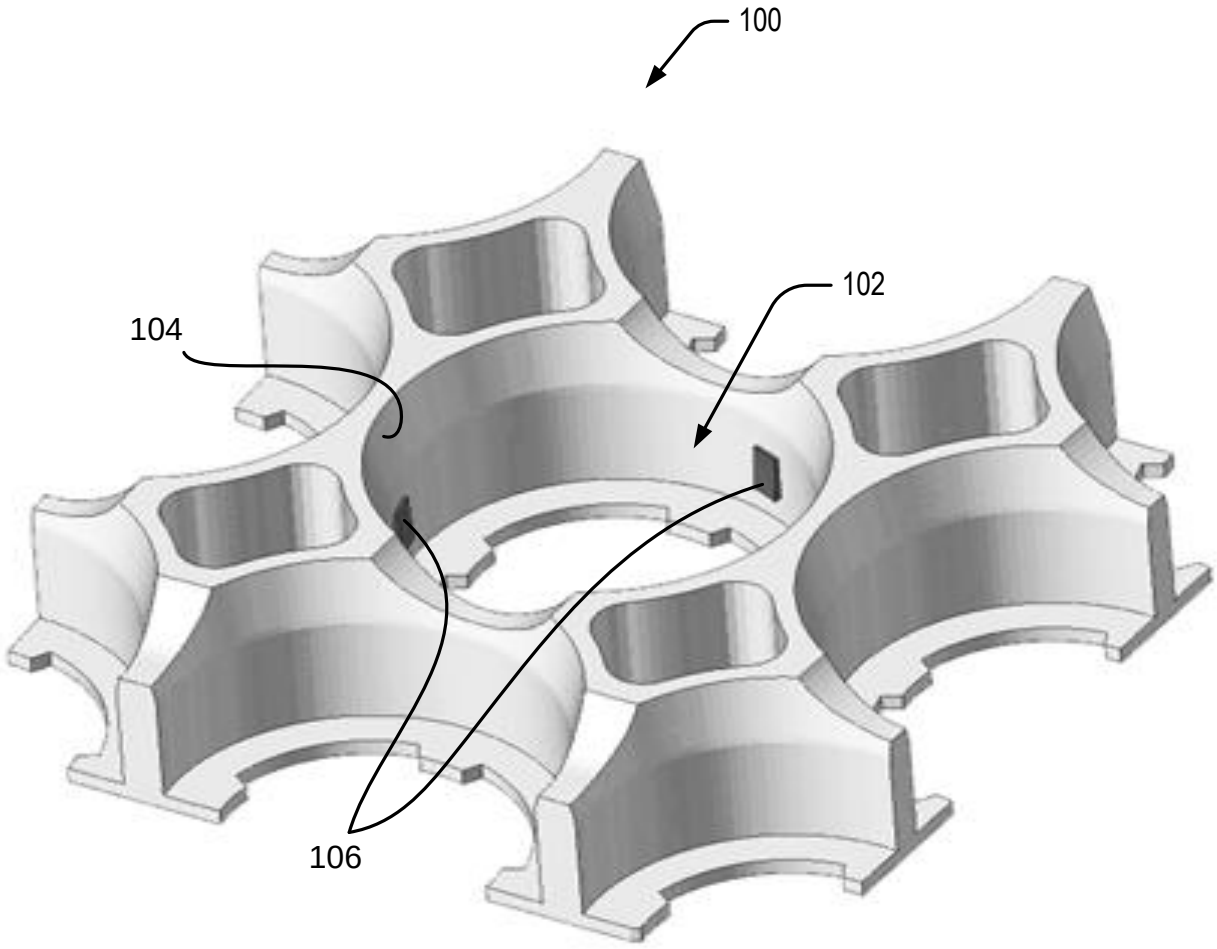

Figure 1

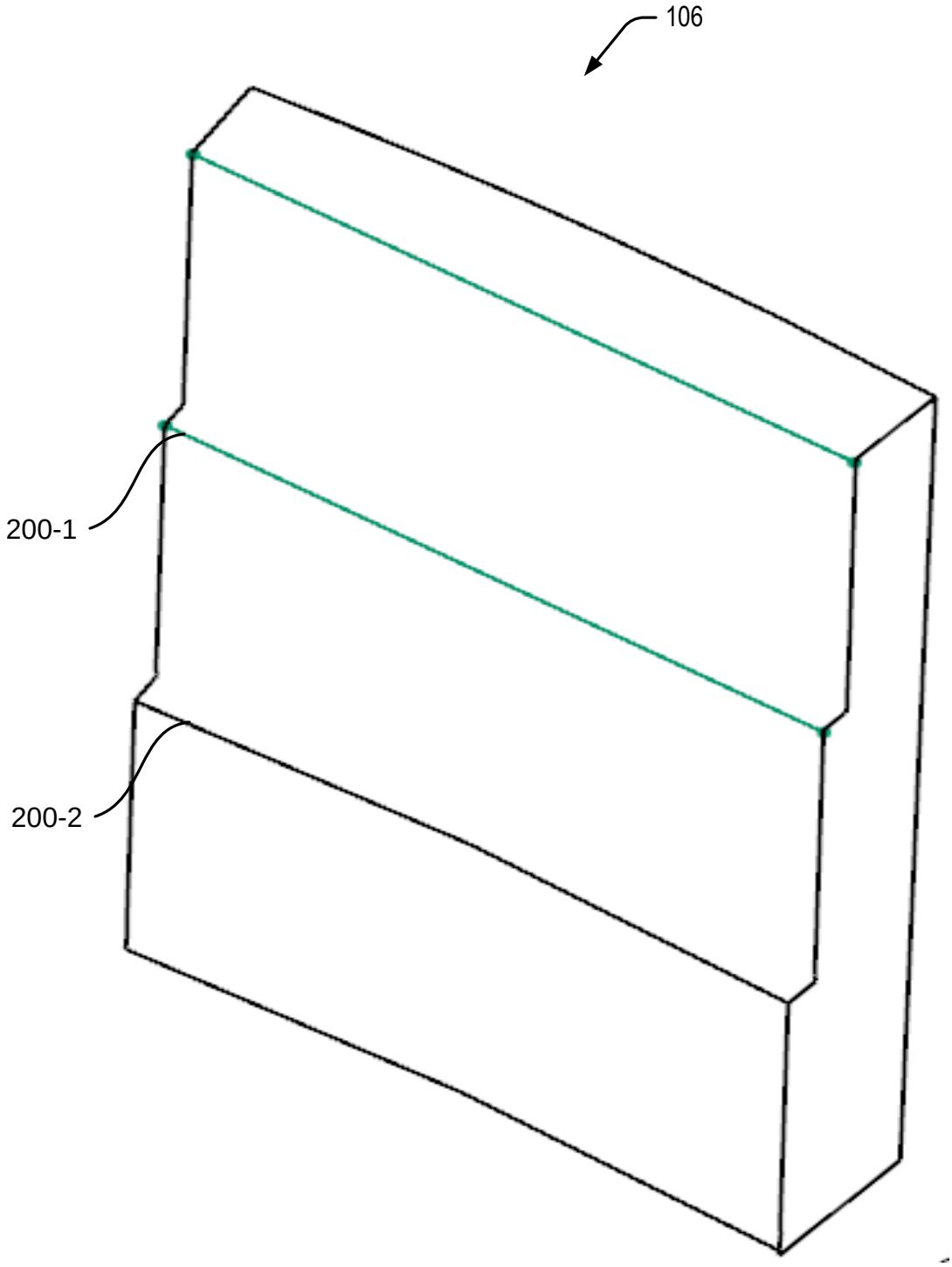

Figure 2

PRASHANT PHILLIPS
IN/PA-1229
Agent for the Applicant

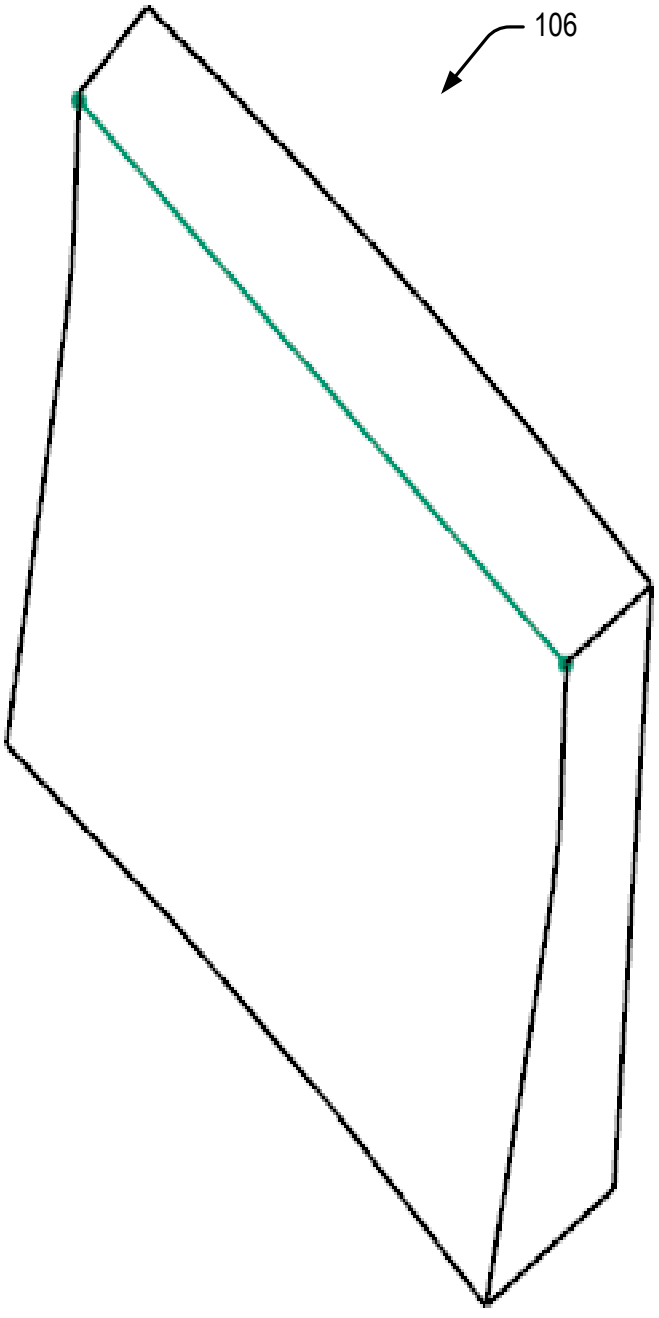

Figure 3

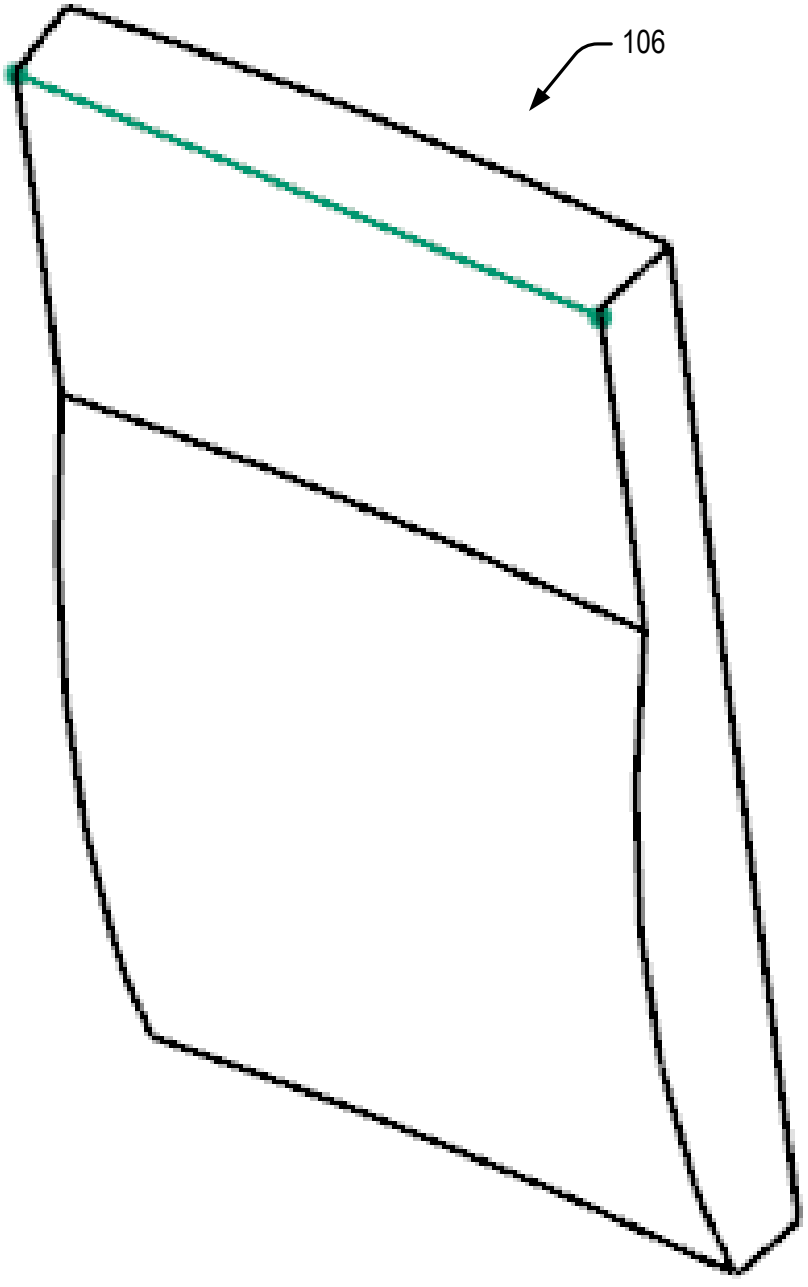

Figure 4

PRASHANT PHILLIPS
IN/PA-1229
Agent for the Applicant

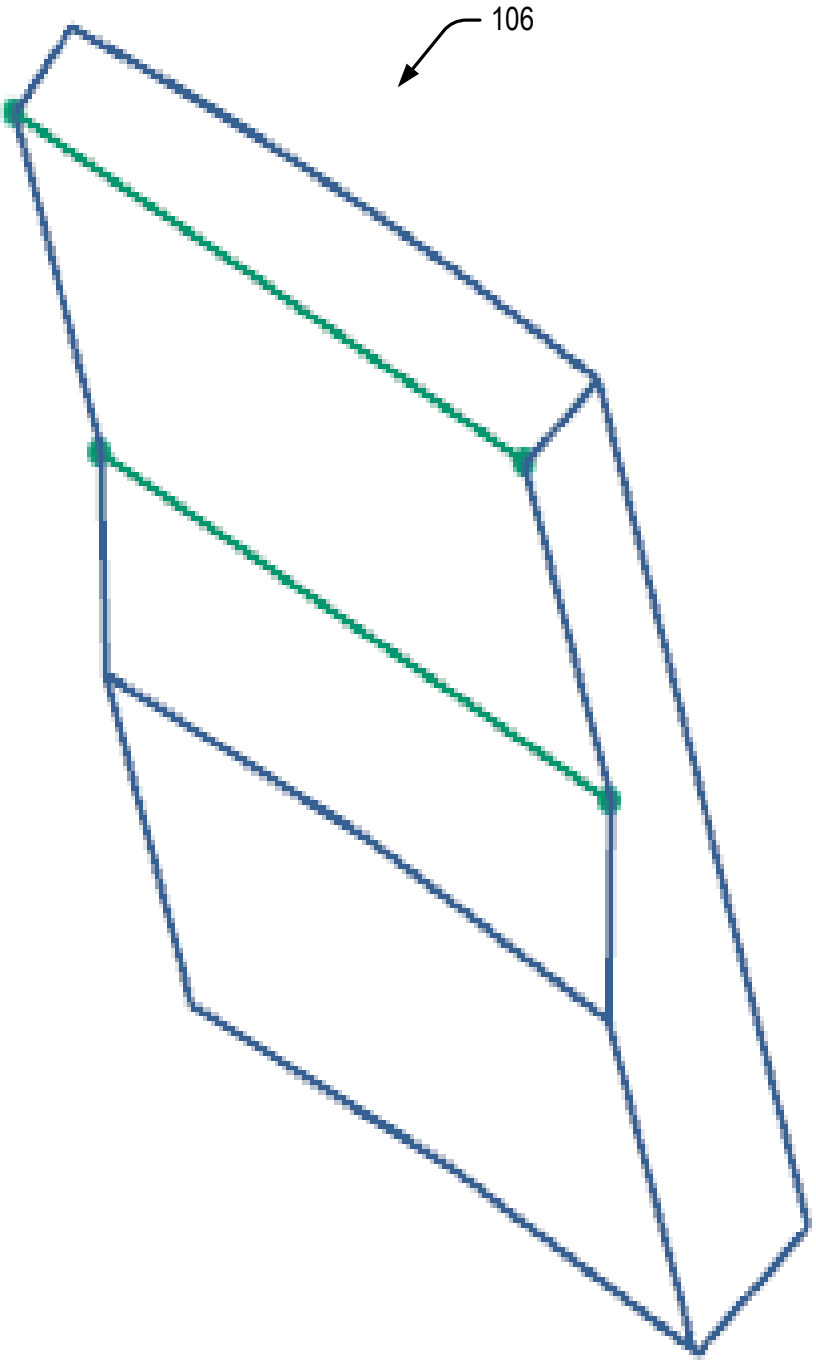

Figure 5

PRASHANT PHILLIPS
IN/PA-1229
Agent for the Applicant

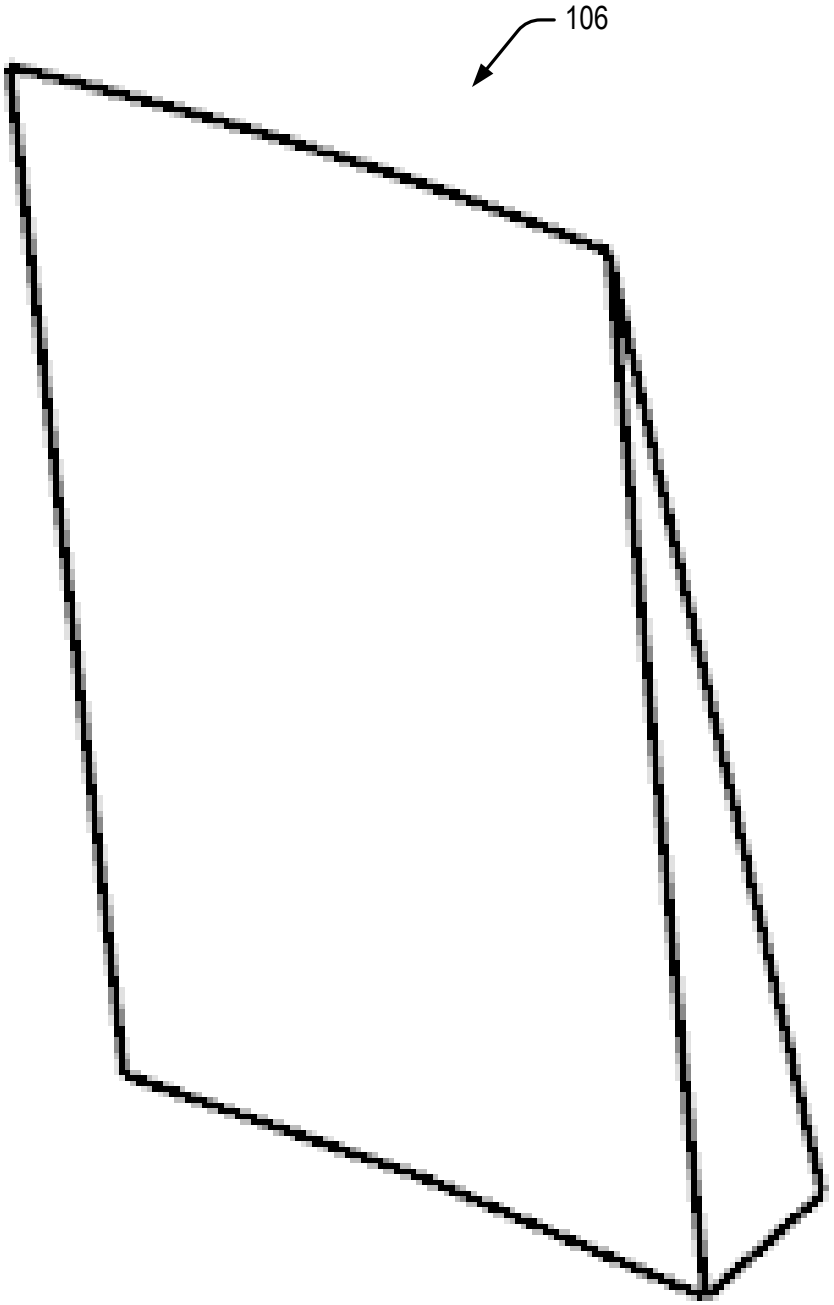

Figure 6

PRASHANT PHILLIPS
IN/PA-1229
Agent for the Applicant

FORM 2

THE PATENTS ACT, 1970
(39 of 1970)
&
THE PATENTS RULES, 2003

COMPLETE SPECIFICATION
(See section 10, rule 13)

***1. Title of the invention*:** CELL GRIP MECHANISM THROUGH CRUSH RIB

2. Applicant(s)

NAME	NATIONALITY	ADDRESS
OLA ELECTRIC MOBILITY PRIVATE LIMITED	Indian	Regent Insignia, #414, 3rd Floor, 4th Block, 17th Main, 100 Feet Road Koramangala Bangalore Karnataka 560034, India

3. Preamble to the description

COMPLETE SPECIFICATION

The following specification particularly describes the invention and the manner in which it is to be performed.

BACKGROUND

[0001] A battery cell holder is designed to securely hold and house a battery cell. At one end of the holder, there may be an opening or socket specifically designed to accommodate the shape and size of the battery cell. To insert a battery cell into the holder, one end of the battery cell is aligned with the opening of the holder. This end is often referred to as the positive or negative terminal of the battery, depending on the design of the holder and the battery cell itself. The opening of the holder is designed to provide a snug fit to prevent the battery cell from moving or rattling inside the holder.

[0002] Battery cell holders have diverse applications, such as, in electric vehicles (EVs). In an EV, multiple battery cells are typically connected together to form a larger battery pack. Each of these individual battery cells needs to be securely held in place within the battery pack to ensure safe and efficient operation. The holders in an EV battery pack not only provide physical support but also play a role in managing thermal performance and electrical connections, helping to optimize the overall performance and safety of the EV's power source.

BRIEF DESCRIPTION OF DRAWINGS

[0003] The detailed description is described with reference to the accompanying figures. In the figures, the left-most digit(s) of a reference number identifies the figure in which the reference number first appears. The same numbers are used throughout the drawings to reference like features and components.

[0004] Figure 1 illustrates a perspective view of a portion of a holder for battery cells, according to an embodiment of the present subject matter.

[0005] Figure 2 depicts a cell gripping unit of the holder with a 'd' step profile, according to an embodiment of the present subject matter.

[0006] Figure 3 depicts the cell gripping unit of the holder with a quadrilateral profile, according to an embodiment of the present subject matter.

[0007] Figure 4 depicts the cell gripping unit of the holder with a small 'b' profile, according to an embodiment of the present subject matter.

[0008] Figure 5 depicts the cell gripping unit of the holder with a 'small d' profile, according to an embodiment of the present subject matter.

[0009] Figure 6 depicts the cell gripping unit of the holder with a triangle profile, according to an embodiment of the present subject matter.

[0010] It may be noted that throughout the drawings, identical reference numbers designate similar, but not necessarily identical, elements. The figures are not necessarily to scale, and the size of some parts may be exaggerated to more clearly illustrate the example shown. Moreover, the drawings provide examples and/or implementations consistent with the description; however, the description is not limited to the examples and/or implementations provided in the drawings.

DETAILED DESCRIPTION

[0011] Examples of the present application relate to a battery cell holder for accommodating a plurality of battery cells.

[0012] Electric vehicles rely on battery packs to power essential vehicle functions, including propulsion and support systems. A battery pack consists of multiple identical batteries or individual battery cells, such as lithium-ion batteries or those based on different chemistries. These battery cells are organized in various configurations, like series, parallel, or a combination, to meet specific voltage, capacity, or power density requirements. In addition to the individual battery cells, the battery pack also includes interconnects that enable electrical conductivity between the individual cells. Battery packs are particularly useful in electric vehicles, EV industries, power distribution, and home appliances where high-production cells or batteries are combined to provide efficient power solutions.

[0013] A battery cell holder is an integral component within the battery pack, purpose-built to house various types of individual battery cells in a specific arrangement. The holder may comprise multiple cylindrical or rectangular

compartments, each comprising an opening designed to snugly fit the shape and size of a battery cell, ensuring a secure fit. By using the battery cell holder, proper electrical contact with the battery cell terminals may be achieved. Battery cell holders are generally made from plastic or metal and come with molded top and bottom compartments to effectively accommodate the battery cells. The holder not only provides support and protection for each battery cell but may also incorporate additional structures that enhance its structural integrity when holding the cells.

[0014] Conventionally, during the assembling process of the battery cells within the holder, for bonding the individual battery cells in the holder's opening, an ultraviolet (UV) glue is used. While this method has been commonly used, the use of UV glue during the process of assembling the battery cells within the holder may present several disadvantages. For instance, the use of UV glue fails to optimize assembly force and does not address issues related to interference between the battery cell and the holder. This may lead to inconsistencies in the bonding process, thereby compromising the structural integrity of the assembly.

[0015] Moreover, the use of the UV glue increases component expenses, as it necessitates the procurement of additional materials and equipment for the bonding process. This, in turn, may contribute to higher inventory costs, as maintaining a stockpile of the UV glue and related supplies becomes imperative. Further, the application of the UV glue may affect production efficiency. The UV glue is to be applied, cured, and inspected, introducing additional steps into the assembly process, which may lead to longer production times and potential bottlenecks. Additionally, with use of the UV glue, there may be an issue of interference between the battery cell and the holder. Uneven application of the UV glue may create unintended gaps or spaces, impacting the secure fit of the battery cell within the holder, thereby affecting the overall performance and safety of the battery pack.

[0016] Accordingly, there is a requirement for a battery cell holder that is designed to overcome challenges related to increased costs, production

efficiency, assembly force control, and potential interference issues for a more efficient and reliable battery assembly process.

[0017] Aspects in relation to a holder configured to accommodate battery cells of a battery pack are described. In an example implementation of the present subject matter, the holder comprises a plurality of hollow portions. Each of the plurality of hollow portions is defined by a wall to accommodate an individual battery cell. The holder further comprises a plurality of cell gripping units formed along an inner portion of the wall of the hollow portion. Each of the plurality of cell gripping units has progressively increasing thickness from top to bottom. Further, each of the plurality of cell gripping units is configured to retract within an opening provided in the wall to accommodate the battery cell when inserted into the holder.

[0018] Thus, integrating the cell gripping units with the holder eliminates the need for UV glue traditionally used for bonding the battery cells within the holder's openings. The cell gripping units, with their progressively increasing thickness from top to bottom, provide the necessary structural grip force on individual battery cells of different sizes, thereby ensuring optimization of the assembly force and mitigation of the interference issues between an individual battery cell and the holder. Moreover, the absence of UV glue streamlines the production process and reduces production costs and time for the battery cell holder.

[0019] While embodiments of the present invention have been described in the context of an electrical device, it will be understood that the same is only to provide an example of implementation of the present invention and is not to be construed as a limitation. The teachings of the present invention may be applied to an electronic instrument, an electric vehicle, an automobile, an electric power system, or the like, without deviating from the scope of the present subject matter.

[0020] The above and other features, aspects, and advantages of the subject matter will be better explained with regard to the following description and accompanying figures. It should be noted that the description and figures

merely illustrate the principles of the present subject matter along with examples described herein and should not be construed as a limitation to the present subject matter. It is thus understood that various arrangements may be devised that, although not explicitly described or shown herein, embody the principles of the present disclosure. Moreover, all statements herein reciting principles, aspects, and examples thereof, are intended to encompass equivalents thereof. Further, for the sake of simplicity, and without limitation, the same numbers are used throughout the drawings to reference like features and components.

[0021] Figure 1 illustrates a perspective view of a portion of a holder 100 for battery cells (not illustrated) of a battery pack, according to an example embodiment of the present subject matter. The holder 100 is to vertically receive one end of the battery cells. In an example, the holder 100 is a bottom holder of a battery cell housing assembly that is to be coupled with a top holder (not illustrated) to complete the battery cell housing assembly. The holder 100 may be made of plastic, metal, or any other material that may be fashioned for said purpose, for an example.

[0022] The holder 100 comprises a plurality of hollow portions, such as a hollow portion 102 as shown in Figure 1. Each of the hollow portions 102 is defined by a wall 104 to fit an individual battery cell. Although the wall 104 of the holder 100 in the present example has been shown as circular, in an alternative embodiment, the wall 104 of the holder 100 may take on any other shape depending upon design specifications of the individual battery cell to be accommodated in the holder 100. For instance, in an electric vehicle, the wall 104 of the holder 100 may include a hexagonal shape, comprising six side sides to accommodate a hexagonal-shaped battery cell or even a round or oval battery cell.

[0023] As shown in Figure 1, the holder 100 further comprises a plurality of cell gripping units 106 protruding radially inward on an inner portion of the wall 104 of the hollow portion 102. Although in the present example, the cell gripping units 106 have been shown as being assembled in the bottom holder

100, in an alternative embodiment, the cell gripping units 106 may be provided in the top holder, or both the top holder and the bottom holder 100 simultaneously.

[0024] In an example, each of the plurality of cell gripping units 106 is configured to retract, accommodating the battery cell upon insertion into the holder 100. To elaborate, when a battery cell is inserted into the hollow portion 102 of the holder 100, a sufficient assembly force may be required to overcome an interference fit caused by contact between an outer surface of the battery cell and the inner portion of the wall 104. The cell gripping units 106 retracts due to the interference fit, thereby ensuring a snug and secure fit of the battery cell inside the holder 100.

[0025] The cell gripping units 106 has a progressively increasing thickness from top to bottom and is retractable which allows the cell gripping units 106 to adjust its shape and grip pressure based on the specific dimensions of the battery cell being inserted into the holder 100. For instance, if a larger battery cell, for instance, a battery cell that is dimensioned substantially the same as the hollow portion 102, is inserted, the cell gripping units 106 may compress upon the exertion of the assembly force to create sufficient space. Likewise, upon insertion of a smaller battery cell, the cell gripping units 106 gets compressed in a secondary area, thereby arresting the movement of the battery cell.

[0026] In an example, as the battery cell is mounted on the holder 100, the cell gripping units 106 may retract inwardly within the wall 104 or extend outwardly as needed due to the interference fit. To allow the inward retraction of the cell gripping units 106, the wall 104 may include an opening, such as recesses or grooves, for example. These openings provided corresponding to each cell gripping units 106 may facilitate the inward retraction of the cell gripping units 106 upon insertion of the battery cell, thereby allowing the cell gripping units 106 to slide and adapt to different battery cell sizes, ensuring a secure and space-efficient fit.

[0027] Thus, regardless of the size of the battery cell, the cell gripping units 106 of the present subject matter provides the necessary grip force, securely holding the battery cell in the holder 100. The use of the cell gripping units 106 in the holder 100 not only simplifies the assembly process of the battery pack but also ensures a reliable and stable connection for various battery cell sizes, making the holder 100 of the present subject matter suitable for a range of applications.

[0028] In an example, the cell gripping units 106 of the holder 100 may be placed at 120-degree intervals around the inner portion wall of the holder, thereby ensuring consistent and uniform gripping. Alternatively, the cell gripping units 106 of the holder 100 may be placed at 90-degree intervals around. The placement of the cell gripping units 106 of the holder 100 may be dependent on insertion force and other parameters.

[0029] Although the present example has been described with three cell gripping units 106, in alternative embodiments, the holder 100 may feature more than three cell gripping units 106 based on dimension of the battery cells, offering further customization options. In an example, the cell gripping units 106 may be crush ribs that are deformable during the insertion of the battery cell in the holder 100.

[0030] Figure 2 illustrates the cell gripping unit of the holder with a 'd' step profile, according to an embodiment of the present subject matter.

[0031] As shown in Figure 2, the cell gripping unit 106 with the 'd' step profile may include a series of vertically descending protrusions 200-1, 200-2. The stepped profile of the cell gripping unit 106, as shown in Figure 2, ensures a secure grip on the battery cell housed within the holder 100. When the battery cell is inserted, the protrusions 200-1, 200-2 of the cell gripping unit 106 engage with the outer surface of the battery cell, creating multiple contact points that distribute the grip force evenly. This distributed grip force prevents any slippage or movement of the battery cell within the holder 100, ensuring a stable and secure fit.

[0032] Further, each protrusion 200-1, 200-2 of the stepped profile may incorporate a curved design. As shown in Figure 2, the curved design is integrated at transition points between each protrusion 200-1, 200-2 within the stepped profile. This curvature serves a dual purpose. Firstly, it allows for the easy insertion of the battery cells with varying sizes. The curved profile provides a smoother transition for the battery cell as it slides into the holder 100, reducing the risk of friction or resistance during the insertion process. Secondly, the curved shape also contributes to the overall grip by conforming to the contour of the battery cell's outer surface, enhancing the holding capability of the cell gripping unit 106. This combination of stepped and curved profiles of the cell gripping unit 106 ensures that regardless of the battery cell's size, the cell gripping unit 106 produces the necessary grip for a secure and reliable hold within the holder 100.

[0033] Figure 3 illustrates another view of the cell gripping unit 106 with a quadrilateral profile, according to another embodiment of the present subject matter. As shown in Figure 3, the quadrilateral profile of the cell gripping unit 106 may comprise four distinct sides forming a shape similar to a rectangle or square. Structurally, each side of this gripping unit 106 may provide both functional and practical benefits. One of the structural advantages of the quadrilateral cell gripping unit 106 is its stability and uniformity of grip, which takes into account the tolerance of the battery cell. The four sides of the quadrilateral cell gripping unit 106 create a balanced and consistent grip around the outer surface of the battery cell, accommodating slight variations in cell dimensions due to manufacturing tolerances. This balanced grip minimizes the chances of uneven pressure or slippage, ensuring that the battery cell remains securely held within the holder 100, even when cell dimensions vary slightly.

[0034] In an example, the quadrilateral profile of the cell gripping unit 106 may include rounded corners at each junction, creating smooth transitions between the sides. These rounded corners may serve to facilitate the insertion of the battery cells of varying sizes, including those with slight tolerances.

When the battery cell is inserted in the holder 100, the battery cell encounters minimal resistance at these curved corners, streamlining the insertion process. Thus, the quadrilateral profile of the cell gripping unit 106 makes the cell gripping unit 106 stable and reliable for securely holding the battery cells within the holder 100, regardless of minor variations in the battery cell dimensions during manufacturing.

[0035] Figure 4 illustrates yet another view of the cell gripping unit 106 with a small 'b' profile, according to another embodiment of the present subject matter. As shown in Figure 4, the small 'b' profile of the cell gripping unit 106 may be defined by a thinner upper section of cell the cell gripping unit 106 that gradually widens as it descends to a specific point and then tapers off, eventually forming the 'b' shape.

[0036] The small 'b' profile of cell gripping unit 106 allows the cell gripping unit 106 to adapt to various battery cell sizes effectively. The initial increase in thickness from the top to the specific point ensures that the cell gripping unit 106 exerts an appropriate amount of pressure on the battery cell based on the dimensions of the battery cell. The subsequent tapering off of the thickness at the bottom allows for a secure yet adjustable grip, accommodating variations in the battery cell size or shape.

[0037] Moreover, the 'b' shape profile of the cell gripping unit 106 may be advantageous for the insertion and removal of the battery cells. The thinner upper section eases the initial insertion process by minimizing resistance, while the tapered section enhances stability during retention, thereby optimizing both ease of use and secure gripping.

[0038] Figure 5 illustrates yet another view of the cell gripping unit 106 with a small 'd' profile, according to another embodiment of the present subject matter. The small 'd' profile is achieved by tapering on the top while maintaining a constant thickness of the protrusion towards the bottom. The tapering on the top ensures that the cell gripping unit 106 exerts sufficient pressure on the battery cell based on the dimensions of the battery cell. The constant thickness

of the protrusion towards the bottom provides a secure yet adjustable grip, accommodating variations in the battery cell size or shape.

[0039] The 'd' shape of the profile is also advantageous for ease of use. The thinner tapered section at the top eases the initial insertion process by minimizing resistance during the battery cell insertion. This design combines adaptability and ease of use, making it suitable for a wide range of battery cell types and sizes.

[0040] Figure 6 illustrates yet another view of the cell gripping unit 106 with a triangle profile, according to another embodiment of the present subject matter. As shown in Figure 6, the triangle profile of the cell gripping unit 106 features three sides that converge to form a triangular shape.

[0041] The triangle profile of the cell gripping unit 106 may include notches or indentations positioned along each side of the triangle. These notches serve to enhance grip by creating additional contact points with the battery cell's outer surface. As the battery cell is inserted, these notches engage with the battery cell, ensuring a secure hold. The notched design also allows for flexibility in accommodating variations in the battery cell dimensions.

[0042] Further, the retractable feature of the triangular shape of the cell gripping unit 106 allows it to adapt and retract inward when larger battery cells are inserted or extend radially outward when smaller battery cells are used. This adaptability allows for securely holding battery cells of various sizes and shapes.

[0043] Thus, the holder featuring retractable cell gripping units enhances the functionality and versatility of the holder. Firstly, the retractable cell gripping units accommodate manufacturing tolerances, ensuring that battery cells of varying sizes fit securely and snugly within the holder. This adaptability eliminates the need for stringent size constraints, making the holder compatible with a wide range of battery cell dimensions. Secondly, the design of the cell gripping units optimizes assembly force and addresses the challenge of interference fit efficiently. The retractable nature of the cell gripping units mitigates the assembly force required to overcome the

interference fit, streamlining the assembly process. This not only simplifies the task but also minimizes the risk of damage to battery cells during installation. Additionally, the retractable cell gripping units provide uniform grip pressure on the battery cells. This uniformity is achieved without the need for adhesives or UV glue, ensuring that each cell is securely held in place. Thus, the holder with retractable cell gripping units offers adaptability, ease of assembly, and consistent gripping performance.

[0044] Although the subject matter has been described in considerable detail with reference to certain examples and implementations thereof, other implementations are possible. As such, the present disclosure should not be considered limited to the description of the preferred examples and implementations contained therein.

I/We Claim:

1. A holder for battery cells, comprising:

a plurality of hollow portions each defined by a wall to accommodate an individual battery cell; and

a plurality of cell gripping units formed along an inner portion of the wall of the hollow portion, each of the plurality of cell gripping units having progressively increasing thickness from top to bottom,

wherein each of the plurality of cell gripping units is configured to retract to accommodate the battery cell when inserted into the holder.

2. The holder as claimed in claim 1, wherein each of the plurality of cell gripping units is positioned at intervals of at least one of 90 and 120 degrees from each other on the inner wall of the hollow portion.

3. The holder as claimed in claim 1, wherein each of said plurality of cell gripping units is to retract in response to an interference fit between the battery cell and the inner portion of the wall.

4. The holder as claimed in claim 1, wherein each of the plurality of cell gripping units is to retract within an opening in the wall.

5. The holder as claimed in claim 1, wherein the plurality of cell gripping units is positioned in at least one of a top holder, a bottom holder, or both simultaneously.

6. The holder as claimed in 1, wherein each of the cell gripping units comprises a series of vertically descending protrusions.

7. A holder as claimed in claim 1, wherein each of the cell gripping units has a quadrilateral profile defined by four distinct sides.

8. The holder as claimed in claim 1, wherein each of the cell gripping units has a 'b' profile defined by an initial increase in thickness from the top followed by a gradual tapering towards the bottom.

9. The holder as claimed in claim 1, wherein each of the cell gripping units has a 'd' profile defined by tapering on the top and a constant thickness along the bottom.

10. The holder as claimed in claim 1, wherein each of the cell gripping units has a triangular profile defined by three sides converging to form the triangular profile.

Date **5 October 2023**

PRASHANT PHILLIPS
IN/PA-1229
Agent for the Applicant

To,
The Controller of Patents
The Patent Office at **Chennai**

ABSTRACT

CELL GRIP MECHANISM THROUGH CRUSH RIB

The present subject matter relates to a holder for battery cells. The holder comprises a plurality of hollow portions each defined by a wall to accommodate an individual battery cell. The holder further comprises a plurality of cell gripping units formed along an inner portion of the wall of the hollow portion, each of the plurality of cell gripping units having progressively increasing thickness from top to bottom. Each of the plurality of cell gripping units is configured to retract to accommodate the battery cell when inserted into the holder.

<<To be published with FIG. 1>>