(Model.)

A. J. PIERCE.

OIL BURNER.

No. 398,536. Patented Feb. 26, 1889.

Fig. 1.

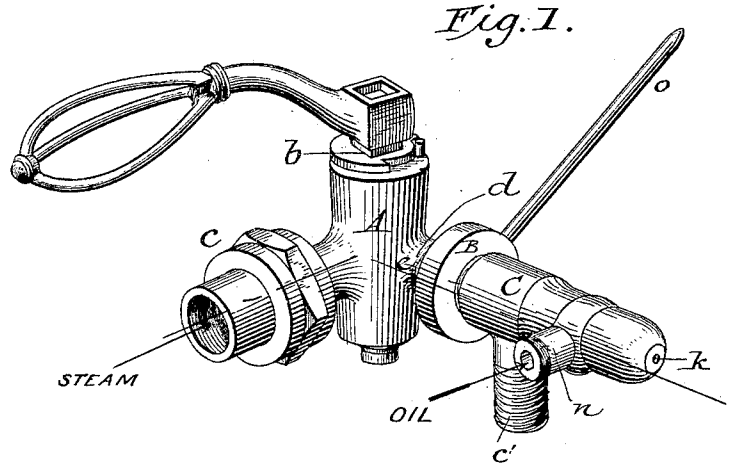

Fig. 2.

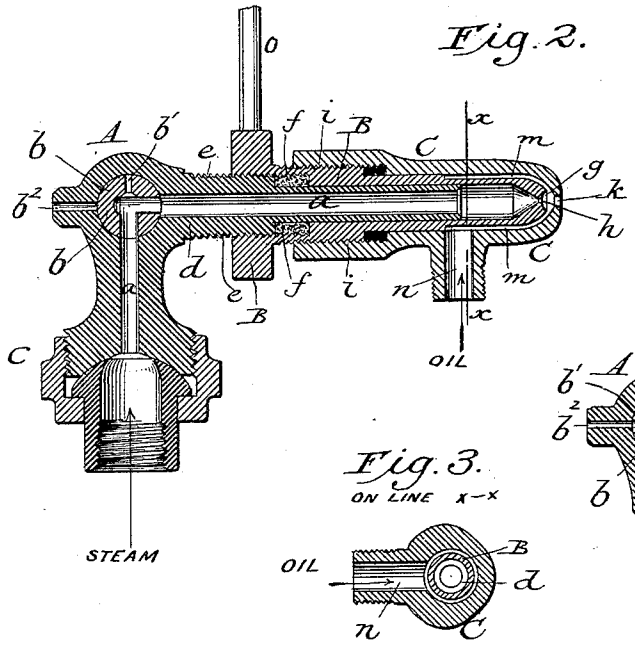

Fig. 4.

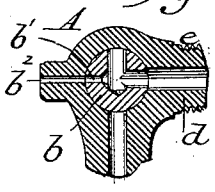

Fig. 3.
ON LINE x–x

Attest:
Sidney A. Hollingsworth
H. R. Kennedy.

Inventor:
A. J. Pierce
By his atty
Phil T. Dodge.

N. PETERS. Photo-Lithographer, Washington, D. C.

UNITED STATES PATENT OFFICE.

ANDREW J. PIERCE, OF RACINE, WISCONSIN.

OIL-BURNER.

SPECIFICATION forming part of Letters Patent No. 398,536, dated February 26, 1889.

Application filed February 28, 1888. Serial No. 265,618. (Model.)

To all whom it may concern:

Be it known that I, ANDREW J. PIERCE, of Racine, in the county of Racine and State of Wisconsin, have invented certain Improvements in Oil-Burners, of which the following is a specification.

My invention relates to that class of devices in which the oil is shattered and atomized and driven into a retort or combustion-chamber by the direct action of a jet of steam; and it consists in various details of construction, hereinafter set forth, having in view the simplification and cheapening of the burner, an increase in its capacity for delivery, and convenience in the removal of obstructions from its interior.

In the accompanying drawings, Figure 1 is a perspective view of my complete burner. Fig. 2 is a horizontal axial section of the same. Fig. 3 is a cross-section on the line *x x*. Fig. 4 is an axial section through the steam-controlling cock, adjusted in position to permit the introduction of a cleaning-tool. Fig. 5 is an outline elevation showing the manner in which the burner is commonly connected with the boiler.

Referring to the drawings, A represents a stationary steam stop-cock having an angular form, with a bore or passage, *a*, therethrough, and a rotary plug, *b*, to control said passage. The bore of the cock emerges at one end through a neck having a coupling, *c*, or equivalent means for the attachment of the steam-supply pipe. At the opposite end the bore extends centrally through the tubular neck or extension *d*, which is provided with the external screw-thread, *e*, at its inner end, and reduced and made of cylindrical form at the outer end. Over and around the steam-conducting neck *d* is applied a tubular valve-spindle, B, having its rear end secured upon the thread *e*, and preferably, but not necessarily, recessed to receive the internal packing, *f*. At its forward end the valve-spindle B is made of a conical or tapering form externally, and provided with the central cavity or depression, *g*, from which a small opening, *h*, extends axially into the interior, forming the sole outlet for the steam.

The valve-spindle B is reduced in diameter externally at its forward end, and provided with an external screw-thread, *i*, and is inclosed by a stationary tubular shell or cap, C, the rear end of which is screwed closely upon the thread *i*. At its forward end the cap is provided with the single discharge-orifice *k*, in line with and of somewhat greater diameter than the valve-orifice *h*. Internally the cap is enlarged or bored out at its forward end in such manner as to leave an annular space, *m*, therein around the valve-spindle from the delivery-orifice rearward a suitable distance. A tubular neck, *n*, on the side of the cap, adapted for connection with an oil-supply pipe, delivers the oil into the rear end of the annular space, through which the oil flows in a forward direction around the valve and the steam-jet to the point of exit.

The rear end of the valve-spindle B is exposed, as shown, and provided with an arm, *o*, or otherwise formed, so that it may be screwed readily forward and backward in relation to the other parts.

It will be perceived that the oil is compelled to flow inward from the annular space *m* around and in front of the end of the valve-spindle to reach the outlet *k*, and that by turning the valve-spindle forward the oil-discharge may be reduced and the flow of oil limited or varied at will without affecting the delivery of steam which is controlled by the plug *b*. When the end of the valve-spindle abuts against the interior of the cap, the oil-passage is entirely closed.

When the device is in action, the steam-jet is directed from the orifice *h* across the intervening space and outward through the orifice *k* into the combustion-chamber or retort. The jet inducing a strong suction causes the oil to flow into the annular space *m*, and thence forward and inward to the center, where it encircles and encounters the steam-jet, by which it is finely atomized, partly vaporized, and projected in the form of a fine mist a long distance beyond the burner.

As the valve is highly heated by the passage of steam therethrough, the oil in contact with its outer surface is raised to a high temperature before reaching the place of atomization, and this is found to be highly advantageous. A thorough practical experience has shown that the cavity *g*, affording an enlarged space or chamber at the point where the steam and oil meet, is of great advantage,

in that the burner provided therewith will atomize and deliver a much greater amount of oil than would otherwise be the case.

In order to permit the speedy and convenient removal of foreign matters which may find their way with the oil into the interior of the burner, I provide the plug of the steam-cock with a hole, b', and provide the body of the cock with a hole, b^2, the two being arranged in such position that when the cock is turned, as shown in Fig. 4, to shut off the flow of steam, the holes b' and b^2 will register with each other and with the bore of the valve-spindle, so that a wire or other instrument may be inserted freely through the burner from end to end.

While I prefer to construct the cock of the angular form shown in the drawings—that is to say, with its inlet and outlet necks at right angles to each other—it is manifest that it may be constructed in any other suitable form.

In practice I commonly connect the cock A firmly to a fixed pipe and attach the cap C by means of a lug, c', on its under side to a base-plate or other fixed support, so that the parts A and C are held in fixed relations to each other.

I am aware that atomizing-burners have been variously constructed with nozzles directing a jet of steam through and beyond a nozzle into which the oil is admitted; and I am aware that in this class of devices the steam-nozzle has been in some instances provided with a cup or depression at the delivery end, this end being, however, arranged at a great distance from the delivery-orifice of the outer nozzle in one end of a large steam-chamber.

It is to be particularly noted as a peculiarity of my burner that the central steam-nozzle, B, has its cupped end G arranged when in action in very close proximity to the inside of the cap or oil-conductor C. Under my arrangement of parts the oil is compelled to flow in a very thin annular film inward to and around the steam-jet immediately adjacent to the point of emission. The oil and steam are in my device first brought in contact with each other at the point of discharge, and in a very small space or chamber existing between the cupped or recessed end of the tube and the inside of the cap C. I find that in practice a great advantage attends this arrangement since the steam-jet is practically solid or unbroken at the point where it is brought in contact with the oil. The steam issuing through the orifice h passes almost instantly and with slight expansion through the outer orifice, k, flowing in the meantime through the thin film or stratum of oil.

In practice I find that by adjusting the forward end of the steam-tube, as shown, so that it almost touches the cap C at the forward end, and by using in connection with the tube thus adjusted the cavity g, I am enabled to secure a thorough admixture of the steam and oil, and to deliver the same in quantities much greater than would otherwise be possible.

Having thus described my invention, what I claim is—

1. In an atomizing oil-burner, the central steam-conducting pipe having the end cavity, g, and the central delivery-orifice, h, in combination with the inclosing-cap C, having the oil-inlet n, and the contracted front end with the central delivery-orifice, k, of less diameter than cavity g, said cap adjusted with its contracted end in close proximity to the end of the steam-pipe, whereby the oil is directed inward in a thin annular film to the central unexpanded steam-jet.

2. The external cap having an oil-inlet and the contracted end with the discharge-orifice k at its extremity, in combination with the internal steam-pipe terminating in close proximity to the end of the cap and provided with the central orifice, h, and with an end cavity, g.

3. The cock having the cylindrical pipe a and external thread, e, the cap C, provided with the inlet and outlet orifices and with the internal screw-threads, in combination with the intermediate pipe, B, fitted and threaded closely within the cap C, and also fitted and threaded closely upon the outside of the pipe a, whereby said pipe B is adapted to maintain the proper relation of the other parts and also to serve as a valve for regulating the oil-delivery.

4. In an atomizing-burner, the central steam-pipe and the external cap having its delivery-orifice coincident with the bore of the steam-pipe, in combination with the cock comprising the body, with the lateral steam-inlet and the direct opening b^2, and the rotary plug having the angular steam-passage therethrough, and the opening b', forming a continuation of said passage, whereby the steam may be directed through the burner or the steam shut off, and an opening established through the burner from end to end for the passage of a cleansing-instrument therethrough.

In testimony whereof I hereunto set my hand, this 23d day of February, 1888, in the presence of two attesting witnesses.

ANDREW J. PIERCE.

Witnesses:
J. E. DODGE,
M. J. EAGER.