Nov. 18, 1941. T. BROOKS 2,262,917

AUTOMATIC COLLISION SWITCH

Filed May 4, 1940 4 Sheets-Sheet 1

Fig. 1.

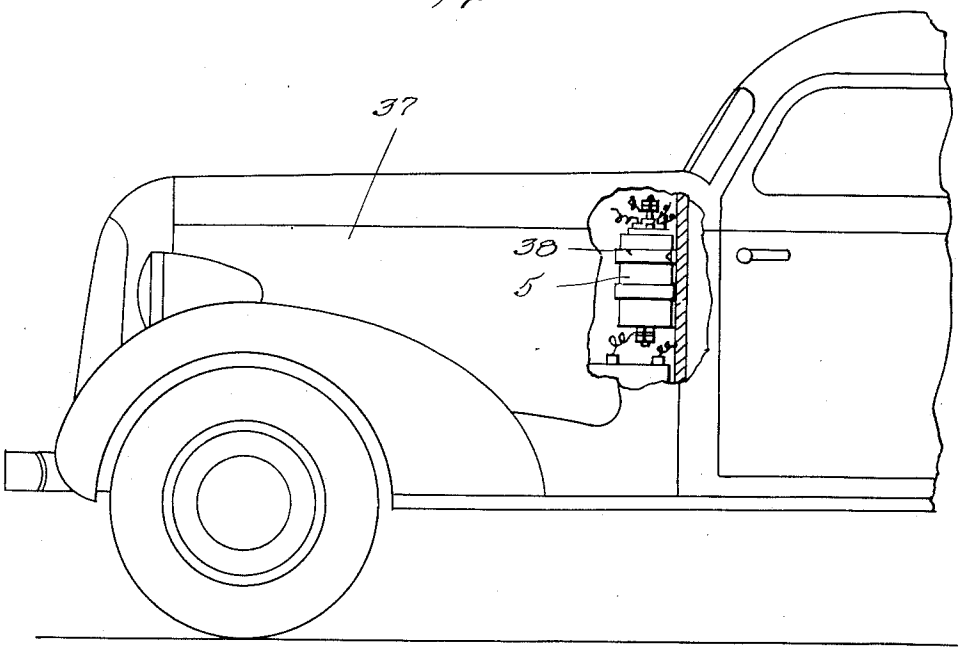

Fig. 2.

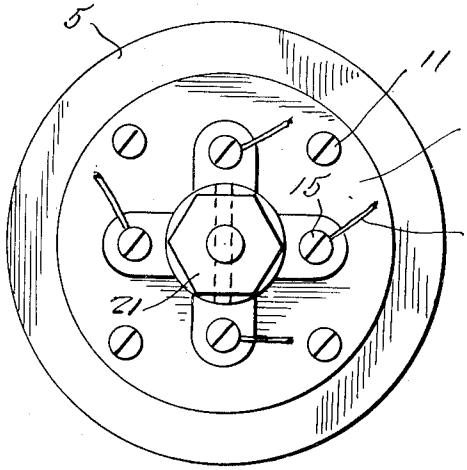

Fig. 7.

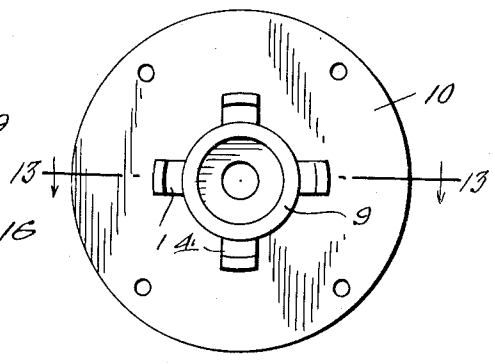

Inventor

Thomas Brooks

By Clarence A. O'Brien and Hyman Berman

Attorneys

Nov. 18, 1941. T. BROOKS 2,262,917

AUTOMATIC COLLISION SWITCH

Filed May 4, 1940 4 Sheets-Sheet 2

Fig. 3.

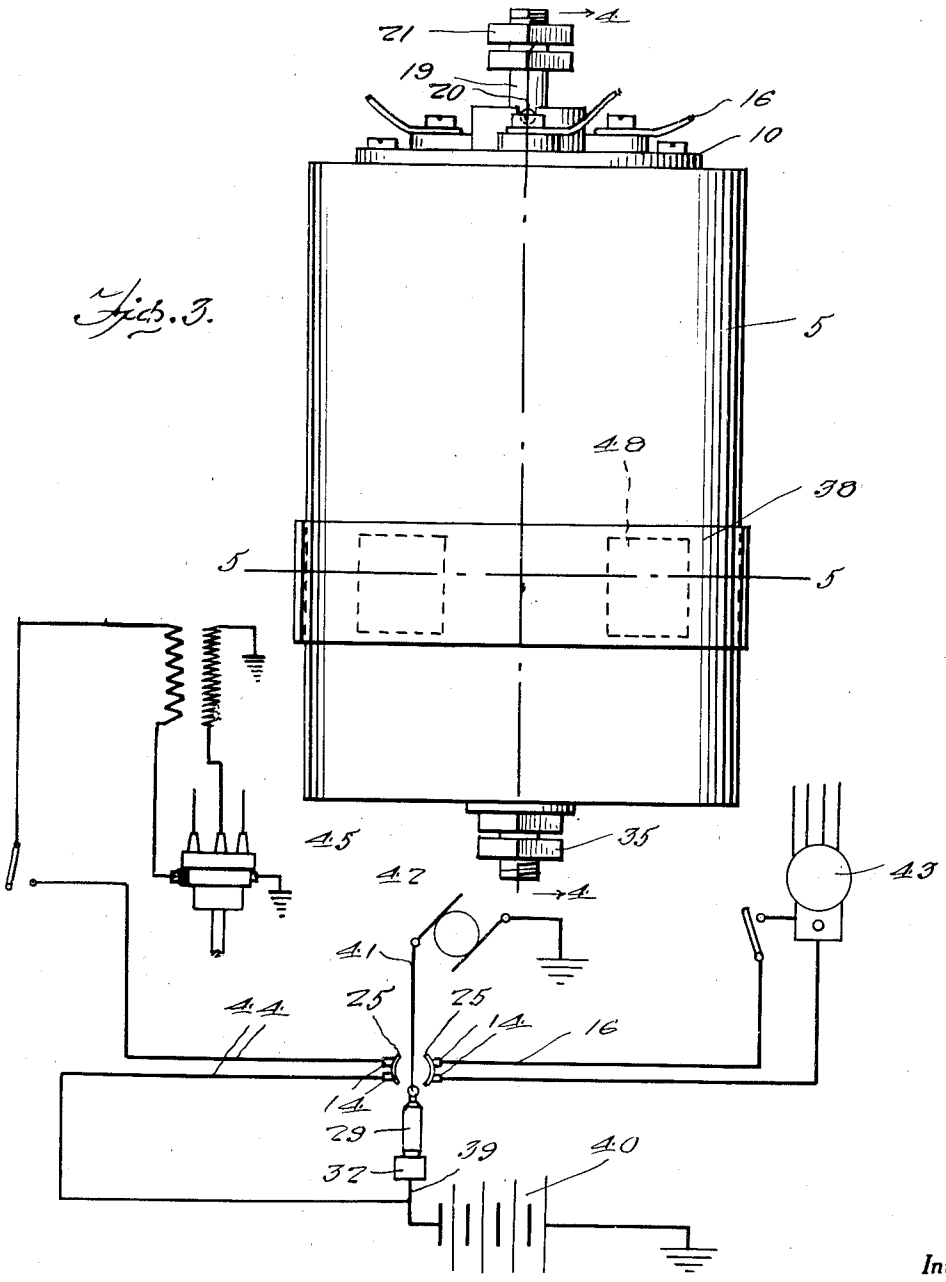

Fig. 12.

Inventor

Thomas Brooks

By Clarence O'Brien and Hyman Berman

Attorneys

Nov. 18, 1941. T. BROOKS 2,262,917

AUTOMATIC COLLISION SWITCH

Filed May 4, 1940 4 Sheets-Sheet 3

Fig. 4.

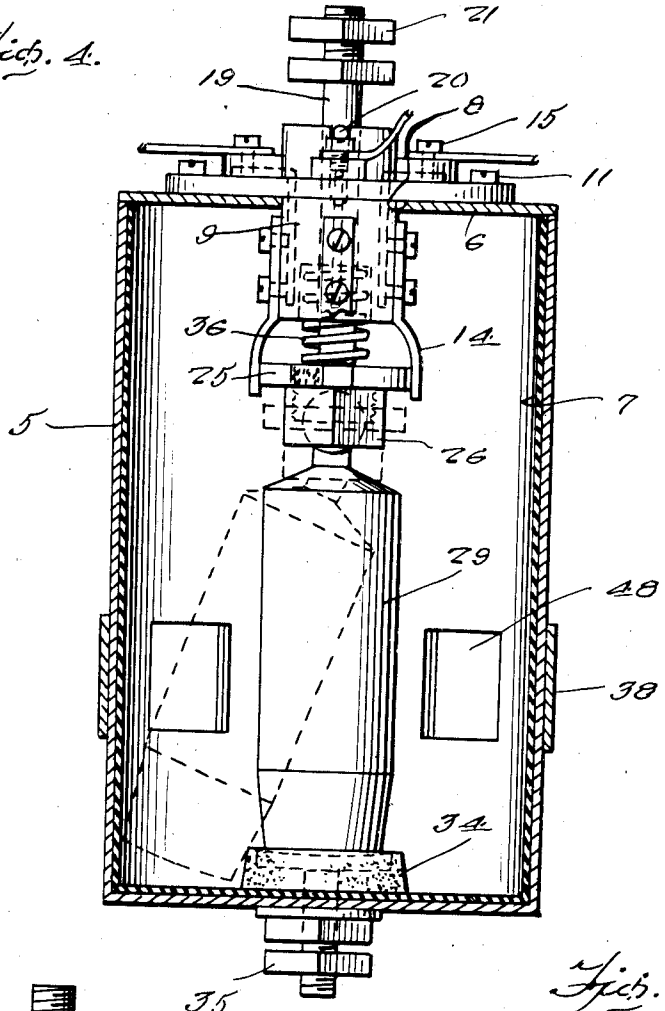

Fig. 8.

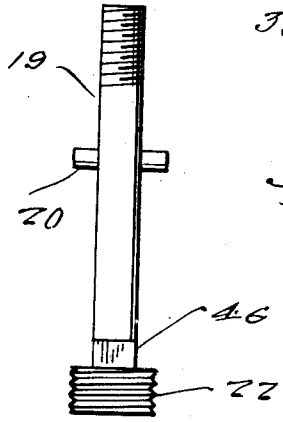

Fig. 9.

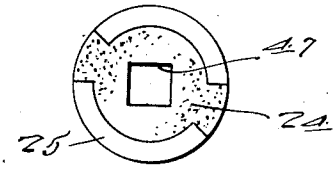

Inventor

Thomas Brooks

By Clarence A. O'Brien and Hyman Berman

Attorneys

Nov. 18, 1941. T. BROOKS 2,262,917

AUTOMATIC COLLISION SWITCH

Filed May 4, 1940 4 Sheets-Sheet 4

Fig. 6.

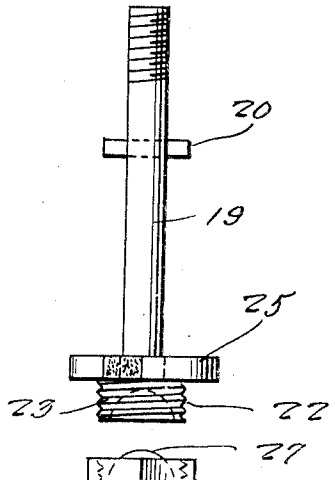

Fig. 5.

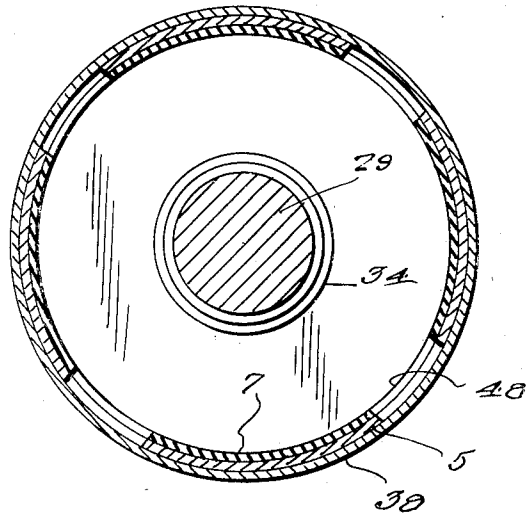

Fig. 10.

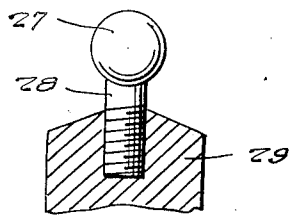

Fig. 11.

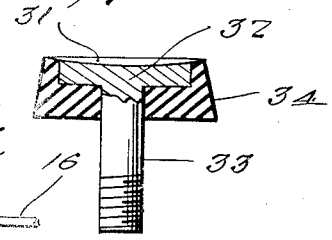

3

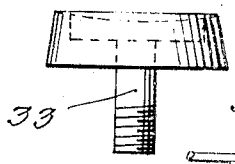

Fig. 13.

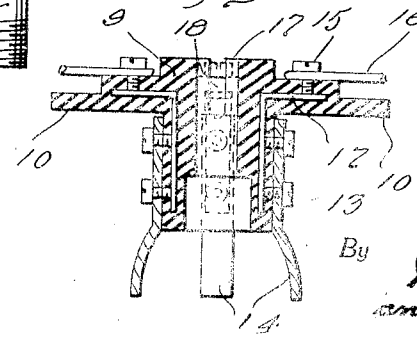

Inventor

Thomas Brooks

By Clarence A. O'Brien and Hyman Berman

Attorneys

Patented Nov. 18, 1941

2,262,917

UNITED STATES PATENT OFFICE

2,262,917

AUTOMATIC COLLISION SWITCH

Thomas Brooks, Manchester, N. H.

Application May 4, 1940, Serial No. 333,433

1 Claim. (Cl. 200—52)

The present invention relates to new and useful improvements in electric switches and has for its primary object to provide an automatic switch interposed in the ignition or lighting circuit of the vehicle and adapted to automatically break the circuit for shutting off the engine or to short the circuit immediately adjacent the battery upon a severe jolting of the vehicle, as for instance, by the impact caused by a collision.

While reference is had to the invention as adapted for use upon motor driven vehicles it will be understood that the automatic collision switch is equally well adapted to control any moving body where an electric circuit is employed as a part of the motive power, such as airplanes, railway trains and the like.

An important object of the present invention is to provide a collision switch of this character of simple and practical construction, which is efficient and reliable in performance, relatively inexpensive to manufacture and install in operative position and otherwise well adapted for the purposes for which the same is intended.

Other objects and advantages reside in the details of construction and operation as more fully hereinafter described and claimed, reference being had to the accompanying drawings forming part hereof, wherein like numerals refer to like parts throughout, and in which:

Figure 1 is a fragmentary side elevational view of a vehicle with parts broken away and shown in section.

Figure 2 is a top plan view of the collision switch housing.

Figure 3 is a side elevational view thereof.

Figure 4 is a vertical sectional view taken substantially on a line **4**—**4** of Figure 3.

Figure 5 is a transverse sectional view taken on a line **5**—**5** of Figure 3.

Figure 6 is a group side elevational view of the parts forming the central terminal extending through the housing.

Figure 7 is a bottom plan view of the top plate for the housing showing the plurality of contact fingers extending therefrom.

Figure 8 is a side elevational view of the outwardly projecting stem forming the upper end of the central contact.

Figure 9 is a bottom plan view of the disk providing contact for the plurality of contact fingers.

Figure 10 is a fragmentary sectional view of the collision actuated contact post.

Figure 11 is a vertical sectional view of the bottom contact.

Figure 12 is a diagram of the electric circuit, and

Figure 13 is a vertical sectional view taken substantially on a line **13**—**13** of Figure 7 of the insulation mounting for the contact fingers.

Referring now to the drawings in detail, the numeral **5** designates a cylindrical casing having a removable top **6** and having its side and bottom walls provided with an insulation lining **7**. The top **6** is provided with a central opening **8** within which is inserted a tubular insulation member **9** having flanges **10** at its upper end resting upon the top of the cover plate **6** and secured in position by means of screws **11**. A plurality of L-shaped conductors **12** are embedded in the member **9**, the vertical legs of the conductors being engaged by screws **13** which secure fingers **14** to the outside of the member **9**, the lower end of the fingers projecting downwardly below the insulation member and curved outwardly as shown in Figure 13 of the drawings. The horizontal leg portions of the conductors **12** are engaged by screws **15** to which circuit wires **16** are attached.

The insulation member **9** is provided with a vertically extending bore **17**, the upper end of which is provided with a pair of diametrically opposed slots **18**. A stem **19** is slidably mounted in the bore and is provided with a transversely extending pin **20** adapted for sliding engagement in the slots **18**. The upper end of the stem is threaded for receiving terminal nuts thereon.

The lower end of the stem **19** is provided with an externally threaded extension **22** having a concaved socket **23** in its under side and immediately above the extension is an insulation disk **24**.

At diametrically opposite sides of the peripheral edges of the disk **24** is a pair of contacts **25**, each of the contacts being adapted for engaging a pair of the fingers **14**, as clearly shown in Figure 4 of the drawings.

Adapted for threaded engagement with the extension **22** is a nut **26** arranged for securing a ball **27** in position in the recess **23**. The ball is formed on a threaded stem **28** which is threaded in the top portion of a movable switch post **29**.

The bottom end of the switch post is slightly convexed as shown at **30** and adapted to conformably seat in the concaved surface **31** of a contact head **32** formed on the upper end of a threaded stem **33** which projects downwardly through the bottom of the housing **5**. The contact is insulated from the housing by means of

a cap 34 within which the contact is positioned. Terminal nuts 35 are threaded on the lower end of the stem 33.

A coiled spring 36 is interposed between the lower end of the insulation member 9 and the disk 24 whereby to yieldably urge the stem 19 as well as ther switch post 29 downwardly with the lower end of the latter in contacting engagement with the contact member 32, as clearly shown in the full line position of Figure 4 of the drawings.

The housing 5 is mounted in an upright position under the hood 37 of the vehicle by means of clamping members 38. A circuit wire 39 connects the contact 32 with the battery 40 and a circuit wire 41 connects the terminal nuts 21 of the post 19 with the starter motor or generator 42.

As shown in the diagrammatic view in Figure 12, the circuit wires 16 extend from a pair of the terminals of the fingers 14 to a magneto 43, while another pair of fingers 14 have the circuit wires 44—44 connected thereto, one of said wires 44 being connected to the battery in advance of the terminal 32 and the other wire 44 leading to a distributor 45.

Accordingly in the operation of the device, with the parts in their normal position as shown by the full lines in Figure 4, the circuits connecting the motor 42, the magneto 43 and the distributor 45 are closed, when their respective manual control switches are closed. Should a collision occur the lower end of the switch post 29 will be unseated from the contact 32, thus permitting the spring 36 to move the stem 19 downwardly for disengaging the contacts 25 from the fingers 14 and thus breaking the several circuits, the post then being retained in the position shown by the dotted lines.

The stem 19 is provided with a non-circular portion 46 on which a complementary shaped opening 47 in the disk 24 is positioned to thus prevent rotation of the disk on the stem and the pin prevents rotation of the stem so that each pair of the fingers 14 will always be in contact with their respective contacts 25 when the post is in its upright position.

A plurality of openings 48 are formed in the side walls of the casing 5, which are normally closed by one of the clamping members 38, the holes affording access to the post 29 by the fingers of a person or a suitable tool to replace the post in its upright position.

It is believed the details of construction, operation and advantages of the invention will be readily understood from the foregoing without further detailed explanation.

Having thus described my invention, what I claim is:

A collision switch for moving bodies wherein the latter includes an electric circuit, said switch comprising a plurality of stationary contact fingers having circuit connections extending therefrom, a spring actuated stem, a plurality of contacts carried by the stem and insulated therefrom for electrically connecting said fingers in pairs, an impact post swivelly connected at one end to the stem for longitudinal movement with the stem, a casing for the switch, a stationary contact in the casing forming an abutment for the free end of the post, said post and stem providing a conductor for a circuit extending through the casing independently of the circuit for said fingers, said free end of the post being dislodged from the last named contact when subjected to a predetermined sudden movement of the body for releasing the stem to break the circuit between the contacts of the stem and the fingers, said casing having switch resetting openings therein providing access to the post for replacing the same in engagement with said last named contact, said replacing movement of the post also returning the stem to circuit closing position.

THOMAS BROOKS.