P. W. FULLER.

SIGNALING DEVICE.

APPLICATION FILED FEB. 17, 1909. RENEWED JAN. 28, 1916.

1,197,473.

Patented Sept. 5, 1916.

3 SHEETS—SHEET 1.

Fig. 1.

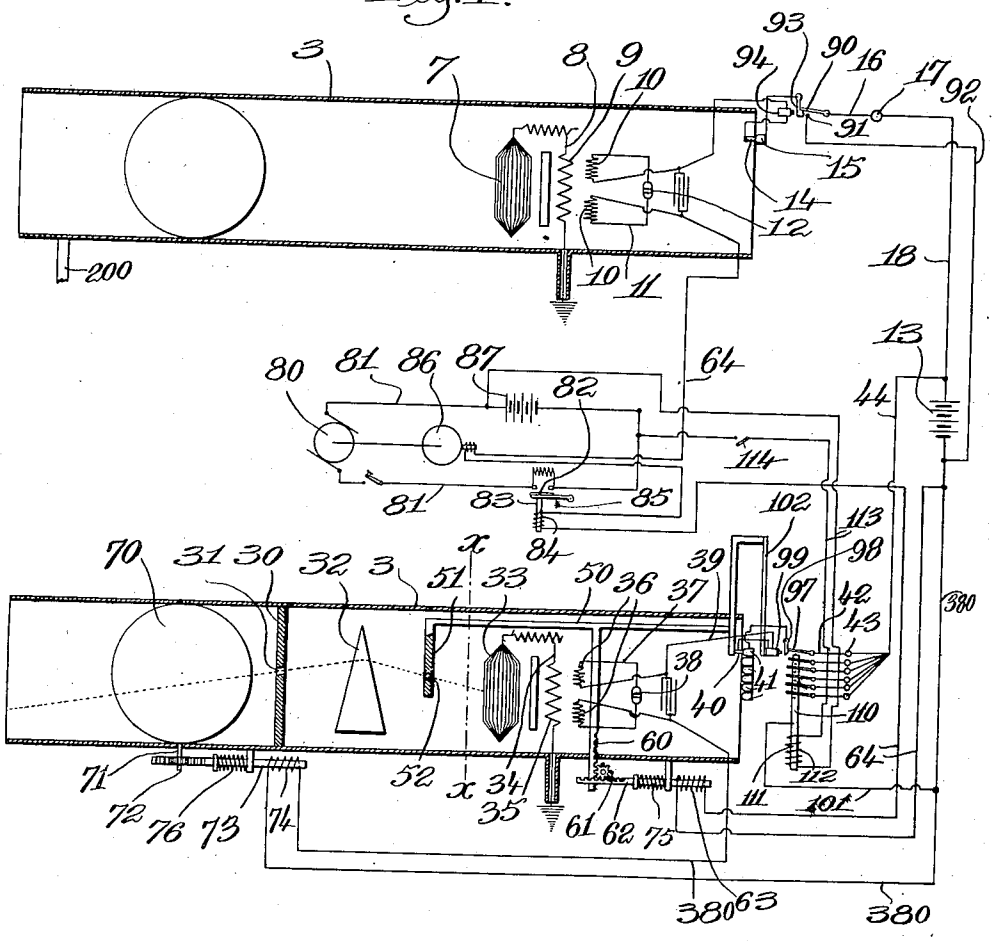

Fig. 2.

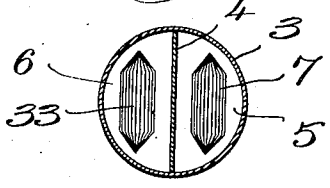

Witnesses.
Thomas J. Drummond,
Joseph M. Ward.

Inventor.
Percy W. Fuller,
by Lowry & Gregory Attys.

P. W. FULLER.

SIGNALING DEVICE.

APPLICATION FILED FEB. 17, 1909. RENEWED JAN. 28, 1916.

1,197,473.

Patented Sept. 5, 1916.

3 SHEETS—SHEET 2.

Fig. 3.

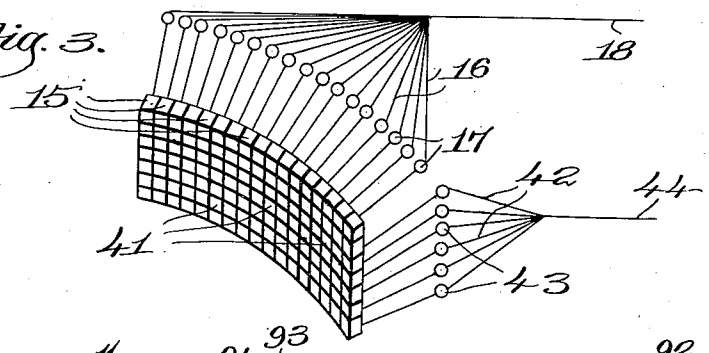

Fig. 4.

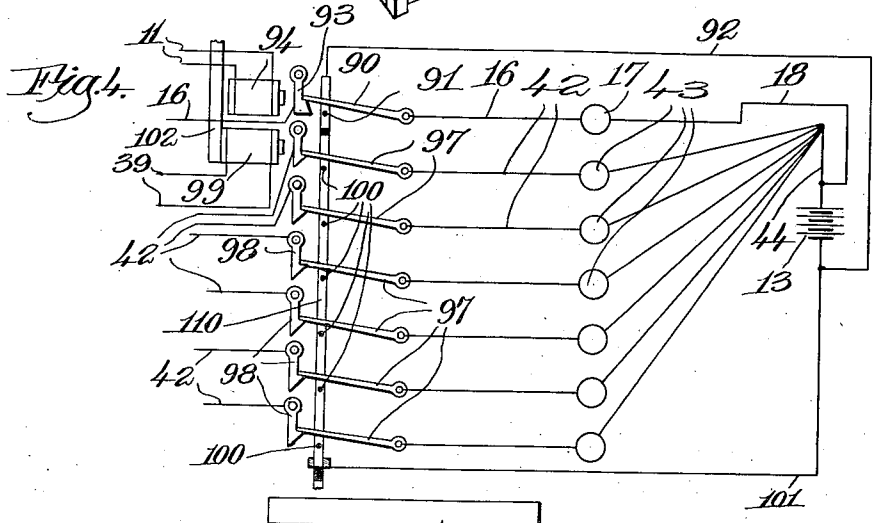

Fig. 5.

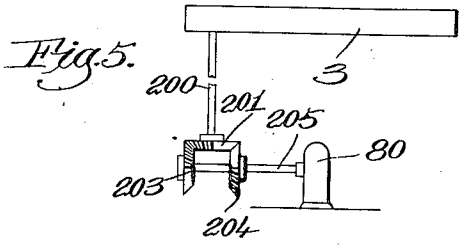

Fig. 6.

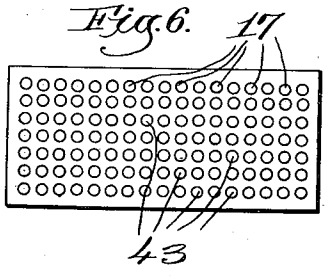

Fig. 7.

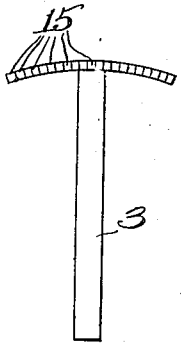

Witnesses.
Thomas J. Drummond
Joseph M. Ward.

Inventor.
Percy W. Fuller,
by Cleary & Gregory Attys.

P. W. FULLER.

SIGNALING DEVICE.

APPLICATION FILED FEB. 17, 1909. RENEWED JAN. 28, 1916.

1,197,473. Patented Sept. 5, 1916.

3 SHEETS—SHEET 3.

Fig. 8.

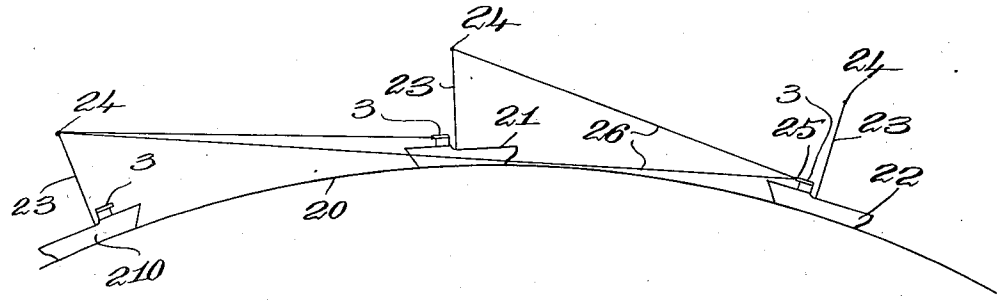

Fig. 9.

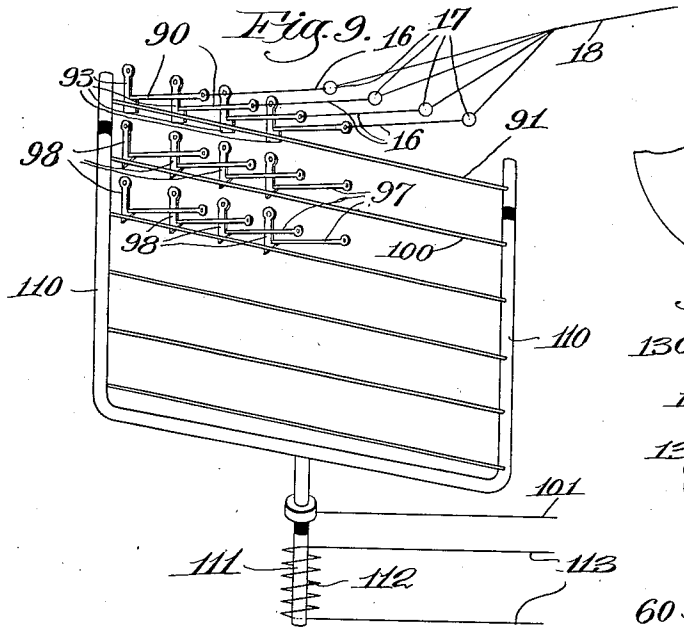

Fig. 10.

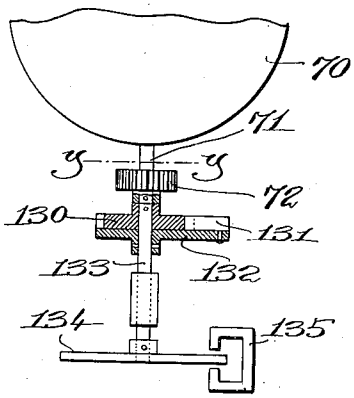

Fig. 11.

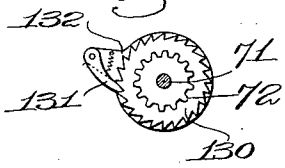

Fig. 12.

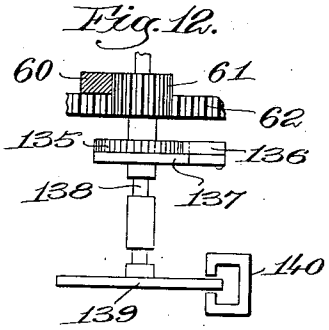

Witnesses.
Thomas J. Drummond,
Joseph M. Ward.

Inventor.
Percy W. Fuller,
by Emery & Thompson Attys.

UNITED STATES PATENT OFFICE.

PERCY W. FULLER, OF BOSTON, MASSACHUSETTS.

SIGNALING DEVICE.

1,197,473. Specification of Letters Patent. Patented Sept. 5, 1916.

Application filed February 17, 1909, Serial No. 478,377. Renewed January 28, 1916. Serial No. 74,855.

To all whom it may concern:

Be it known that I, PERCY W. FULLER, a citizen of the United States, residing at Boston, county of Suffolk, and State of Massachusetts, have invented an Improvement in Signaling Devices, of which the following description, in connection with the accompanying drawing, is a specification, like letters on the drawing representing like parts.

This invention has for its object to provide a wireless signaling apparatus by which both the distance and the direction of an object from a given point can be determined.

The device is arranged to be operated by electrical waves, and it involves both a transmitting apparatus and a receiving apparatus. The transmitting apparatus is stationed at the point the distance and direction of which from the observation point are to be determined, and said transmitting apparatus may be of any appropriate construction designed to project electrical waves of the character required for operating the receiver. The receiving apparatus is to be stationed at the observation point and is constructed so that when electrical waves are received thereby an indication is made, both of the direction from and the distance which said waves come.

The invention may be used in a great variety of ways, but will be especially useful for enabling ships at sea to learn the whereabouts of each other.

Referring now to the drawings wherein I have shown one embodiment of my invention, Figure 1 is a diagrammatic view showing the construction and the circuits of a receiving apparatus embodying my invention; Fig. 2 is a section on the line x—x, Fig. 1; Fig. 3 is a diagrammatic view of the contacts and circuits for the signal lamps; Fig. 4 is a detail view of the lamp circuits; Fig 5 is a construction showing a mechanism by which the wave receivers may be reciprocated; Fig. 6 is a general view of the signal board; Fig. 7 is a plan view of the wave receiver showing its relation to the contacts of the lamp circuits; Fig. 8 is a diagrammatic view showing the principle involved in the determination of the distance; Fig. 9 is a fragmentary view showing the contacts for the lamp circuits; Fig. 10 is a view showing the mechanism for operating the shutter in the wave receiver; Fig 11 is a section on the line y—y, Fig. 10; Fig. 12 is a detail of the mechanism for operating the movable screen.

The complete signal system comprises a transmitting apparatus to project electrical waves from the distant object and the receiving apparatus situated at the point of observation and adapted to receive such electrical waves and indicate the direction and distance of said object. The transmitting apparatus may have any suitable or usual construction adapted to project electrical waves of the character required to render the receiver operative, and, therefore, I have not illustrated herein any transmitting apparatus in detail. Said receiving apparatus comprises a receiver for receiving the electrical waves, a signal device and means rendered operative by the received electrical waves to cause the signal device to make an indication. The receiving apparatus is constructed in two parts, one of which is adapted to indicate the direction from which the electrical waves come, and the other of which is adapted to indicate the distance from which they come.

The receiving apparatus herein shown includes a wave receiver in the form of a tube 3 which will preferably be lined with zinc or some other material which will not reflect or otherwise affect electrical waves. Both the distance and the direction mechanism may be located in the same tube or they may be located in separate tubes. I have herein shown them both as located in the same tube which is divided into two compartments by a partition 4, as shown in Fig. 2, one of the compartments 6 having the apparatus therein which renders operative the distance indicator; and the other compartment 5 having therein the apparatus which renders operative the direction indicator.

The tube 3 is arranged horizontally and is mounted to swing about a vertical axis so that it can be made to point in different directions. Said tube may be mounted to swing either completely about its vertical axis or through a limited arc only and it is the latter construction I have shown herein. It is, of course, possible to mount the tube in a great variety of ways and I have herein simply indicated said tube as mounted on a vertical shaft 200 which has fast thereon a mutilated bevel gear 201 that

is adapted to be driven first in one direction and then in the other by two mutilated bevel gears 203, 204 mounted on a shaft 205 that may be driven from any suitable motor 80. This manner of oscillating or shifting the position of the tube 3 is not essential, however, and has only been shown to indicate one way in which it might be done.

The direction-indicating apparatus comprises an aerial 7 situated in the compartment 5 and an open oscillator circuit 8 connected with said aerial and leading to the ground. Said oscillator circuit has therein the primary 9 of a transformer, the secondary 10 of which is in a circuit 11 that includes a coherer 12 of suitable construction. One branch of this circuit leads to a battery 13 or other source of electrical energy and the other branch leads to a contact 14 carried by and moving with the wave receiver 3. This contact 14 is adapted to engage any one of a plurality of insulated contacts 15, each of which has connected thereto a lamp circuit 16 having a lamp or signal device 17 therein. The lamp circuits all connect to a return 18 that leads back to the battery or generator 13. As stated above the tube 3 is mounted to turn about a vertical axis so as to permit it to be pointed in different directions. If at any time during its movement, it is directed toward a distant object from which electrical waves are being projected, some of said waves will enter the tube and impinge on the aerial 7, thus setting up electrical oscillations in the oscillator circuit 9. The coherer 12 prevents any current from flowing through the circuit 11 under normal conditions, but when the electrical oscillations are set up in the circuit 9 as above described, said oscillations act through the circuit 11 to break down the resistance of the coherer in a well known way, thus permitting the current to flow in said circuit 11.

The particular lamp circuit 16 through which the current flows will depend upon the position of the tube 3 for as the tube swings through its arc, the contact 14 carried thereby is brought successively into engagement with the different contacts 15. The lamps 17 may be arranged in any convenient place from which they may be seen, and as will be readily seen, each lamp will represent a definite arc of the entire movement of the tube. By properly labeling the different lamps, it will be apparent that the direction from which the electrical waves are received can be readily determined by merely noting which lamp is lighted.

The part of the receiving apparatus for determining distance is constructed to operate upon the theory that all distant objects will be provided with a transmitting apparatus situated at a predetermined level above the surface of the earth. When a distant object situated at a predetermined distance above the surface of the earth moves away from the observer, such object appears to approach the horizon line as its distance from the observer increases. If, for instance, the object is at the top of a mast of a vessel, such object will appear to approach the horizon as the vessel disappears from the sight until finally the object at the top of the mast becomes invisible owing to the curvature of the earth's surface. The angle to a horizontal which a line between the observer's eye and said object makes will vary, therefore, according to the distance of the object from the observer. This is illustrated diagrammatically in Fig. 8 which shows a curved line 20 that may be taken to be the curvature of the earth, and three boats 210, 21 and 22, each having a mast 23 carrying at its upper end at a predetermined distance from the water line a transmitting apparatus 24. Assuming the observer to be placed at 25, it will readily be seen that the angular relation of the line 26 extending between the point of observation and the object 24 and the horizontal line will vary according to the distance of the object 24 from the point of observation.

Making use of this fact I have constructed the distance-indicating portion of my receiving apparatus in such a way that the angular relation between the line of propagation of the electrical waves and the horizontal may be measured and translated into distance. The mechanism which I have employed herein for accomplishing this object comprises a fixed screen 30 situated in the compartment 6 of the tube and made of any known material capable of excluding electrical waves, said screen having an aperture 31 through which a beam of electrical waves may pass, a prism 32 of suitable material, such as pitch, paraffin, wood or glass which will refract electrical waves and an aerial 33 situated in said compartment on which the refracted electrical waves are adapted to impinge. This aerial has connected thereto an oscillator circuit 34 which leads to the ground and which has therein the primary 35 of a transformer, the secondary 36 of which is in a circuit 37 including a coherer 38. One side 380 of the circuit 37 leads to a battery or other suitable source of electrical supply which may conveniently be the battery 13 above referred to, and the other side 39 leads to a contact 40 which is supported by and moves with the tube 3 and which is adapted to engage any one of a plurality of insulated contacts 41 each of which is connected to a lamp circuit 42 having a lamp 43 therein. The lamp circuits are all connected to a return 44 which leads back to the battery 13. The contacts 41 are arranged in rows, one above the other, and

there will be as many contacts in each row as there are contacts 15 in the direction-indicating portion of the apparatus. Any number of rows of contacts 41 may be employed and I have shown five such rows herein, that being sufficient to illustrate the principle of the invention. The contact 40 is carried by a movable frame or device 50 which also carries a screen 51 capable of excluding electrical waves and having an aperture 52 therein through which a beam of electrical waves may pass. The screen 51 is normally in position to intercept the refracted electrical waves and prevent them from impinging on the aerial 33. Whenever electrical waves projected from a distant object are received in the compartment 6, the beam of waves which passes through the aperture 31 becomes refracted by the prism 32 and the direction it takes after refraction will depend upon the angular relation between the direction of said waves and a horizontal line. Assuming that the tube is in the right direction to receive electrical waves from a distant object, it will be seen that if the movable screen 51 is moved vertically, it will finally come in such position that the refracted beam of electrical waves will pass through the aperture 52 therein and will thus be permitted to impinge on the aerial 33. As soon as this occurs, electrical oscillations will be set up in the circuit 34, and such oscillations acting through the circuit 37 will operate to break down the resistance of the coherer sufficiently to permit a current to flow in the circuit 37. Since the contact 40 is carried by the same frame 50 which carries the screen 51, said contact will move up and down with the screen 51 and it will be in engagement with a contact in one or the other of the rows of contacts 41 according to the vertical position of the screen. The lamps 43 in the lamp circuits 42 can be arranged on a board in rows corresponding to the arrangement of the contacts 41, and thus when any lamp 43 is lighted, the corresponding vertical position of the screen 51 can be determined. From the above description of the principle on which this distance-indicating portion of the invention is based, it will be readily seen that the different rows of lamps correspond to different distances, and by properly labeling the lamps or by providing a proper table for use in reference therewith, the distance of a distant object can be instantly known by noting in which horizontal row the lighted lamp 43 is located. The different lamps 43 in each horizontal row indicate different directions in the same manner that the different lamps 17 do.

The screen 51 may be given its vertical movement in any suitable way. I have, however, herein shown an apparatus which is normally idle, but which is set in operation as soon as current flows in the circuit 11 so that as soon as a distant object has been sighted by the direction-detecting part of the instrument, the screen 51 will begin to move vertically and will continue its vertical movement until the aperture 52 is brought in line with the refracted beam of waves, at which time its movement will be arrested. This is accomplished herein by providing an actuator for the screen which is controlled by the current in the circuit 11.

As herein shown the screen is provided with a stem 60 having gear teeth thereon that mesh with a pinion 61, and said pinion 61 meshes with and is driven by an actuator 62 which has gear teeth at one end, and the other end of which constitutes a core for a solenoid 63. This solenoid 63 is in the side 64 of the circuit 11 so that as soon as current flows through said circuit 11, said solenoid will be energized and by giving movement to the actuator will actuate the frame 50. I propose to arrest the downward movement of the screen when the aperture 52 is in line with the refracted beam of electrical waves by closing the compartment 6 to the electrical waves. This can be conveniently done by means of a shutter shown at 70 which when closed is adapted to exclude electrical waves. This shutter is normally in position to permit the electrical waves to enter the tube but when the shutter is turned it will close the tube and exclude electrical waves therefrom. Mechanism is provided to close the shutter when the screen 51 is properly positioned to permit a refracted beam of electrical waves to pass through the aperture 52. The shutter herein shown is similar in construction to an ordinary stove pipe damper, but is made of material impervious to electrical waves. It is mounted on a shaft 71 which has fast thereon a pinion 72 that is driven by an actuator 73 in the form of a bar, one end of which is shaped to present rack teeth to engage the pinion, and the other end of which constitutes a core for a solenoid 74 that is in the side 380 of the circuit 37. From this it will be seen that as soon as current flows in the circuit 37, the solenoid 74 will be energized thereby closing the shutter 70. As soon as the shutter is closed, electrical waves will be excluded from the tube, the electrical oscillations will cease in the circuit 9, and the coherer 12 will again prevent any current from flowing in the circuit 11, whereby the solenoid 63 will be again deënergized and the frame 50 and screen 51 will be restored to their initial position by a spring 75 or its equivalent.

The closing of the shutter also shuts off the electrical waves from the aerial 33 whereby the coherer 38 will again prevent any current from flowing in the circuit 37, and the solenoid 74 will thus become de-

energized. When this occurs, a spring 76 or its equivalent will restore the shutter to its normal or open position.

My apparatus is so arranged that when during the oscillating movement of the tube 3 a distant object is sighted, the tube is brought to rest until the distance has been indicated as above described, and the shutter 70 has been closed, and then the tube will begin its oscillations again, so that by the time the shutter has been opened again by the spring 76, the tube will have been carried out of range with the object. I propose to accomplish this by operating the tube by means of a motor 80, the circuit 81 of which is controlled by a switch which in turn is controlled by the current in the side 64 of the circuit 11. The switch for the motor circuit is indicated at 82 and it has connected therewith the core 83 of a solenoid 84 which is in the side 64 of the circuit 11. The switch 82 is normally closed by means of a suitable spring 85, but when current is flowing in the circuit 11 the solenoid 84 becomes energized and draws the core 83 downward thereby opening the switch. As soon as the motor circuit 81 is opened, the motor is brought to rest by an eddy-current brake indicated generally at 86, the magnet of which is also in the side 64 of the circuit 11, so that as soon as said circuit is closed, said magnet becomes energized and the brake 86 is rendered operative to stop the motor the instant that the switch 82 is opened. The motor circuit 81 is shown as having a battery or other source of electrical energy 87 therein.

Since the solenoid 84 which controls the switch 82 is in the circuit 11, it will follow that as soon as the shutter 70 is closed, as above described, and the current ceases to flow in the said circuit 11, the solenoid 84 will be deënergized and the spring 85 will operate to close the motor circuit again, thus setting the motor in operation.

It will thus be seen that whenever the tube 3 is brought into such a position as to be directed toward a distant object from which electrical waves are projected, the tube will be immediately brought to rest and an indication will be made of both the direction and distance of said object, and that as soon as this indication has been made, the tube will be again started in motion. Since the time that the tube is at rest is comparatively short, it is desirable that some means be provided for maintaining the indication after the shutter 70 is closed and after the tube has again begun its movement, so that a person watching the indicator will have sufficient time to fully read any indication before the lamps go out. Accordingly I have provided a construction whereby the signal lamps 17, 43 will remain lighted until the tube has completed its oscillations at which time the lamps are all extinguished ready to be lighted again during the next oscillation of the tube, provided the distant object is sighted during such oscillation.

For maintaining the lamps 17 lighted as above specified, I have provided each of the lamp circuits 16 with a swinging contact member 90 which constitutes a contact that is adapted to engage a fixed contact 91 that is in the shunt circuit 92. Each contact member 90 is normally held out of engagement with the fixed contact 91 by a latch 93 which is in the form of an armature for a magnet 94. The magnet 94 is fixed to the tube 3 and moves therewith, and its coils are in the circuit 11, as clearly seen in Fig. 1. Since this magnet is carried by the tube, it will be apparent that as the tube swings the magnet will be carried in line with the armatures 93 successively and whenever the coherer 12 is broken down and as a consequence the current flows in the circuit 11, the particular armature latch with which the magnet 94 is in alinement at such time will be withdrawn thereby permitting the swinging contact member 90 to drop into engagement with the fixed contact 91. A shunt circuit is thus established which will maintain the lamp lighted until the contact 90 is again separated from the contact 91. Substantially the same construction is employed in connection with the lamp circuits 42 of the distance-indicating portion of the apparatus. Each of said circuits 42 has therein a swinging contact member 97 which is normally engaged by a latch 98 that constitutes an armature for a magnet 99. A fixed contact 100 extends underneath the swinging contacts 97 in each row and these fixed contacts are connected with a shunt circuit 101 that leads back to the battery. The magnet 99 is carried by an arm 102 which is secured to the frame 50 so that said magnet moves up and down with the frame which carries the screen 51. The magnet 99 has therefore a movement up and down in unison with the screen and with the contact 40. The coils of said magnet 99 are in the side 39 of the circuit 37 and therefore whenever the current flows in said circuit the magnet 99 will be energized and the armature latch which is at that instant in line with the magnet will be withdrawn thereby permitting the corresponding swinging contact member to drop down into engagement with the fixed contact 100. The shunt circuit 101 is thus closed and the lamp 43 will remain lighted so long as the contacts 97 and 100 are in engagement.

I have also provided means whereby the swinging contacts 90 and 97 may be restored to their initial positions when the tube 3 has completed its oscillation. I accomplish this herein by mounting the fixed contacts 91 and 100 upon a frame 110 which is adapted to be elevated when the tube 3

completes its oscillation thereby lifting the contacts 90 and 97 back into engagement with the latches. This frame is provided with a stem 111 which forms the core of a solenoid 112, the coils of which are in a circuit 113 connected with the motor circuit and controlled by a switch 114. The switch 114 is normally open but is arranged to be closed by the tube 3 when it completes any oscillation and when said switch is closed the solenoid 112 will be energized thereby drawing the core 111 upwardly and lifting the frame 110 to restore the swinging contacts 90, 97 to their initial positions into engagement with the latches. After the contacts have thus been restored to their initial position, the operations above described are repeated and during the next oscillation of the tube 3 indication will be made of the presence of any vessel or other object which is transmitting electrical waves and which is within range of the apparatus, the indication being such as to give both the distance and direction of such object.

In the present embodiment of my invention the means for operating the shutter 70 and also the means for operating the frame 50 are so constructed that they will have a comparatively slow movement when the solenoids 63 and 74 are energized, but will be quickly returned to their initial position after the solenoids are deënergized. This is herein accomplished so far as the shutter 70 is concerned by making the gear 72 rigid with a ratchet wheel 130 with which cooperates a pawl 131 carried by a pawl carrier 132 on a shaft 133. Said shaft has associated therewith an eddy-current brake of usual construction comprising a disk 134 fast to the shaft, and a magnet 135 between the poles of which the disk plays.

Owing to the pawl and ratchet construction above described, the turning of the shaft 71 to close the shutter 70 will turn the shaft 133 and during this movement, the eddy-current brake has a retarding influence. As soon as the solenoid 74 is deënergized, however, the spring 76 opens the shutter quickly, this movement being permitted without the retarding of the eddy-current brake by reason of the pawl and ratchet construction. Substantially the same construction is used in connection with the operating means for the frame 50. As shown in Fig. 12, the pinion 61 has rigid therewith a ratchet wheel 135 with which a pawl 136 has engagement, said pawl being carried by a pawl-carrier 137 mounted on a shaft 138 which has the disk 139 of an eddy-current brake thereon. By reason of this construction, the downward movement of the frame 50 will be retarded, while the upward movement will be a quick one.

The complete operation of my invention will be fully understood from the above description, but it may be briefly summed up as follows: The tube 3 under normal conditions is oscillating back and forth with the shutter 70 open. As soon as electrical waves from a distant object are received by said tube, those waves which enter the compartment 5 impinge on the aerial 7 with the result that electrical oscillations are set up in the circuit 8, which oscillations acting through the transformer 9, 10 operate to cause the coherer 12 to break down sufficiently to permit current to flow in the circuit 11. As soon as this occurs, the particular lamp 17 corresponding to the position of the tube will be lighted, and at the same time the magnet 94 will be energized, thus withdrawing the armature latch 93 corresponding to the position of the tube and establishing a permanent circuit through the lighted lamp 17. Simultaneously with this operation the beam of electrical waves which passes through the aperture 31 will be refracted by the prism 32, and the frame 50 carrying the screen 51 will begin to move downwardly until the aperture 52 is in line with said beam. This beam of electrical waves then is allowed to impinge on the aerial 33 with the result that the coherer 38 will be broken down and current will flow in the circuit 39, thus lighting one of the lamps 43. By noting which lamp 43 and which lamp 17 is lighted, the direction and distance of the object projecting the electrical waves can be determined as above explained. The current in the circuit 39 energizes the magnet 99 and thus one of the armature latches 98 will be retracted thereby to close the shunt circuit through the lighted lamp 43. As soon as the current flows in the circuit 11, the motor will be stopped and the tube 3 will be brought to rest, and as soon as current flows in the circuit 39, the shutter will be closed with the result that the motor will be again started and the tube will be again set in motion. When the tube reaches the end of its oscillation, the circuit 113 is closed, thereby energizing the solenoid 112 and restoring all of the contacts 90, 97 to their initial position in engagement with their latches. If during the next oscillation any electrical waves are received by the tube 3, the above operations are repeated.

I believe I am the first to provide a device which is actuated by electrical waves and which is arranged to indicate automatically and visually both the direction and the distance from which the electrical waves come, and I desire to claim this broadly.

While I have shown herein a selected embodiment of the invention, yet I wish it understood that the constructional details may be varied in many ways without departing from the invention.

Having fully described my invention,

what I claim as new and desire to secure by Letters Patent is:—

1. An apparatus for determining distance comprising a tube having therein means to convert electrical waves into electrical oscillations, and an indicator rendered operative by said electrical oscillations to indicate automatically the distance which the electrical waves have traveled.

2. In a device of the class described, the combination with a plurality of open circuits, of means to receive electrical waves projected from a distant point, and means rendered operative by said waves to close one or another of said circuits, that depending on the distance of said point.

3. In a device of the class described, the combination with a plurality of normally-open circuits, each corresponding to a certain distance, of means to receive electrical waves projected from a distant point, and means operated by said waves to close that circuit which corresponds to the distance between said point and the receiving means.

4. In a device of the class described, the combination with a receiver adapted to receive electrical waves, of means associated with said receiver and sensitive to electrical waves to indicate automatically the distance from which electrical waves received by said receiver have been projected.

5. In a device of the class described, the combination with a receiver constructed to receive at any one time electrical waves from one direction only, of means associated with said receiver and sensitive to electrical waves to indicate automatically the distance from which the electrical waves received have been projected.

6. In a device of the class described, the combination with a receiver constructed to receive at any one time electrical waves from one direction only, of means to shift the position of said receiver, and means rendered operative by electrical waves received by the receiver to indicate the distance from which said electrical waves have been projected.

7. In an apparatus of the class described, the combination with a receiver to receive electrical waves, of means to turn said receiver about a vertical axis, a plurality of signal circuits corresponding to different angular positions of the receiver and means sensitive to electrical waves received by the receiver to render operative the signal in the circuit corresponding to the direction from which the electrical waves have come.

8. The combination with an electrical wave receiver, of means to turn said receiver about a vertical axis, a plurality of signal circuits corresponding to different angular positions of said receiver, means sensitive to electrical waves received by the receiver to render operative the signal in the circuit corresponding to the direction from which the electrical waves have come, and means to bring the receiver to rest when any signal is rendered operative.

9. The combination with an electrical wave receiver, of means to turn said receiver about a vertical axis, a plurality of signal circuits corresponding to different angular positions of said receiver, means sensitive to electrical waves received by the receiver to render operative the signal in the circuit corresponding to the direction from which the electrical waves have come, means to bring the receiver to rest when any signal is rendered operative, and means rendered operative when the receiver is brought to rest to indicate the distance from which said electrical waves have come.

10. In a device of the class described, the combination with a horizontally-arranged tubular receiver for receiving electrical waves, of means to turn it about a vertical axis, means associated with said receiver, and sensitive to electrical waves to indicate the direction of said receiver when electrical waves are received thereby, means to stop the movement of the receiver when electrical waves are received thereby, and separate means rendered operative when said receiver is brought to rest to indicate the distance which said electrical waves have traveled.

11. The combination with a receiver constructed to receive at any one time electrical waves from one direction only, of means to shift the position of said receiver, means sensitive to electrical waves to indicate the distance from which any electrical waves received by the receiver have been projected, and means to maintain the indication for a length of time after the wave receiver has moved out of the position in which it can receive the electrical waves which have caused the indication.

12. The combination with a receiver constructed to receive at any one time electrical waves from one direction only, of means to shift the position of said receiver, means sensitive to said electrical waves to indicate both the distance and the direction from which any electrical waves received by the receiver have been projected, and means to maintain this indication for a length of time after the receiver has moved out of a position in which it can receive the electrical waves which have caused the indication.

13. The combination with a receiver constructed to receive at any one time electrical waves from one direction only, of means to shift the position of said wave receiver, means sensitive to electrical waves to indicate the distance from which any such waves received by the receiver have been projected, and means to maintain said indication for a length of time after the receiver has

moved out of the position in which it can receive the electrical waves which have caused the indication.

14. In a device of the class described, a wave receiver comprising two parallel compartments, means in each compartment to convert electrical waves into electric current, distance-indicating means operated by the current liberated in one compartment, and direction-indicating means operated by the current liberated in the other compartment.

15. In a device of the class described, a wave receiver comprising a tube divided longitudinally into two compartments, means to oscillate said tube about a vertical axis, means in each compartment to convert electrical waves into electric current, distance-indicating means operated by the current liberated in one compartment, and direction-indicating means operable by the current liberated in the other compartment.

16. In a device of the class described, a wave receiver comprising a tube divided longitudinally into two compartments, means to oscillate said tube about a vertical axis, means in each compartment to convert electrical waves into electric current, distance-indicating means operated by the current liberated in one compartment, direction-indicating means operated by the current liberated in the other compartment, and means to bring the tube to rest when electrical waves are received thereby.

17. The combination with a receiver constructed to receive at any one time electrical waves from one direction only, of means to shift the position of said receiver, means sensitive to electrical waves to indicate the direction from which any such waves received by the receiver have been projected, and means to maintain said indication for a length of time after the receiver has moved out of the position in which it can receive the electrical waves which have caused the indication.

In testimony whereof, I have signed my name to this specification, in the presence of two subscribing witnesses.

PERCY W. FULLER.

Witnesses:
LOUIS C. SMITH,
THOMAS J. DRUMMOND.