United States Patent [19]

McFarlane

[11] Patent Number: Des. 284,030

[45] Date of Patent: ** May 27, 1986

[54] SHIELD FOR HYPODERMIC NEEDLE

[76] Inventor: **Richard H. McFarlane**, 2571 Kaneville Rd., Geneva, Ill. 60134

[**] Term: **14 Years**

[21] Appl. No.: **500,452**

[22] Filed: **Jun. 2, 1983**

[52] **U.S. Cl.** **D24/25**

[58] **Field of Search** D24/25, 14, 29, 60; 604/192, 197, 198, 199

[56] **References Cited**

U.S. PATENT DOCUMENTS

D. 198,263	5/1964	Tietje et al.	D24/60 X
4,249,530	2/1981	Millet	604/192

FOREIGN PATENT DOCUMENTS

804909	1/1969	Canada	604/192

Primary Examiner—A. Hugo Word
Assistant Examiner—Stella M. Reid
Attorney, Agent, or Firm—John Cyril Malloy

[57] **CLAIM**

The ornamental design for a shield for hypodermic needle, as shown and described.

DESCRIPTION

FIG. **1** is an isometric view of a shield for hypodermic needle showing my new design;
FIG. **2** is a front elevational view of the embodiment of FIG. **1**;
FIG. **3** is a top plan view thereof, the bottom being identical;
FIG. **4** is a left end elevational view thereof; and
FIG. **5** is a right end elevational view thereof.

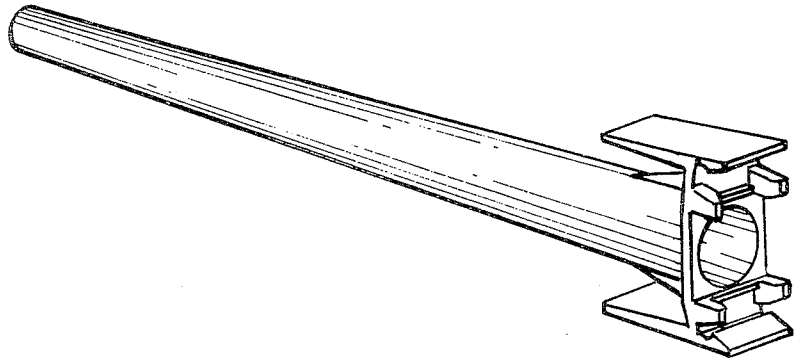

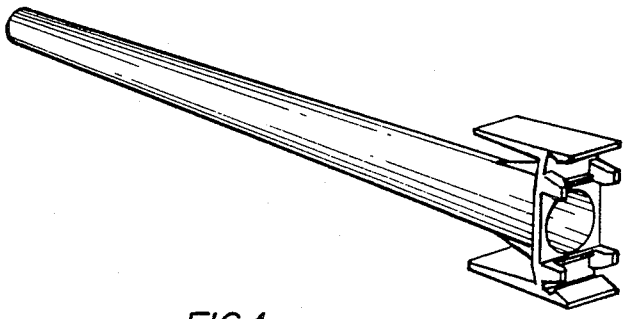

FIG.1

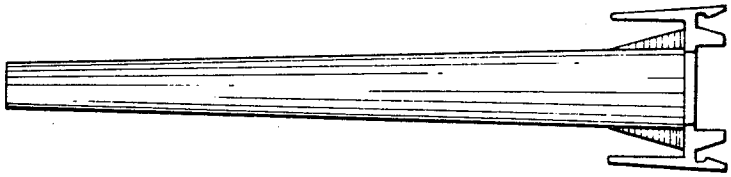

FIG.2

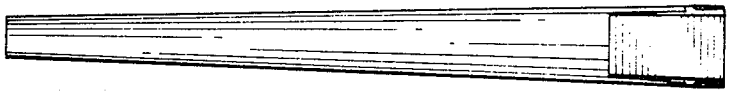

FIG 3

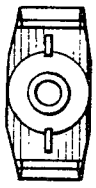

FIG.4



FIG.5