United States Patent [19]

Umino et al.

[11] **Patent Number: Des. 283,512**

[45] **Date of Patent: ** Apr. 22, 1986**

[54] **ELECTROSTATIC COPYING MACHINE**

[75] Inventors: **Toshio Umino; Yasuhiro Saito; Tetsuya Goto,** all of Kanagawa, Japan

[73] Assignee: **Ricoh Company, Ltd.,** Japan

[**] Term: **14 Years**

[21] Appl. No.: **545,651**

[22] Filed: **Oct. 26, 1983**

[30] **Foreign Application Priority Data**

Apr. 26, 1983 [JP] Japan 58-017818

[52] **U.S. Cl.** **D16/31**

[58] **Field of Search** ..... D16/27-32; 355/3 R, 3 SH, 4-5, 8-11, 14 R, 14 SH, 35 H, 51

[56] **References Cited**

U.S. PATENT DOCUMENTS

D. 264,345	5/1982	Masaki	D16/31
D. 266,253	9/1982	Horikoshi	D16/31
D. 266,254	9/1982	Horikoshi	D16/31
D. 270,164	8/1983	Sawada	D16/31
D. 278,346	4/1985	Saito	D16/31
3,813,157	5/1974	Fantozzi	355/51 X
4,490,035	12/1984	Sugiura	355/8

OTHER PUBLICATIONS

Minolta Electrographic 301, (Flyer)-4/1/81-Copier on front.

Primary Examiner—Nelson C. Holtje
Attorney, Agent, or Firm—Guy W. Shoup

[57] **CLAIM**

The ornamental design an electrostatic copying machine, as shown and described.

DESCRIPTION

FIG. **1** is a front elevational view of an electrostatic copying machine showing our new design;
FIG. **2** is a top plan view thereof;
FIG. **3** is a right side elevational view thereof;
FIG. **4** is a left side elevational view thereof;
FIG. **5** is a rear elevational view thereof;
FIG. **6** is a bottom plan view thereof;
FIG. **7** is a right front perspective view thereof;
FIG. **8** is a right front perspective view thereof with the paper feeding and copy receiving trays in place, The feed tray being in the folds position;
FIG. **9** is a right front perspective view of FIG. **8** with the feed tray in the extended position;
FIG. **10** is a left side perspective view of FIG. **9** with the receiving tray in the folded position;
FIG. **11** is a left front perspective view of FIG. **9** with the receiving tray in the closed position.
The paper feed and receiving trays were omitted from FIGS. **1-7** for ease of illustration and clarity.

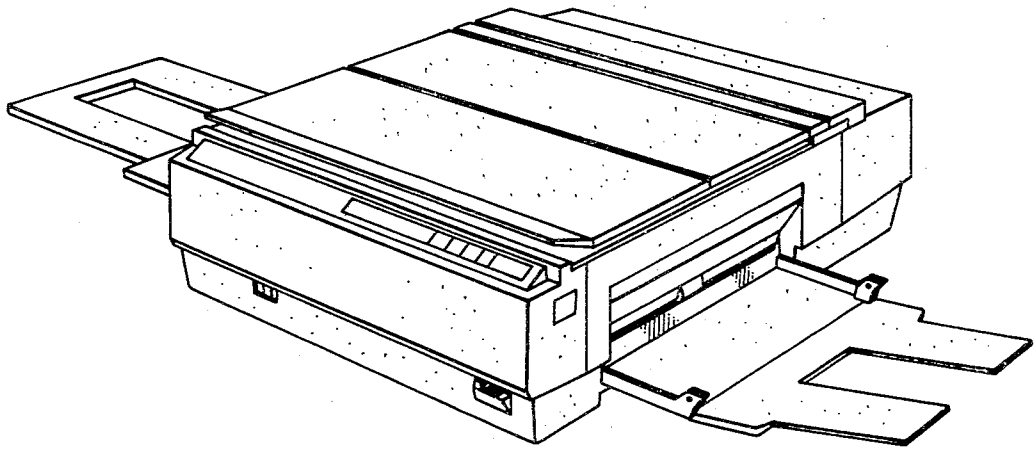

FIG. 1

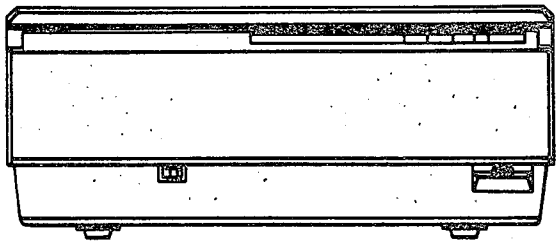

FIG. 2

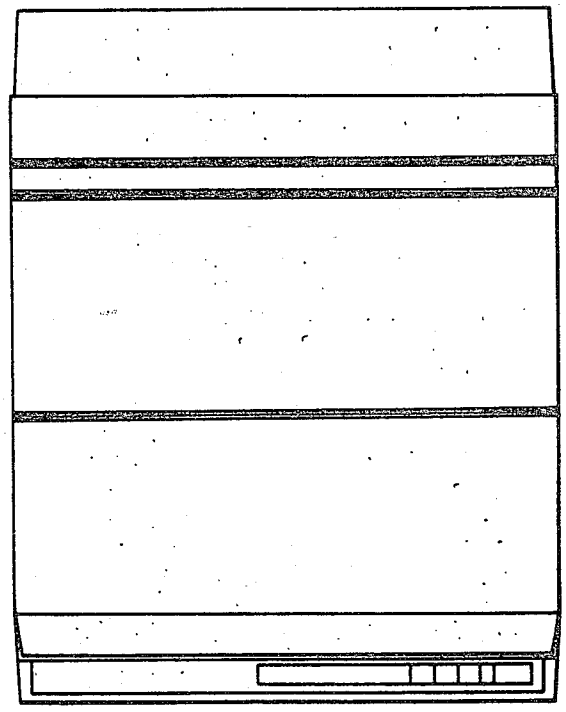

FIG. 3

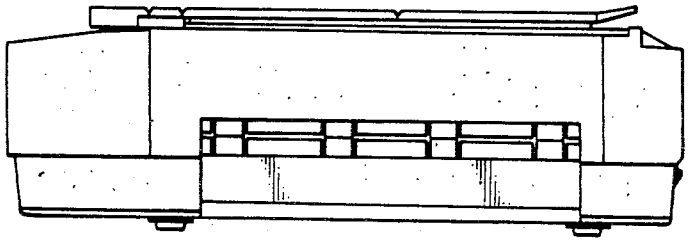

FIG. 4

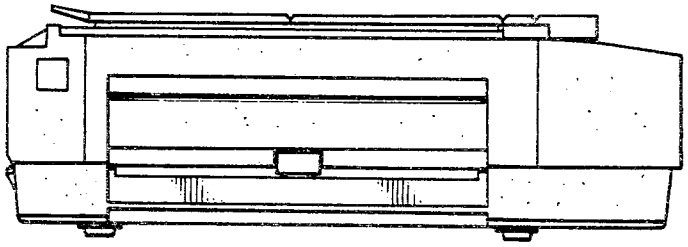

FIG. 5

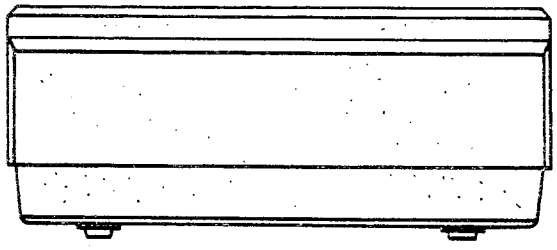

FIG. 6

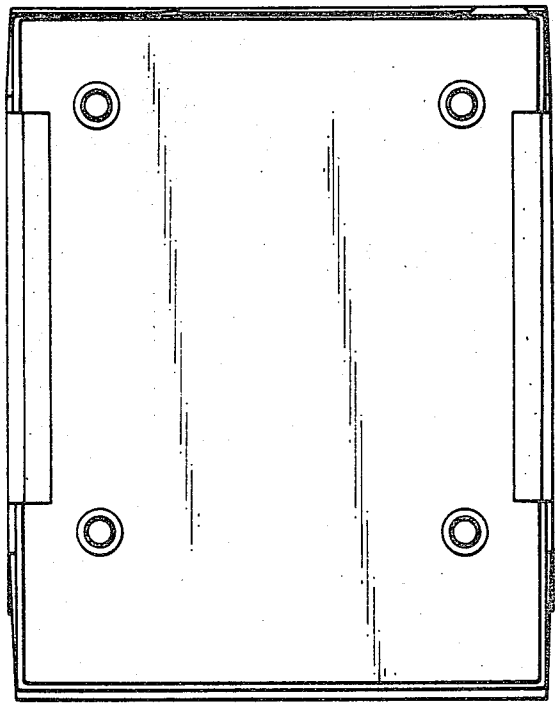

FIG. 7

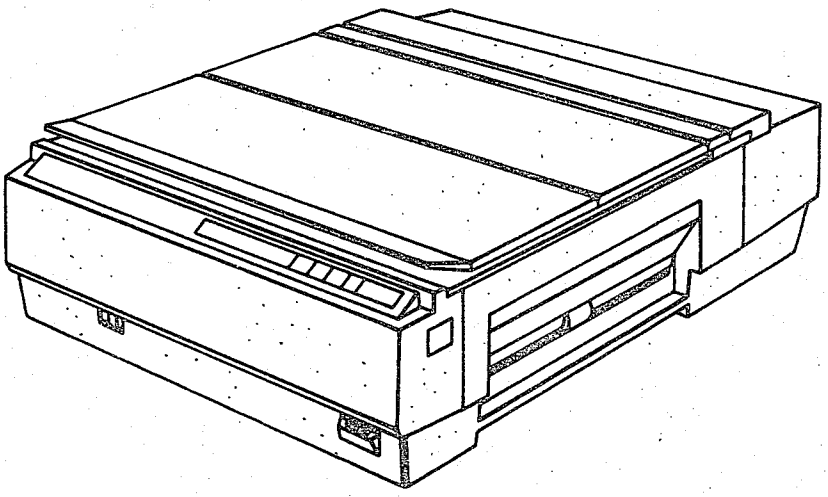

FIG. 8

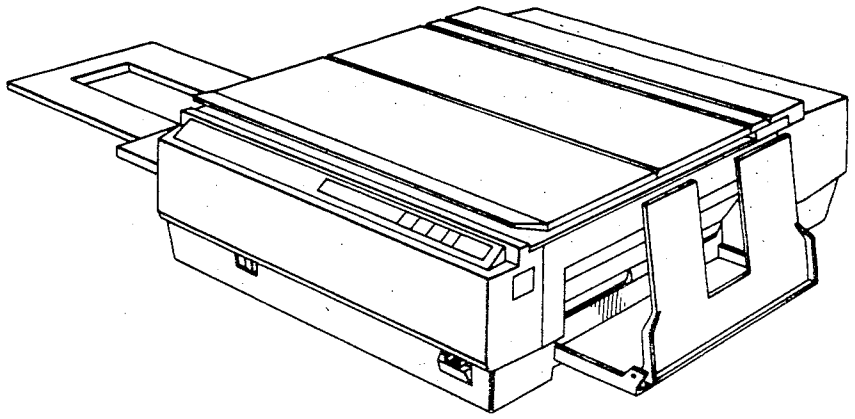

FIG. 9

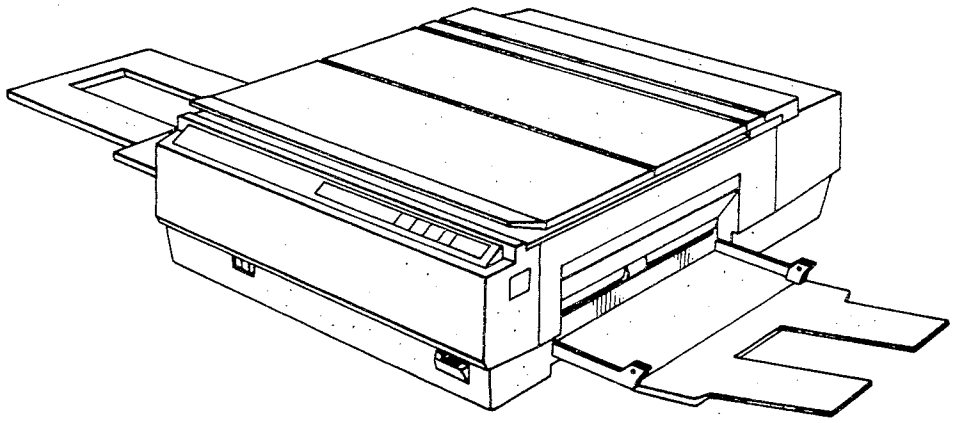

FIG. 10

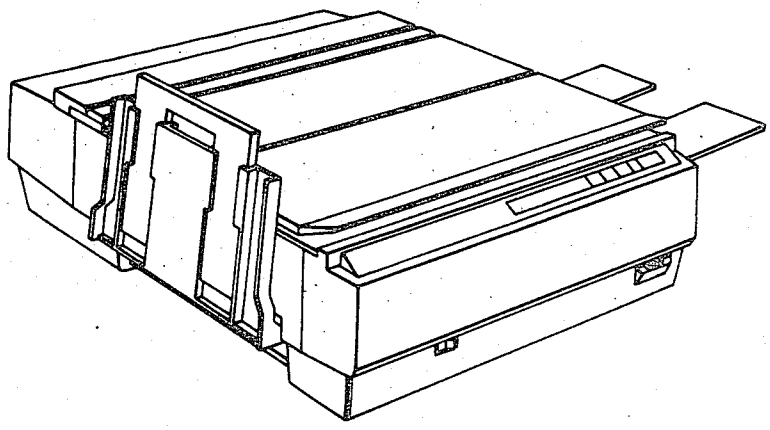

FIG. 11

