No. 778,696.

PATENTED DEC. 27, 1904.

A. McKENZIE.

CABINET.

APPLICATION FILED APR. 15, 1904.

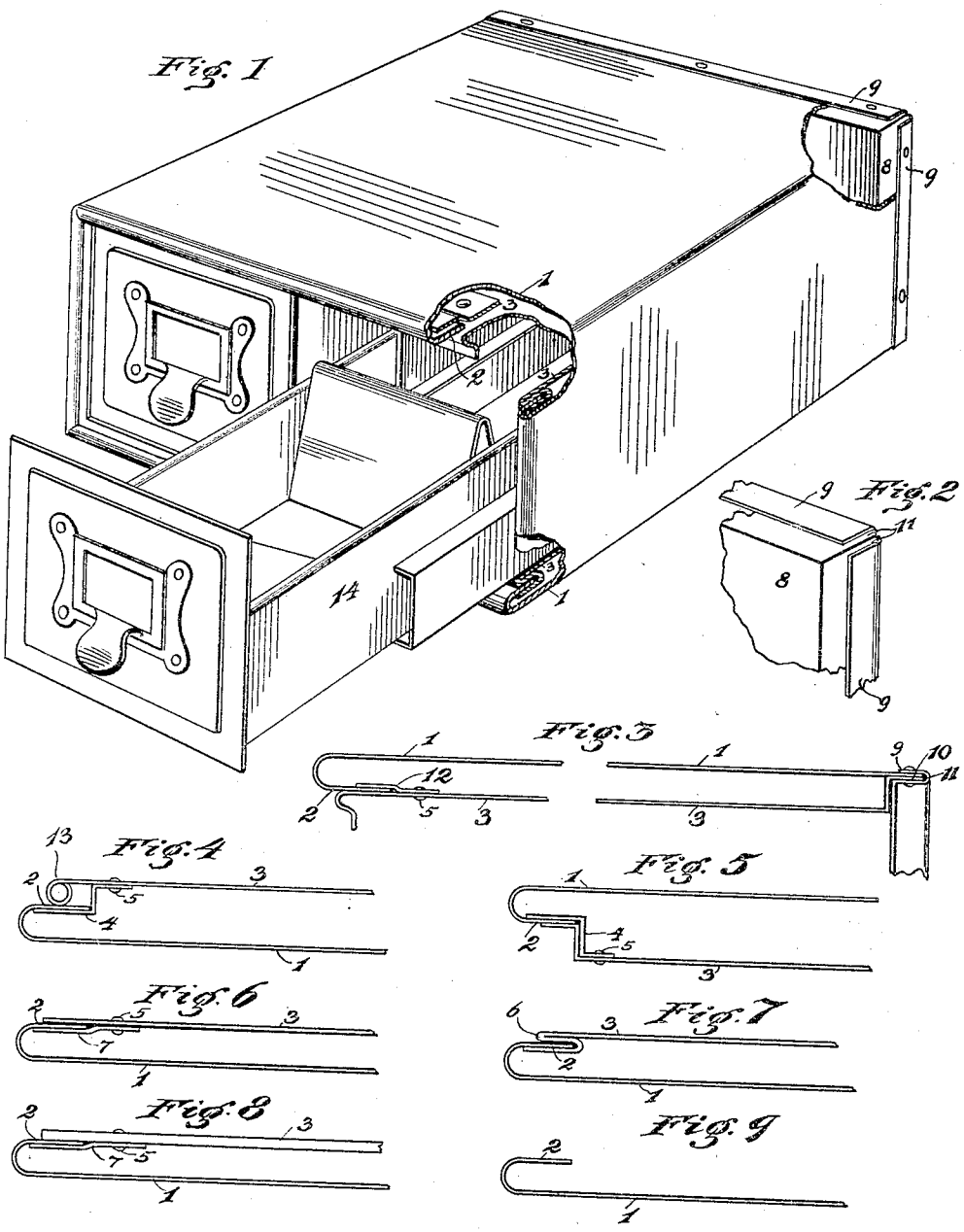

Witnesses

J. R. Bond,

Niles A. Spouseller

Inventor

Angus McKenzie

By F. W. Bond

Attorney

No. 778,696. Patented December 27, 1904.

UNITED STATES PATENT OFFICE.

ANGUS McKENZIE, OF CANTON, OHIO, ASSIGNOR TO THE BERGER MANUFACTURING COMPANY, OF CANTON, OHIO.

CABINET.

SPECIFICATION forming part of Letters Patent No. 778,696, dated December 27, 1904.

Application filed April 15, 1904. Serial No. 203,284.

To all whom it may concern:

Be it known that I, ANGUS McKENZIE, a subject of the King of Great Britain, residing at Canton, in the county of Stark and State of Ohio, have invented certain new and useful Improvements in Cabinets; and I do hereby declare that the following is a full, clear, and exact description of the same, reference being had to the annexed drawings, making a part of this specification, and to the numerals of reference marked thereon, in which—

Figure 1 is a perspective view showing parts broken away and illustrating a cabinet with two filing-drawers. Fig. 2 is a view showing a portion of the back or rear end of the cabinet-casing. Fig. 3 is a horizontal section of the top of the cabinet-casing, showing a portion of the back plate. Figs. 4, 5, 6, and 7 illustrate slight modifications of connections for the inner and outer casing of the cabinet proper. Fig. 8 illustrates a modified form from that illustrated in Figs. 6 and 7. Fig. 9 is an edge view showing a portion of the outer wall.

The present invention has relation to cabinets designed to be formed of sheet metal and may be of any desired size or shape, reference being had to the various uses and purposes to which and for which cabinets of different styles and sizes may be employed or used. The cabinet casing or body proper is composed of two parts or walls, one constituting the inner casing and the other the outer and the inner and outer casings or walls spaced from each other for the purpose of producing an air chamber or space, said air chamber or space being located upon the sides, top, and bottom of the cabinet and at the end thereof.

Similar numerals of reference indicate corresponding parts in all the figures of the drawings.

In the accompanying drawings, 1 represents the outer casing or wall, which is formed of a size and shape to correspond with the size and shape of the cabinet designed to be constructed or to produce a single section of a cabinet if in the event a completed cabinet is designed to contain more than one section.

The outer wall or casing 1 is provided with the flange 2, which flange is formed at the front or forward end of the body portion and is spaced from the portion from which it is formed any desired distance. The inner wall or casing 3 is connected to the flange 2, formed upon the outer wall or casing at its forward end, and said inner wall held in proper relative position by means of said flange either by the use of the connecting-plates 4 and suitable rivets 5 or the inner wall may be provided with the open grooved end 6 and the flange 2, seated into the open grooved end, as illustrated in Fig. 7. Plates or strips 7 may be employed and located as illustrated in Figs. 6 and 8, which strips are so formed that they will form a recess between the inner wall and said strips, and into which recess the flanges 2 may be inserted, as illustrated in said Figs. 6 and 8.

In Fig. 8 a heavy inner wall is illustrated; but this is a question of judgment as to material only as to the thickness of the wall.

For the purpose of closing the rear end of the cabinet proper the back plate 8 is employed, which back plate is provided with the flanges 9, which flanges are located upon all of the edges of the rectangular back plate 8, and the flanges so located that the extended portion 10 of the outer wall or casing 1 can be seated into the grooves 11, formed by the flanges 9. The extended portion 10 is of such a length that when the back plate 8 is properly connected its inner face will abut against the rear end of the inner wall or casing 3, as illustrated in Fig. 3. It will be understood that if the open grooved end 6 is employed no rivets will be required to connect the forward portions of the inner and outer casing or walls together, owing to the fact that they cannot be displaced with reference to each other after the back plate 8 has been properly riveted, as illustrated in Fig. 3, the same being true with reference to the riveted plates 7, (shown in Figs. 6 and 8,) and the riveted plate 12. (Shown in Fig. 3.)

For the purpose of giving a neat appearance the forward end or edge of the inner

wall plate 3 may be provided with the bead 13, as illustrated in Fig. 4, and also form a stop as against the inward movement of the drawers 14. The drawers 14 are of course to be located within the chamber formed within the inner casing or shell, which drawers may be of any desired kind or style, reference being had to the purpose for which they are to be used.

It will be understood that by forming the cabinet proper of sheet metal and providing two casings or shells spaced from each other that comparatively thin sheets of metal can be employed and at the same time protecting to a great degree the articles contained in the cabinet from fire, owing to the fact that the inner shell is spaced from the outer shell, thereby producing an air-chamber and preventing direct contact to the inner wall.

Having fully described my invention, what I claim as new, and desire to secure by Letters Patent, is—

The combination of inner and outer walls spaced from each other, and their front ends held in fixed spaced relation, the rear ends of the outer walls provided with portions extended beyond the rear ends of the inner walls, a rectangular back plate provided with flanges spaced from the edges of the back plate, and the extended portions of the outer walls seated between the edges of said back plate and its flanges, substantially as and for the purpose specified.

In testimony that I claim the above I have hereunto subscribed my name in the presence of two witnesses.

ANGUS McKENZIE.

Witnesses:
ALFRED L. McQUERN,
FRANK A. SCHWERTNER.