United States Patent [19]

Boiardi

[11] **3,906,591**

[45] **Sept. 23, 1975**

[54] **BRIDGING CLIP FOR METAL OR PLASTIC BANDING**

[75] Inventor: **Mario J. Boiardi,** Cleveland Heights, Ohio

[73] Assignee: **Boiardi Products Corporation,** New York, N.Y.

[22] Filed: **July 30, 1974**

[21] Appl. No.: **493,350**

[52] **U.S. Cl.** ..... **24/23 W;** 217/66; 206/83.5

[51] **Int. Cl.²** **B65D 63/06**

[58] **Field of Search** ..... 24/20–24, 81 CR; 206/83.5, 386; 217/66, 67; 403/395

[56] **References Cited**

UNITED STATES PATENTS

163,380 5/1975 Jordan ..... 24/23 B

Primary Examiner—Kenneth Downey

Attorney, Agent, or Firm—Sidney W. Millard

[57] **ABSTRACT**

A bridging clip for attachment to holding straps binding stacked loads for transportation by rail or truck. Such loads are often encompassed by metallic or plastic straps to hold the stack of goods in place and the clip in this case is mechanically attached to a vertically extending strap while supporting a horizontally extending strap in place to prevent its dislodgement upon settling of the load.

9 Claims, 6 Drawing Figures

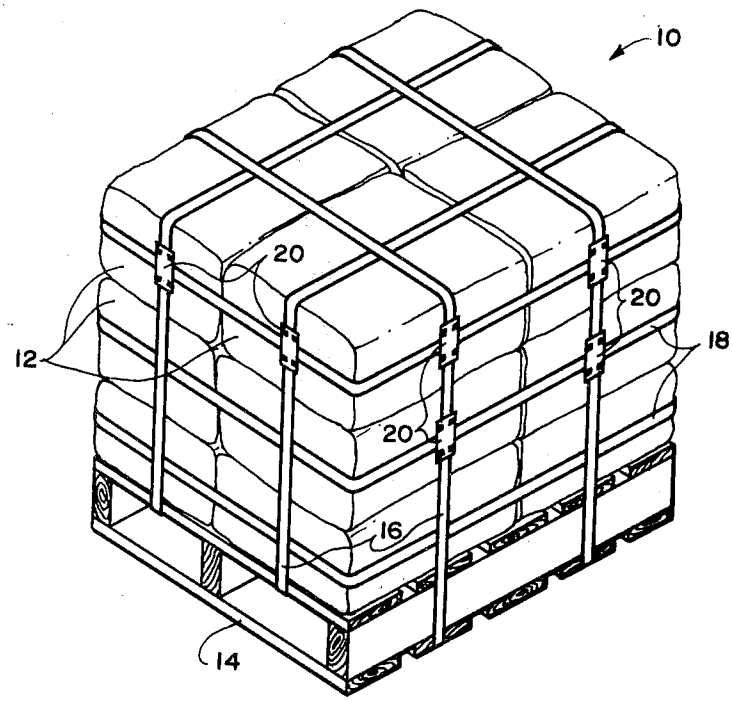

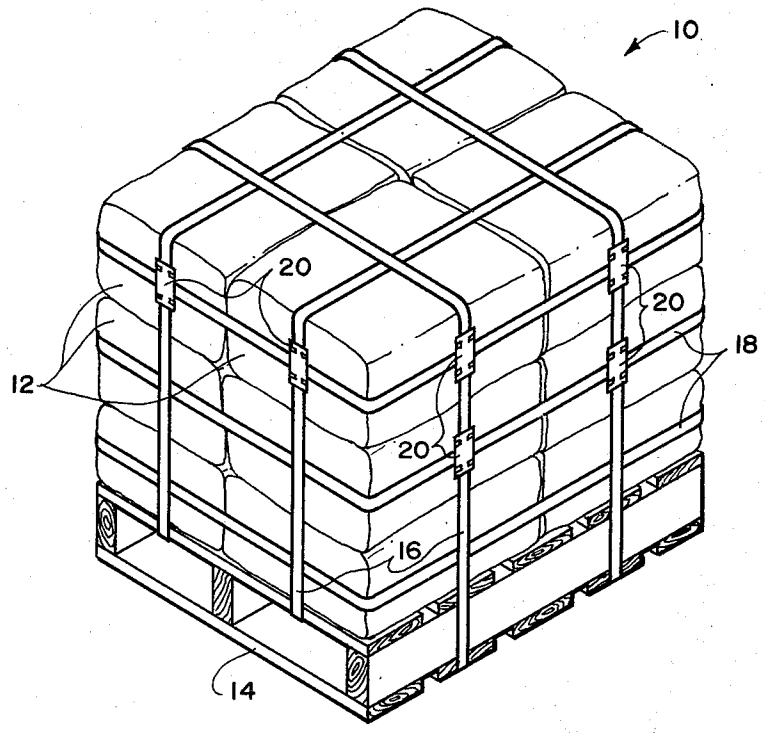

Fig. 1

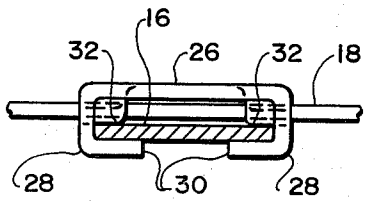

Fig. 2

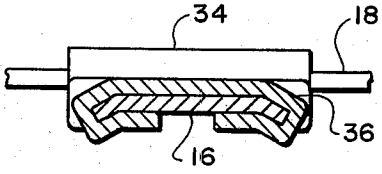

Fig. 3

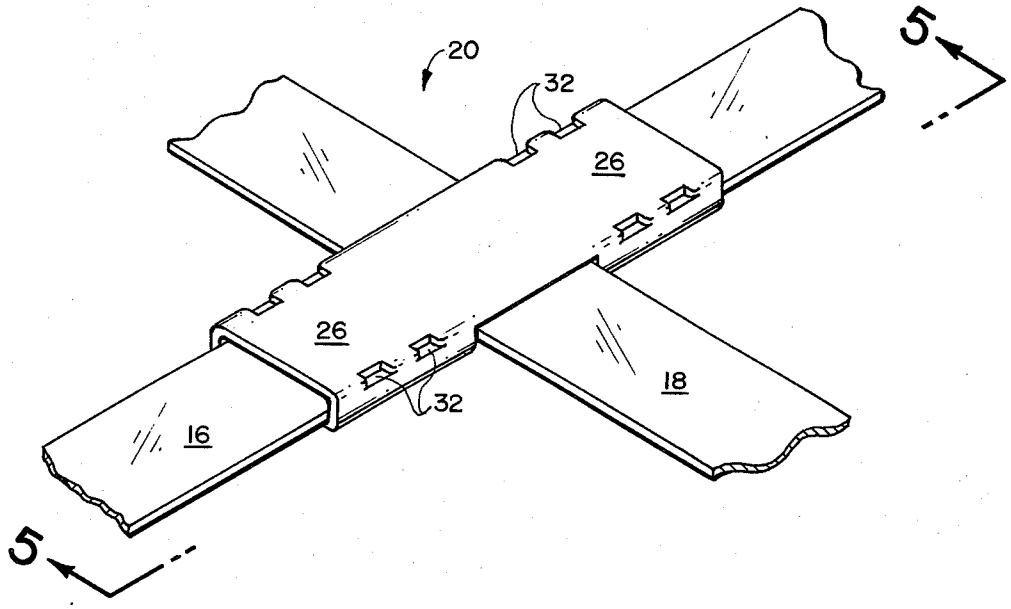

Fig. 4

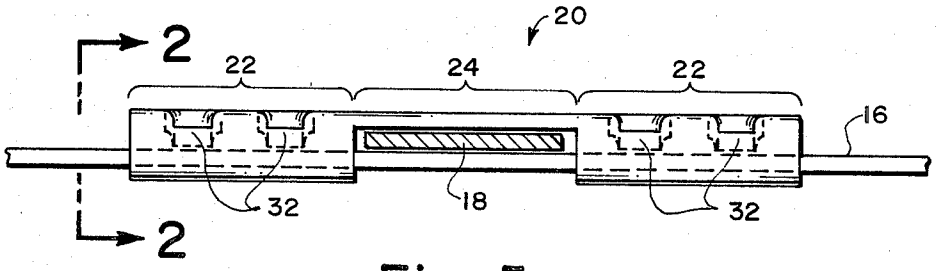

Fig. 5

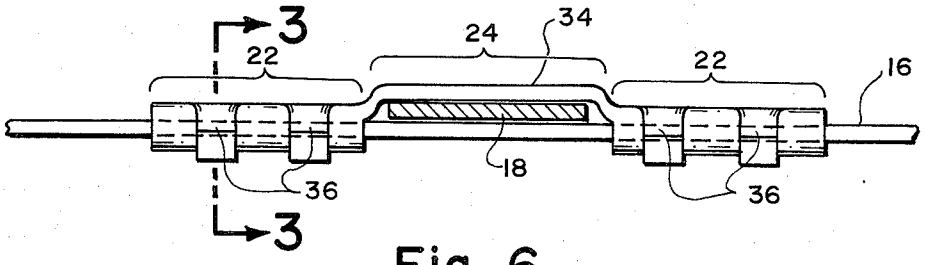

Fig. 6

BRIDGING CLIP FOR METAL OR PLASTIC BANDING

BACKGROUND OF THE INVENTION

Traditionally, boxes, packages, or stacks of material such as magazines, bags of grain, etc. are shipped by rail or truck and where the package does not have rigid sides to hold the goods in place the vibration of the trip tends to cause the goods to settle toward the bottom. Often the goods are loaded on a pallet suitable for lifting by a forklift type truck and to hold the stacked goods in place on the pallet, metal, plastic, or other types of binding straps are wrapped around the stack both in vertical and horizontal planes. The ends of these straps are traditionally held together by a buckle or seal which is crimped about the overlapped ends of the strap. In cross-section the conventional metal seal is generally of an elongated C-shape construction tightly clamping the strap ends. The straps are removed at the unloading site by cutting through the strap, after the forklift truck has removed the pallets and stacks to a storage location.

Vibrations during the transportation may cause the load to settle or shift if the goods themselves are not completely housed within a rigid unit. Thus, the straps are pulled particularly tight before the seal is applied to minimize the shift. However, this does not really solve the problem because a load will settle to some extent, regardless of precautions. Thus, it often occurs that the shifting will loosen one or more of the straps and allow it to slide to an inoperative position. For example, a strap lying generally in a horizontal plane might be allowed to shift downward (by gravity) and parts of the stack at the upper end might fall due to the lack of strap reinforcing.

Particular designs for strap seals are numerous in the art, but this invention is not directed to such structure. This invention is concerned with maintaining the numerous straps which may circumscribe the stack of goods in proper orientation to minimize excess shifting of the load during the transportation sequence. Occasional designs for such clip structure have been suggested and by way of example the patent to Ott, U.S. Pat. No. **1,738,921**, illustrates a combined positioning clip and box strap seal. The problem with the Ott structure is that its design defeats one of the needs of such a clip in that it is rigidly attached to both straps where they cross. This prevents relative movement between the two and cannot allow slight shifting and relative movement to accommodate unbalanced tensions within the straps.

BRIEF DESCRIPTION OF THE INVENTION

This invention comprises a bridging clip for attachment at the junction of two transversely extending straps which circumscribe a stack of goods to be transported by rail or truck and whose function it is to hold the two straps in generally permanent relative position circumscribing the stack of goods. In general appearance and shape the bridging clip of this invention, before it is deformed into operative combination with the straps, appears generally as an elongated standard box strap seal. In crosssection each end appears generally as a vertically elongated C with a flat, closed side. The clip consists of two identically shaped end portions joined together by a flat bridging section. The end sections are crimped onto a vertical strap or a tab is struck from the end sections in relatively conventional manner to attach the clip to the vertically extending strap. The bridging section extends over the horizontal strap which is sandwiched between the bridging section of the clip and the vertical strap and relative strap movement is possible.

BRIEF DESCRIPTION OF THE DRAWINGS

FIG. **1** is a perspective view of a stack of goods mounted on a pallet having metallic straps circumscribing said goods and held in operative position by the bridging clip of this invention.

FIG. **2** is a fragmentary sectional view taken along line **2—2** of FIG. **5.**

FIG. **3** is a sectional view taken along line **3—3** of FIG. **6.**

FIG. **4** is a perspective view of a bridging clip of this invention, said clip being affixed to one strap and holding the transversely extending strap in operative position.

FIG. **5** is an elevational view taken along line **5—5** of FIG. **4.**

FIG. **6** is an elevational view similar to FIG. **5** showing modifications of the structure of FIG. **5.**

DESCRIPTION OF THE PREFERRED EMBODIMENTS

FIG. **1** illustrates a typical packaged and strapped unit of goods for loading into a typical freight transportation environment. The unit **10** contains goods **12** stacked on a pallet **14** and initially held in rigid position by vertically extending straps **16** and horizontally extending straps **18.** Conventional seals to connect the ends of the straps together may be used but they have not been illustrated herein for the reason that they do not comprise a part of this invention.

It is recognized that the bridging clip disclosed herein could be used as a seal and one having ordinary skill in the art would be able to use the device in that manner without any instructions. However, that use is not a part of this invention. The description which follows will be limited to the novel aspects of the invention rather than the obvious non-inventive uses.

The bridging clips **20** illustrated in FIG. **1** are shown with more specificity in FIGS. **4** and **5.** The clip **20** will be used in one or more places on the unit **10** as needed for the purpose indicated. It will always be attached to the junction of a vertically extending strap **16** and a horizontally extending strap **18.**

The clip **20** includes two end sections **22** joined by a bridging section **24.** The end sections **22** are generally of a vertically elongated C-shape until it is slipped into place over the vertically extending strap and crimped into place as best illustrated in FIG. **2.** The crimping may take place in two operations or one depending upon the apparatus used but the following will happen generally in sequence. First the open C-shape having a generally flat portion **26** bounded on each side by transversely extending legs **28** which extend from the flat portion **26** toward and beyond the vertical strap **16.** The distal ends **30** of the leg portions **28** are deflected or crimped inward into contact with the inside surface of the vertically extending strap **16.** Next a deforming tool makes an indentation or dimple **32** in the flat surface **26** to mechanically connect the clip **20** and the vertically extending strap **16** to form a friction bond. The plastic deformation of the clip to form the dimple

32 may also form a slight depression in the strap itself to form a sort of lock, but in any case the particular type of tool to accomplish the desired purpose is not part of this invention and conventional equipment is used to do the crimping.

The depressions 32 made by the tool are greatly exaggerated in the drawings for conventional crimping tools and conventional crimping apparatus is used in many instances. However, in some specialized cases the depressions are preformed in the clip 20 with the depressions providing a bridge-like effect to allow horizontal strap 18 to move freely without any binding when the clip is crimped to vertical strap 16. When the dimples 32 are preformed the crimping tool will need to deform the dimples only slightly to get the desired friction lock.

As will be clear from an observation of FIGS. 4 and 5 the net result of the crimping operation described above will hold the strap 16 and the clip 20 in rigid mechanical position, but will allow the horizontal strap 18 to shift slightly or float within the clip itself which will serve to release tension which may build up in the strap as a result of a slightly shifting load. Note that the flat vertical surface of strap 18 in FIGS. 5 and 6 is shorter than the vertical length of the bridging section 24. The strap 18 is thus permitted to shift slightly one way or the other as the load may shift to minimize tension stress concentration which may result. As will be clear, tension stress in horizontal strap 18 will tend to cause a shear force on vertically extending strap 16. Flat metal straps as designed for this type of work are intended to serve their purpose in a tension capacity rather than a shear capacity and thus the floating aspect of the strap 18 allows the vertically extending straps to function in their intended manner, namely, to hold the stacked goods in place. Similarly the strap 18 will serve also in a strictly limited tension capacity as the load may shift and bulge from time to time at one horizontal strap or the other. The clip being attached in place as it is, will prevent the horizontally extending strap 18 from shifting downwardly by gravity out of position should the initial tension in one of the upper horizontal straps be lessened during the settling sequence.

FIGS. 3 and 6 illustrate a set of modifications which might be incorporated into the clip of FIGS. 4 and 5 as desired. The first modification which will be observed is that in FIG. 5 the outer surfaces of the end portions 22 and bridging portion 24 all lie in one plane, whereas in FIG. 6 the end portions 22 lie in one plane while the outer surface 34 of the bridging portion 24 is vertically offset. One purpose of this offset is to allow a crimping of the clip to the strap 16 with less deformation than is shown at 32 in FIG. 3.

An alternative mechanical attachment is also illustrated in FIGS. 3 and 6 and it consists of forming tabs 36 which are struck from the clip in a conventional manner. The usual result is to have the clip and strap cut a slight amount and the resulting tab 36 formed is deflected out of the plane in which it normally lies to provide a mechanical lock to prevent relative slippage between the clip 20 and the strap 16.

No particular preference is alleged for any particular combination of elements in the embodiments illustrated. Functionally, it is largely immaterial whether the clip is crimped (FIG. 5) or a tab is struck from the clip to form the mechanical lock (FIG. 6). Each technique has its own advantages and disadvantages well known in the art. Each will work under the proper circumstances. Similarly there is no particular preference on whether the clip is formed with a completely planer outer surface (FIG. 5) or whether there is a vertical deflection of the bridging section of the clip (FIG. 6). Each will work adequately.

While the bridging clip has been described and will be claimed hereafter in the limited capacity of a clip attached to a vertical strap and holding a horizontal strap in place, it will be clear to those having ordinary skill in the art that the clip could be used with equal effectiveness on the top of a bundle of goods where the two sets of vertically extending straps cross. This would prevent sideward shifting of the straps upon loosening by load shift. This is an obvious equivalent and needs no explanation.

I claim:

1. A bridging clip attached at the junction of two transversely oriented and circumferentially extending straps,

the straps extending around the periphery of a stack of goods prepared for shipping, one of said straps comprising a vertical strap lying in a vertical plane and the other comprising a horizontal strap lying in a horizontal plane,

said clip including vertically aligned end sections, said end sections being joined by an intermediate bridging section,

each said end section including two opposed leg portions spanned by a flat portion, one said leg portion being on each side of each flat portion and extending from said flat portion toward and beyond the vertical strap, the distal end of each leg portion being deflected to extend toward its opposed leg portion, whereby, in cross-section the vertical strap is sandwiched between each said flat portion and the deflected portions of said legs,

the clip being rigidly mechanically attached to the vertical strap by a deformation of an end section of said clip, there being no mechanical attachment of the clip to the horizontal strap,

the bridging section lying parallel to a vertical surface of the horizontal strap and extending both above and below said horizontal strap with the bridging section joining the two end sections where one end section is below the horizontal strap and the other end section is above the horizontal strap, said horizontal strap lying between the bridging section and the vertical strap, the vertical spacing between the end sections being greater than the heighth of said vertical surface thereby allowing relative movement between said straps to relieve unbalanced tensions without allowing the horizontal strap to move vertically any substantial distance.

2. The bridging clip of claim 1 wherein the deformation comprises plastically deformed indentations in the end sections to compress the vertical strap between a flat portion and a deflected portion of the leg.

3. The bridging clip of claim 2 wherein the outer surfaces of the flat portions of the end sections and the outer surface of the bridging section lie in the same plane.

4. The bridging clip of claim 2 wherein the outer surfaces of the flat portions of the end sections lie in a different plane than the outer surface of the bridging section.

5. The bridging clip of claim 1 wherein outer surfaces of the flat portions of the end sections and the outer surface of the bridging section lie in the same plane.

6. The bridging clip of claim 1 wherein the outer surfaces of the flat portions of the end sections lie in a different plane than the outer surface.

7. The bridging clip of claim 1 wherein the deformation comprises tabs formed by cutting through a flat portion, the vertical strap and a leg portion, said tabs being deformed into different planes to mechanically lock the clip and vertical strap together.

8. The bridging clip of claim 7 wherein the outer surfaces of the flat portions of the end sections and the outer surface of the bridging section lie in the same plane.

9. The bridging clip of claim 7 wherein the outer surfaces of the flat portions of the end sections lie in a different plane than the outer surface of the bridging section.

* * * * *