June 5, 1945. H. H. SMITH 2,377,583

STEPPING MECHANISM

Filed Nov. 27, 1942 2 Sheets-Sheet 1

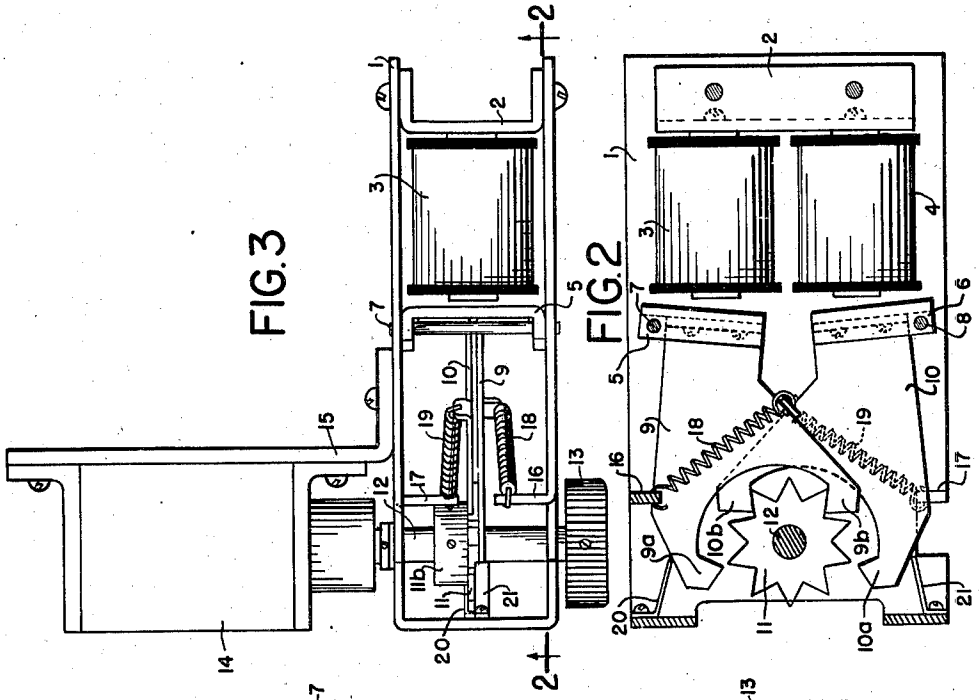

FIG. 3

FIG. 2

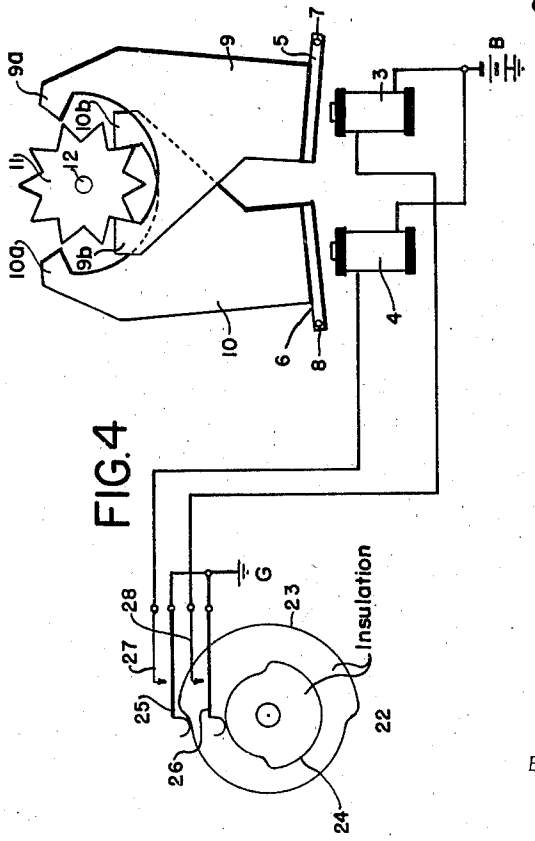

FIG. 4

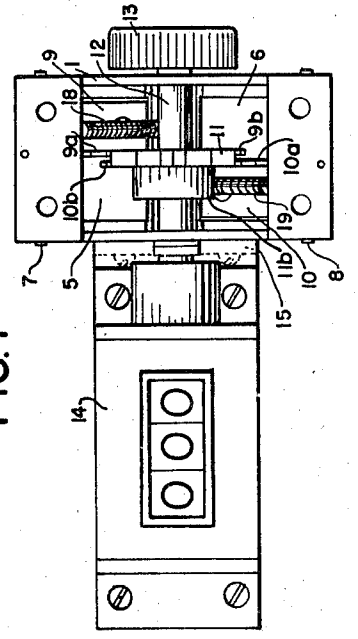

FIG. 1

INVENTOR.
HOWARD H. SMITH

BY

ATTORNEY

June 5, 1945. H. H. SMITH 2,377,583

STEPPING MECHANISM

Filed Nov. 27, 1942 2 Sheets-Sheet 2

FIG.5C

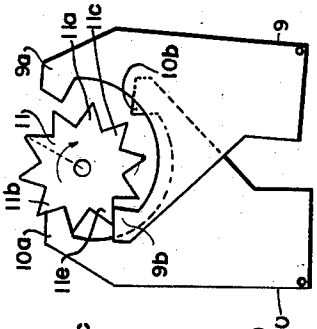

FIG.5B

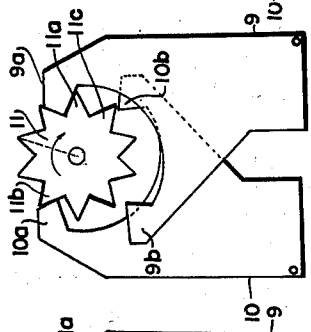

FIG.5A

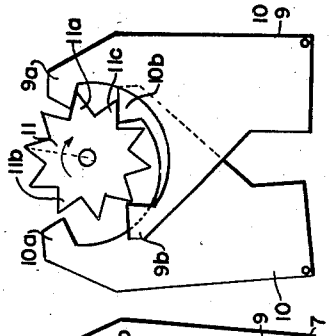

FIG.5

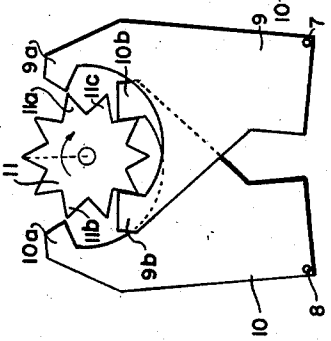

FIG.6C

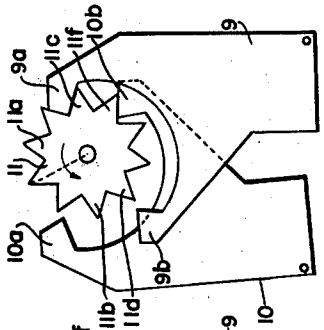

FIG.6B

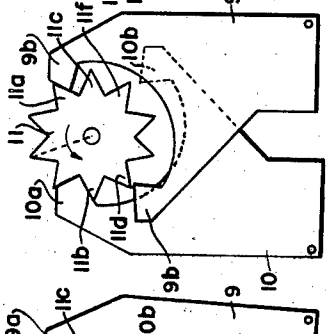

FIG.6A

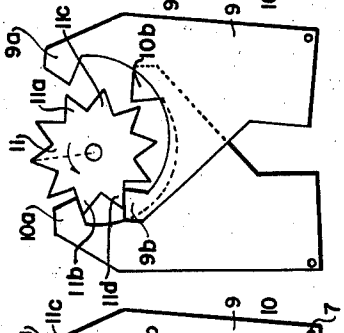

FIG.6

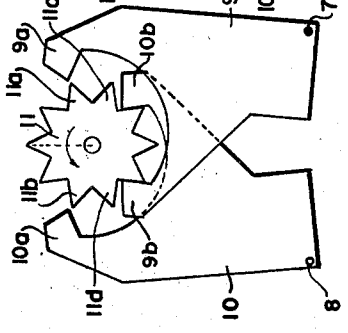

INVENTOR.
HOWARD H. SMITH

BY

ATTORNEY

Patented June 5, 1945 2,377,583

UNITED STATES PATENT OFFICE

2,377,583

STEPPING MECHANISM

Howard Hill Smith, Chicago, Ill., assignor to Automatic Electric Laboratories, Inc., Chicago, Ill., a corporation of Delaware

Application November 27, 1942, Serial No. 467,159

13 Claims. (Cl. 74—126)

My invention relates in general to an improved stepping mechanism and more specifically to a novel electromagnetically operated ratchet drive for rotating a shaft either in a forward or backward direction at will.

Devices have been designed for driving a shaft in either direction by means of a motor or by means of two separate magnetically operated ratchet drives which operate independently to rotate a shaft in either direction. In the present design a pair of electromagnetically operated ratchets are caused to jointly control a single ratchet wheel in such a manner that the direction of rotation of the wheel and its shaft is determined by the sequence of operation of the two magnets. The mechanism as shown may be manually controlled or remotely controlled from a rotating cam attached to any rotating device.

In many instances it becomes necessary to cause a distant shaft to be controlled over electric circuits to cause it to follow rotations of a near shaft in either direction. This becomes necessary in many arts such as remote control of radio sets, remote control of radio antenna for airplanes, and many other arts. Such a control may be utilized to cause either operation of a remote driving element or to give a remote indication of the rotations of a driving element.

It is an object of the present invention, therefore, to provide a simple ratchet drive stepping mechanism which may be accurately controlled over an electric circuit to cause its movement in either direction.

In order to accomplish this object I have provided the shaft with a single ratchet wheel and a pair of ratchets operating on the same wheel. The magnets for controlling the two ratchets are controlled in different sequences over an electric circuit from a cam or the like to cause rotation of the ratchet driven shaft in either clockwise or counterclockwise direction dependent on the sequence of operation of the two magnets.

In the drawings

Fig. 1 is a front view of the stepping mechanism;

Fig. 2 is a view taken from the right side of Fig. 1 with the side plate broken away;

Fig. 3 is a top view of Fig. 2 with the complete plate shown, the point at which the side plate of Fig. 3 has been broken away in Fig. 2 is indicated by line 2—2 in Fig. 3;

Fig. 4 is a circuit showing the control of the operating magnets by a cam with the mechanism shown in schematic form.

Figs. 5, 5A, 5B and 5C are views showing the successive steps of the ratchet wheel and shaft in one sequence of operation of the magnets to move the wheel clockwise.

Figs. 6, 6A, 6B and 6C are views showing the successive steps of the ratchet wheel in another sequence of operation of the magnets to move the wheel counterclockwise.

Referring now to Figs. 1, 2 and 3, it will be seen that the mechanism comprises a U-shaped mounting bracket 1 which supports the entire mechanism. At the open end of bracket 1 is mounted another smaller U-shaped bracket 2 which is secured to bracket 1 by screws on each side as shown in Fig. 3, and to which the magnets 3 and 4 are secured as shown. The armatures 5 and 6 of magnets 3 and 4 respectively are pivoted as shown on the pins 7 and 8 which project through the opposite sides of bracket 1 and are riveted on their ends to hold them in place.

A double-toothed pawl 9 is secured as shown to the armature 5 by means of screws shown in Fig. 2 and a similar pawl 10 is secured to armature 6 as shown. Each of the pawls 9 and 10 have opposed teeth 9a and 9b, and 10a and 10b on opposite sides of the star ratchet wheel 11. The star wheel 11 has a hub 11b on one side thereof by means of which it is rigidly secured by a set screw (Fig. 3) to a shaft 12. The shaft 12 has bearings in the side plates of bracket 1 and carries at one end the reset thumb nut 13 also rigid with the shaft. The opposite end of shaft 12 is shown as linked to the operating shaft of a so-called "Veeder" counter indicated generally at 14 which is mounted as shown in Fig. 3 on a side bracket 15 which is in turn secured to the side plate of bracket 1. A pair of lugs 16 and 17 are cut out from and bent inward from the sides of bracket 1 and have holes therein so that each acts as an anchor for one end of retracting springs 18 and 19 the other ends of which are fastened to small lugs on pawls 9 and 10 to hold said pawls in normally retracted position as shown in Fig. 2. In addition adjustable back stops 20 and 21 are shown secured by screws to the front end of bracket 1 and may be bent forward or backward to adjust the stroke of the armatures 9 and 10. As shown in Fig. 1 the front end of U-shaped bracket 1 has a cut out section in the center thereof and has threaded holes in the two straps on each side of the opening by means of which the whole unit may be fastened to any desired support. It will be noted that the star wheel 11 is more than twice as thick as the two pawls 9 and 10 and that the pawls are arranged

side by side, both in operative relation with the star wheel 11.

Referring now to Fig. 4, I have shown one form of circuit by means for which the magnets 3 and 4 may be operated in different sequences to rotate star wheel 11 and consequently shaft 12 in either clockwise or counterclockwise direction. At 22 I have shown a cam of insulating material which may be either rotated by hand or secured to a rotatable shaft of any desired form. The cam 22 has two cam faces 23 and 24 which function as the cam is rotated to raise and lower the main springs 25 and 26 into and out of engagement with the springs 27 and 28.

When the cam 22 is rotated clockwise the springs 26 and 28 are first closed by cam face 24 to energize magnet 3, then while these springs remain closed the springs 25 and 27 are closed by cam face 23 to energize magnet 4. As the cam 22 rotates further the springs 26 and 28 are first opened to deenergize magnet 3 and later the springs 25 and 27 are opened to deenergize magnet 4. This results in a clockwise movement of wheel 11 and shaft 12 one tenth of one revolution as will be more fully explained.

Now when cam 22 is rotated counterclockwise springs 25 and 27 are first closed to energize magnet 4, then springs 26 and 28 are closed to energize magnet 3, then springs 25 and 27 are opened to deenergize magnet 4 and springs 26 and 28 are later opened to deenergize magnet 3. This latter cycle causes rotation of wheel 11 and shaft 12 one tenth of a revolution counterclockwise.

In order to clearly explain the different directions of movement of wheel 11 under the above two conditions, I have shown in Figs. 5, 5A, 5B, and 5C the steps of operation of wheel 11 when cam 22 is rotated clockwise. Fig. 5 shows all parts at normal with teeth 9*a* and 10*a* of the pawls in position to engage the upper sides of teeth 11*a* and 11*b* and with teeth 9*b* and 10*b* both held tightly against the sides of the teeth of wheel 11 as shown by means of the tension of springs 18 and 19 (Fig. 2). On the first step; namely, when springs 26 and 28 close and magnet 3 energizes, the armature 5 is attracted to move pawl 9, which as shown in Fig. 5A engages the upper side of tooth 11*a* to rotate the wheel to the position shown with tooth 11*c* of wheel 11 engaging the upper edge of the tooth 10*b* of pawl 10. On the next operation, as pointed out, the springs 25 and 27 (Fig. 4) cause energization of magnet 4 and consequent attraction of armature 6 to move pawl 10 to the position shown in Fig. 5B. This movement draws the tooth 10*b* downward slightly at the same time that tooth 10*a* engages, in this case, the under side of tooth 11*b* of wheel 11 and thereby causes a still farther rotation (clockwise) of wheel 11 and permits tooth 9*a* to also move completely into the tooth of wheel 11 as shown. The next step in this sequence of operations occurs when springs 26 and 28 are opened (Fig. 4) to cause deenergization of magnet 3, and consequent retraction of its armature 9, by its spring 18 to the position shown in Fig. 5C. As pawl 9 moves to this position pawl tooth 9*b* engages the under side of tooth 11*e*, pawl tooth 9*a* moves out of the teeth of wheel 11, and as magnet 4 is still energized, the wheel 11 rotates a still further amount clockwise so that tooth 10*a* now fully enters its engaged tooth of wheel 11 as shown in Fig. 5C. At the next step in this sequence cam 22 (Fig. 4) opens springs 27 and 28 to cause deenergization of magnet 4 to allow retraction of pawl 10 by its spring 19.

As pawl 10 is retracted the tooth 10*b* of pawl 10 engages the right hand side of tooth 11*c* as seen in Fig. 5C and tooth 10*a* is withdrawn from the teeth of wheel 11 so that the wheel is moved still farther clockwise. The pawls 9 and 10 will now again assume the positions shown in Fig. 5 except that wheel 11 has now completed one sequence of operations and moved one tenth of a revolution with tooth 11*a* in the position shown by tooth 11*c* in Fig. 5. It will be noticed that this sequence of operations of magnets 3 and 4 for clockwise rotation started with the energy of magnet 3.

Now if cam 22 (Fig. 4) is moved counterclockwise a similar sequence occurs except that magnet 4 is first energized and the steps in this sequence of operations are shown in Figs. 6, 6A, 6B and 6C. Fig. 6 again shows normal positions of pawls 9 and 10 so that when cam 22 closes springs 25 and 27 and energizes magnet 4 the pawl 10 moves first to engage the upper edge of tooth 11*b* to move wheel 11 to the position shown in Fig. 6A with the lower side of tooth 11*d* against the upper edge of pawl tooth 9*b*. On the next step when springs 26 and 28 close and magnet 3 energizes the pawl 9 moves forward to the position shown in Fig. 6B to cause tooth 9*a* to engage the under side of tooth 11*a* and to withdraw tooth 9*b* from under tooth 11*d* so that wheel 11 moves counterclockwise and tooth 10*a* now completely fills the tooth opening which it engages. Cam 22 (Fig. 4) now enters its next stage to open springs 25 and 27 to deenergize magnet 4 to permit retraction of pawl 10 by its power spring 19. This movement withdraws tooth 10*a* from the wheel and causes tooth 10*b* to engage the under side of tooth 11*f* to rotate wheel 11 still further counterclockwise with tooth 9*a* now completely filling its engaged tooth as shown in Fig. 6C. The next step, namely, the opening of springs 26 and 28 and consequent deenergization of magnet 3 causes pawl 9 to be moved to the right about its pivot from the position shown in Fig. 6C so that tooth 9*b* engages the under side of tooth 11*d* as tooth 9*a* is withdrawn from wheel 11 to cause further counterclockwise movement of wheel 11 to the position shown by the pawls in Fig. 6 except that one tenth revolution has been completed and tooth 11*c* now stands in the position shown in Fig. 6 by tooth 11*a*.

It will be seen that further rotation of cam 22 (Fig. 4) causes like rotations of wheel 11 in the same manner. That wheel 11 always has a direction of movement in the same direction as cam 22 and that as shown one revolution of cam 22 causes one tenth of one revolution of shaft 12.

It will be further understood that many adaptations of this arrangement are possible and that various gear ratios may be introduced as desired. For instance the shaft 12 instead of operating a visual indicator or counter, as shown, may be geared or directly connected to the tuning elements of a radio or to means for reeling in or out a radio antenna of an airplane and that in this case cam 22 would be manually controlled from the tuning dials of the radio or from other manual control means. Also the cam 22 may be geared to or connected to a remote operating shaft of any device and be utilized to control any type of rotary visual dial or indicator at the near point by means of magnets 3 and 4 to give a continuous indication of the position of the remote device.

Having fully described the features and

aspects of my invention, what I consider to be new and novel and desire to protect by Letters Patent will be pointed out in the appended claims.

I claim:

1. In a stepping mechanism, a shaft, a pair of electromagnetically operated ratchet mechanisms for rotating said shaft, means for alternately operating said ratchet mechanisms, said mechanisms so adjusted that the alternate operation thereof causes rotation of the shaft in one direction, the direction in which the shaft is rotated being determined by the sequence of operation of the mechanisms.

2. In a rotating mechanism, a rotatable element, a series of ratchet teeth on the element, a pair of pawls cooperating with said teeth, means for operating said pawls alternately in different sequences, said pawls so aligned with said teeth that each alternate operation of the pawls causes rotation of the element in one direction, the direction of rotation of said element determined by the sequence of operation of the pawls.

3. In a stepping mechanism, a ratchet wheel, a pair of pawls, means for operating said pawls to engage the teeth of said wheel to rotate the same, said pawls so mounted relative said wheel that the wheel is moved in one direction by initial operation of one pawl and subsequent operation of the other pawl, and moved in the other direction by initial operation of said other pawl and subsequent operation of said one pawl.

4. In a stepping mechanism wherein a pair of pawls engage the teeth of a single ratchet wheel, means for operating the pawls in one order, and for operating said pawls in the reverse order, said pawls so mounted relative to the wheel that the operation thereof in one order is effective to move the wheel in one direction and the operation of the pawls in the reverse order is effective to move the wheel in another direction.

5. In a stepping mechanism a ratchet wheel and a pair of pawls therefor, means for alternately operating said pawls to cause rotation of the wheel, said pawls so aligned with the teeth of said wheel that operation of one pawl before the other causes rotation of the wheel in one direction while operation of said one pawl after the initial operation of the other pawl causes rotation of the wheel in the other direction.

6. In a stepping mechanism, a ratchet wheel, a pair of pawls each having a pair of teeth alternately cooperating with the teeth of the wheel, means for operating the pawls one after the other to first cause engagement of one tooth and then the other of each pawl with said wheel to move the wheel, each attraction and retraction of each pawl causing progressive movement of the wheel in one direction.

7. In a ratchet driven mechanism, a pair of electromagnets, a pawl operated by each magnet and a ratchet wheel controlled by both pawls, means for causing overlapping energization and deenergization of said magnets to progressively move the wheel in one direction, said pawls so aligned with said wheel that the direction of movement of the wheel is determined by which magnet is first energized.

8. In a ratchet drive mechanism, a ratchet wheel, a pair of pawls engaging the teeth of said wheel to rotate the same, a magnet for operating each pawl, means for alternately energizing and deenergizing said magnets to cause both pawls to cooperate to rotate said wheel in one direction, each pawl so positioned relative to the teeth of said wheel that each energization and each deenergization of each magnet causes its pawl to partially rotate said wheel.

9. A ratchet drive mechanism as claimed in claim 8 wherein the direction of rotation of said wheel is determined by the initial energization of a different one of said magnets.

10. In a ratchet drive mechanism, a star wheel, a pair of double toothed pawls cooperating with the teeth of said wheel to drive the same, means whereby the initial operation of one pawl causes one of its teeth to move the wheel in one direction and the initial operation of the other pawl causes one of its teeth to move the wheel in another direction, the teeth of each pawl so positioned relative said wheel that a subsequent operation of either pawl after operation of the other pawl causes movement of the wheel thereby to be reversed over that caused by its intial operation.

11. In a stepping mechanism, a shaft, a pair of operating magnets, pawls operated by each magnet for stepping said shaft, means for energizing said magnets in different sequences to cause stepping of the shaft, said pawls so positioned that the direction of movement of the shaft by each pawl is determined by the sequence of operation of the magnets, and that each energization of a magnet and each deenergization thereof causes a movement of said shaft by its pawl.

12. In a stepping mechanism, a star wheel, a pair of pawls cooperating therewith, a pair of opposed ratchet teeth for each pawl, means for attracting and retracting said pawls, each attraction of a pawl causing movement of the wheel by means of one tooth of the pawl, each retraction of a pawl also causing movement of the wheel by means of the other tooth thereof.

13. A stepping movement such as claimed in claim 12 wherein the said pawls cooperate to control the wheel to step the same in either direction, and wherein the direction of movement of the wheel is determined by which pawl is initially attracted.

HOWARD H. SMITH.