F. W. WINKLER, Jr.

COLLAPSIBLE TRUNK, BOX, CRATE, AND THE LIKE.

APPLICATION FILED JUNE 28, 1915.

1,184,156.

Patented May 23, 1916.

2 SHEETS—SHEET 1.

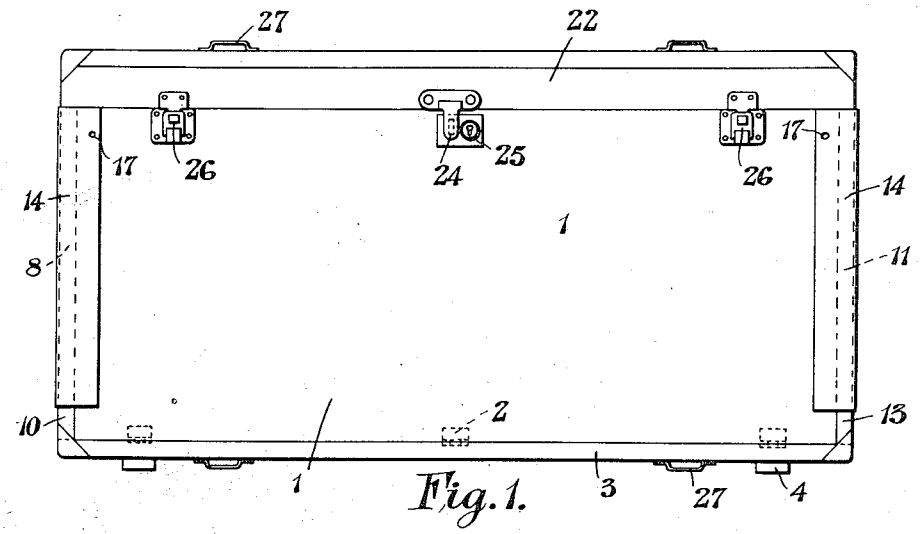

Fig. 1.

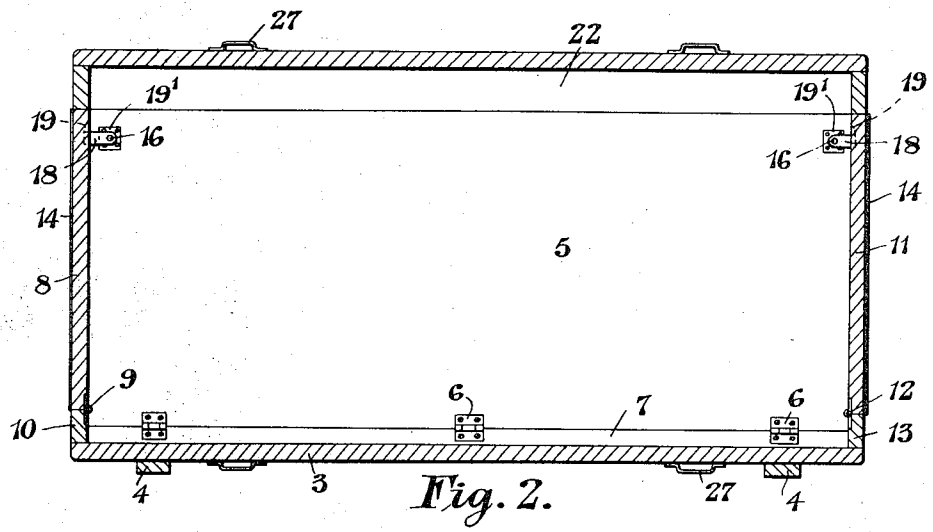

Fig. 2.

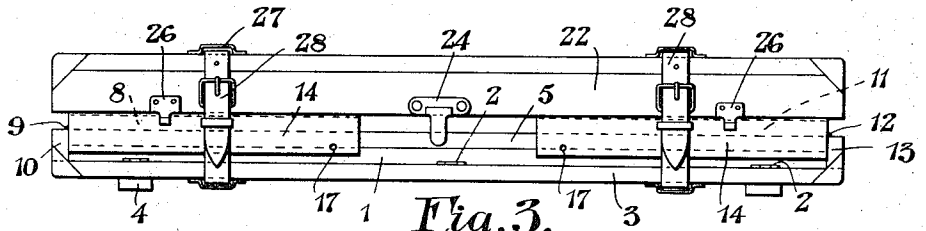

Fig. 3.

Frederick William Winkler

Leon Spring

Frederick William Winkler

Inventor

F. W. WINKLER, Jr.

COLLAPSIBLE TRUNK, BOX, CRATE, AND THE LIKE.

APPLICATION FILED JUNE 28, 1915.

1,184,156.

Patented May 23, 1916.

2 SHEETS—SHEET 2.

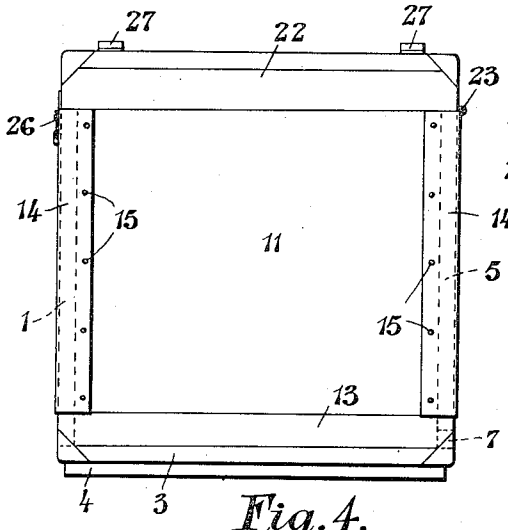

Fig. 4.

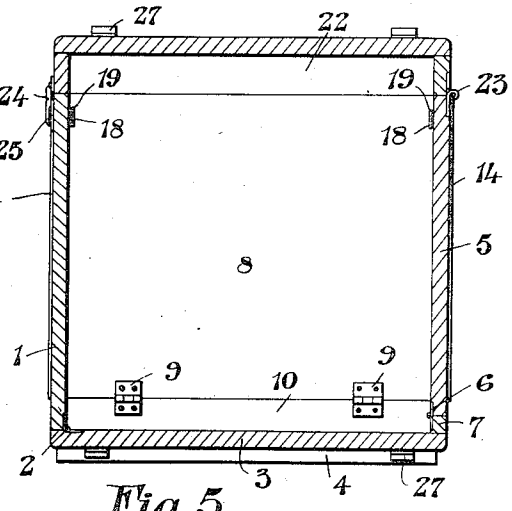

Fig. 5.

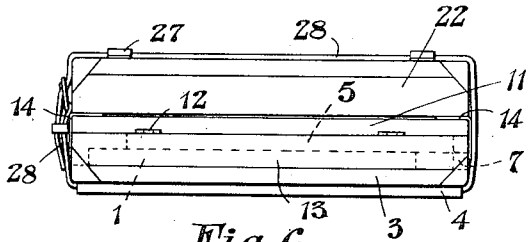

Fig. 6.

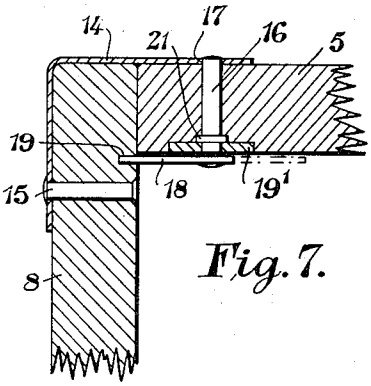

Fig. 7.

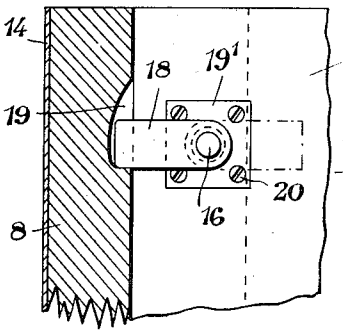

Fig. 8.

Frederick William Winkler

Leon Spurr

Frederick William Winkler Jr.

Inventor

UNITED STATES PATENT OFFICE.

FREDERICK WILLIAM WINKLER, JR., OF BROOKLYN, NEW YORK.

COLLAPSIBLE TRUNK, BOX, CRATE, AND THE LIKE.

1,184,156. Specification of Letters Patent. Patented May 23, 1916.

Application filed June 28, 1915. Serial No. 36,707.

To all whom it may concern:

Be it known that I, FREDERICK WILLIAM WINKLER, Jr., citizen of the United States, residing at 122 Cooper street, Brooklyn, in the county of Kings and State of New York, have invented certain new and useful Improvements in Collapsible Trunks, Boxes, Crates, and the like, of which the following is a specification.

This invention relates to a collapsible or foldable trunk, box, crate or the like, for use in shipping merchandise, packages or articles, and which when not in use may be packed or folded into a small space for shipment or for storage.

The object of the invention is to provide improved means for rigidly and firmly holding the members of the box in open or unfolded positions, and to this end the invention consists in the novel construction, arrangement and combination of parts hereinafter more particularly described and illustrated, and clearly pointed out in the appended claims.

In the accompanying drawings, I have illustrated one convenient embodiment of the invention as applied to a trunk or box, but it will be understood that the invention is equally applicable to crates or the like, having the sides thereof formed of spaced slats or boards.

In these drawings: Figure 1 is a front view of a trunk or box constructed in accordance with the invention, in open or unfolded condition, Fig. 2 is a longitudinal sectional view thereof, Fig. 3 is a front view of the trunk or box in collapsed or folded condition, Fig. 4 is an end view of the trunk or box in open or unfolded condition, Fig. 5 is a transverse sectional view thereof, Fig. 6 is an end view of the trunk or box in collapsed or folded condition, Fig. 7 is a detail plan view of the means employed for holding the members of the trunk or box in open condition, and Fig. 8 is a front view of the means shown in Fig. 7.

The front wall 1 of the trunk is hinged at 2 to the bottom 3 which may be provided with battens or slats 4 if desired, and the back wall 5 is hinged at 6 to a bar or rail 7 secured by screws or other securing means to the bottom 3. The bar or rail 7 is of a height substantially the same as the thickness of the front wall 1, so that the latter may be folded about the hinges 2 to lie upon the bottom 3, and the back wall 5 may then be folded about the hinges 6, to lie upon the folded front wall 1, as clearly shown in Fig. 6.

The left hand side wall 8 of the trunk is hinged at 9 to a bar or rail 10, secured to the bottom 3 by screws or other securing means, the bar 10 being of a height substantially the same as the combined thicknesses of the front and back walls 1 and 5, so that the wall 8 may be folded about the hinges 9 to lie upon the folded walls 1 and 5. The right hand side wall 11 is similarly hinged at 12 to a bar or rail 13, of the same height as the bar 10, and when folded lies upon the folded walls 1 and 5.

The front and back walls 1 and 5 are of such length that in unfolded positions they lie between the walls 8 and 11, Figs. 1 and 7, and in folded positions they lie between the bars or rails 10 and 13, Fig. 3. The side walls 8 and 11 are of a width equal to that of the bottom 3 as shown in Figs. 4 and 6.

The side walls 8 and 11 are provided at their front and rear edges with plates 14, Fig. 7, which are preferably of right-angular cross-section as shown, and are secured to said walls by suitable securing means, such as rivets 15. The plates 14 on the front edges of the walls 8 and 11, and those on the rear edges thereof, respectively extend toward each other beyond the said walls, as shown in Fig. 7, so that when the front, back and side walls are in open or unfolded positions, the walls 1 and 5 engage the plates 14, and are thereby prevented from further outward movement.

The front and back walls 1 and 5 are provided adjacent the side edges thereof, with pins 16 which extend through said walls and project beyond the front and back faces thereof respectively. Said pins, when the walls are in open or unfolded positions enter apertures 17 in the plates 14 and thus hold the side walls 8 and 11 against further outward movement. The side walls are, of course, prevented from inward movement by engagement with the side edges of the front and back walls.

On the inner ends of the pins 16 are pivotally arranged catches 18, which are adapted when the walls are in open or unfolded positions to be turned to enter slots or recesses 19 formed in the side walls 8 and 11. The engagement of the catches 18 with the walls of the recesses 19 prevents movement of the walls 1 and 5 inwardly or into folded posi-

tions. The catches 18 occupy the position indicated in dotted lines in Fig. 8, when the walls are folded or to be folded.

The pins 16 are preferably carried by plates 19′ secured by screws 20 to the walls 1 and 5, collars 21 preventing movement of the pins inwardly relatively to the plates, and the riveted over ends of the pins preventing movement thereof outwardly. I have shown one pin 16 and catch 18 at each side edge of each wall 1 and 5, but it will be understood that more than one pin and catch may be provided at each side edge of said walls if desired.

A top or lid 22 is provided and is hingedly attached to the back wall 5 by hinges 23, which preferably are open hinges in order that the lid can be readily attached to and detached from the back wall as desired. The lid 22, when closed is secured to the front wall 1 by a hasp 24 and lock 25, but any other form of securing means, such as a hasp and padlock may be employed. Ordinary trunk catches 26, having coöperating parts on the lid 22 and wall 1 may also be used.

The bottom 3 and lid 22, are provided with retainers 27, through which straps 28 are passed in order to hold the parts in folded position, as shown in Fig. 3. If desired, the bottom 3 might be provided with a duplicate set of hinges, similar to hinges 23, and with a duplicate lock, similar to lock 25, so that the lid could be hinged and locked to the bottom 3 to hold the parts in folded positions.

It will readily be seen that with the construction described the walls of the trunk, box or the like will be rigidly and firmly held in open or unfolded position, and that the walls may be folded, or unfolded and secured together with great ease and quickness. Further, there are only a few simple and easily assembled parts required and there are no loose parts to become misplaced or lost.

I claim:—

1. A collapsible trunk, comprising in combination, a bottom member, side walls hingedly mounted on said bottom member and foldable inwardly, plates secured at the side edges of certain of said side walls and engaged by the remaining side walls, said plates having apertures therein, pins carried by the last mentioned side walls and extending on both sides thereof, the outer ends of said pins engaging the apertures in said plates, and catches pivoted on the inner ends of said pins for preventing inward movement of the last mentioned side walls.

2. A collapsible trunk, comprising in combination, a bottom member, side walls hingedly mounted on said bottom member and foldable inwardly, plates secured at the side edges of certain of said side walls and engaged by the remaining side walls, said plates having apertures therein, plates secured to the last mentioned side walls on the interior surfaces thereof, pins carried by said plates, extending on both sides of said side walls and engaging at their outer ends in the apertures in the first mentioned plates, means on said pins for preventing inward movement thereof, and catches on the inner ends of the pins for preventing inward movement of the last mentioned side walls.

3. A collapsible trunk, comprising in combination, a bottom member, side walls hingedly mounted on said bottom member and foldable inwardly, pins carried by certain of said side walls and extending on both sides thereof, means carried by the remaining side walls coacting with the outer ends of said pins to hold the last mentioned side walls in position, and means on the inner ends of said pins for preventing inward movement of the first mentioned side walls.

4. A collapsible trunk, comprising in combination, a bottom member, side walls hingedly mounted on said bottom member and foldable inwardly, pins carried by certain of said side walls and extending on both sides thereof, means carried by the remaining side walls coacting with the outer ends of said pins to hold the last mentioned side walls in position, and catches pivoted on the inner ends of said pins for preventing inward movement of the first mentioned side walls.

5. A collapsible trunk, comprising in combination, a bottom member, side walls hingedly mounted on said bottom member, and foldable inwardly, plates secured on the inner surfaces of certain of said side walls, pins carried by said plates and extending on both sides of said side walls, means carried by the remaining side walls coacting with the outer ends of said pins to hold the last mentioned side walls in position, means on said pins for preventing inward movement thereof, and catches pivoted on the inner ends of said pins for preventing inward movement of the first mentioned side walls.

In testimony whereof I affix my signature in presence of two witnesses.

FREDERICK WILLIAM WINKLER, JR.

Witnesses:
FREDERICK WILLIAM WINKLER,
LEON SPRINZ.