July 21, 1959 R. H. KOENIG 2,896,042

TAPE SWITCH

Filed March 3, 1958

FIG 1

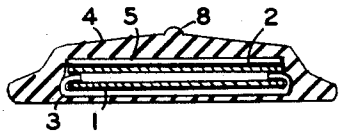

FIG 2

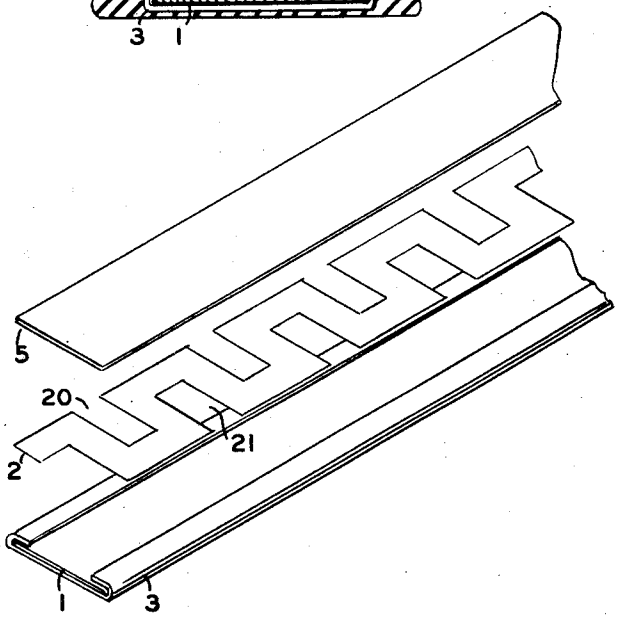

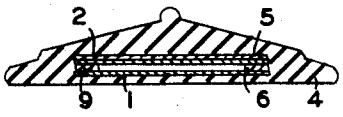

FIG 3

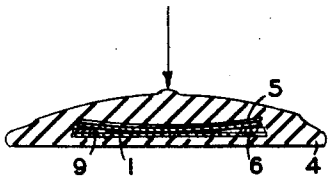

FIG 4

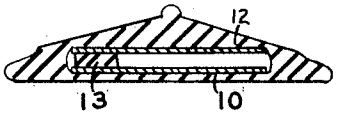

FIG 6

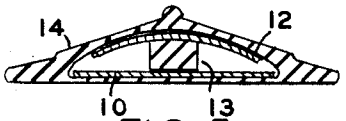

FIG 5

INVENTOR.

BY **ROBERT H. KOENIG**

United States Patent Office 2,896,042 Patented July 21, 1959

2,896,042

TAPE SWITCH

Robert H. Koenig, Cambria Heights, N.Y., assignor to Tapeswitch Corporation of America, Cambria Heights, N.Y.

Application March 3, 1958, Serial No. 718,784

1 Claim. (Cl. 200—86)

This invention relates to electrical switches and more particularly to electrical switches having a continuous tape-like form and adapted to be actuated by any light pressure exerted at any point along its length.

Conventional pressure type strip switches generally have a plurality of spaced insulators and this plurality of parts limits the operability and reliability since they are non-homogeneous in nature and therefore operate differently at different points along their length.

Another problem with conventional switches of this type is that it is not feasible to bend them around corners or to coil unused portions into a small radius since this tends to short circuit them.

The present invention comprises an electrical switch having a pair of spaced continuous conducting strips which may have a slight transverse curvature. The two conducting strips are spaced apart by one or two smaller strips of insulating material and the whole assembly is covered with a rubber or plastic jacket. At least one of the strips is made expandable or compressible by forming it in a zig-zag, square wave, or other wavy equivalent pattern. This is necessary so that the strips will not buckle or short circuit when a portion of the tape switch is coiled.

The wavy or zig-zag pattern provides much greater sensitivity than obtainable with solid strips since only one transverse member need be depressed to make contact. A force of six ounces is sufficient to make contact with an embodiment of the present invention.

In operation, the strip is mounted to a surface and anything pressing against it such as a person's shoulder, finger, or foot will flatten the upper conducting member so that it touches the bottom, thereby making the switch contact. One application of this sensitive switch is that of a safety edge on automatic doors and elevators, whereby the power is shut off when the door touches a person.

A primary advantage of the present invention is that it can be easily manufactured at low cost and it can be covered simply by plastic strips sealed at the edges or by conventional cable covering extrusion process.

Accordingly, a principal object of the invention is to provide reliable and improved electrical switch means.

Another object of the present invention is to provide new and improved electrical switch means of the type adapted to be actuated by foot, vehicular, or any other slight pressure.

Another object of the present invention is to provide new and improved electrical switch which has improved sensitivity.

Another object of the present invention is to provide new and improved tape switch which may be coiled into small radii or bent without buckling or short circuiting it.

Another object of the present invention is to provide a new and improved tape switch which has a continuous expandable and compressible conductor strip.

Another object of the present invention is to provide a new and improved tape switch which has one continuous conductor having a cut out, square wave or zig-zag pattern.

Another object of the present invention is to provide a new and improved tape switch which has fewer parts and which is adaptable for automatic manufacture.

These and other objects of the invention will become apparent from the following specification and drawings, of which:

Figure 1 is a cross sectional view of an embodiment of the invention.

Figure 2 is an exploded view with the outer cover removed.

Figure 3 is a cross sectional view of another embodiment of the invention.

Figure 4 is a cross sectional view of the embodiment of Figure 3 in contacting position, and

Figures 5 and 6 are cross sectional views of other embodiments of the invention.

Switches of the present type may be used for burglar alarm systems, for controlling automatically operated doors, for timing, detecting or counting vehicles, and other similar purposes.

Referring to Figures 1 and 2, the invention comprises a first continuous conductive strip **1** which may be of copper clad steel and a second continuous conductive strip **2** for instance of beryllium which is made expandable or compressible by being cut out at the areas **20, 21**, and so forth so that the strip **2** takes a configuration which may be called a zig-zag or square wave. It is not absolutely necessary that the particular shape shown be used. For instance, the transverse portions could be at different angles. The important thing is that cut-outs are preferably periodic. Alternatively, the strip **2** could be formed by bending a wire in an equivalent shape, flattening the wire if desired. The two strips are insulated from each other by an insulator **3** under the strip **1** and overlapping the strip **1**, so that the strip **2** is insulated therefrom along the edges of strip **1**, there being an air gap between the strips equal to the thickness of the insulating material **3** which, for instance, may be of Mylar or equivalent. If desired, another strip **5** of insulation may be laid on top of the strip **2**, and the entire assembly then encased in a waterproof outer covering **4** of rubber or plastic as shown in Figure 1. This outer covering may be extruded onto the inner assembly in conventional manner. A bead **8** may be added to the outer covering for strengthening and added displacement purposes. The strips may be flat or have a slight transverse curvature.

The purpose of making the strip **2** expandable or compressible is to prevent the tape switch from buckling or short circuiting when a portion of the tape switch is coiled. Another advantage of the zig-zag or equivalent configuration of the strip **2** is that it provides much greater sensitivity than solid tape switches since only one transverse member need be depressed in order to establish contact between the strips **1** and **2**. This switch may also be made with the bottom strip cut out instead of the top, but without advantage of sensitivity improvement. Likewise, both could be cut out.

Figure 3 shows another embodiment of the invention wherein the bottom insulating member **3** has been replaced by two separate strips **6** and **9**.

Figure 4 shows a cross sectional view of the switch in contacting position caused by the weight indicated by the arrow. The bead **8** has a tendency to increase the sensitivity as it increases pressure in the middle of the contacts. The bead **8** also provides greater wear for the tape switch since it is at the point of greatest wear.

Figure 5 shows another embodiment of the invention having a lower conductor **10** and an upper conductor **12**, at least one having a pronounced transverse curvature

and at least one being cut into a cut-out pattern similar to the strip 2, Figure 2. The strips 10 and 12 are separated by a relatively thick insulating membrane 13 which may be of rubber, and the entire is covered with an outer covering 14. The embodiment of Figure 5 would operate in the same manner as the embodiment of Figure 1 except that contact would be made on the side edges of the conducting strips rather than in the center.

Figure 6 shows another embodiment of the invention in which an insulator strip 13' is placed between strips 10' and 12' and to one side of center. Operation would be the same as in the embodiment of Figure 1 except that contact would be made along one edge instead of the center.

I claim:

An electrical tape switch comprising a pair of thin continuous conductive strips, first insulating means between said strips, said insulating means being partially wrapped around one of said strips to provide an air gap between said conductive strips, at least one of said conductive strips being expandable and compressible to permit coiling said tape switch without buckling or short circuiting, at least one of said strips having a transverse curvature and second insulating means placed on the outside of said other strip of said pair and connected to said first insulating means along the edges thereof.

References Cited in the file of this patent

UNITED STATES PATENTS

1,292,030	Parissi	Jan. 21, 1919
2,796,484	Wolf	June 18, 1957
2,796,488	Cooper	June 18, 1957