Oct. 2, 1928. 1,686,118

D. W. BARRIE

VENTILATION ELEMENT FOR WALL CONSTRUCTION AND THE LIKE

Filed June 24, 1926

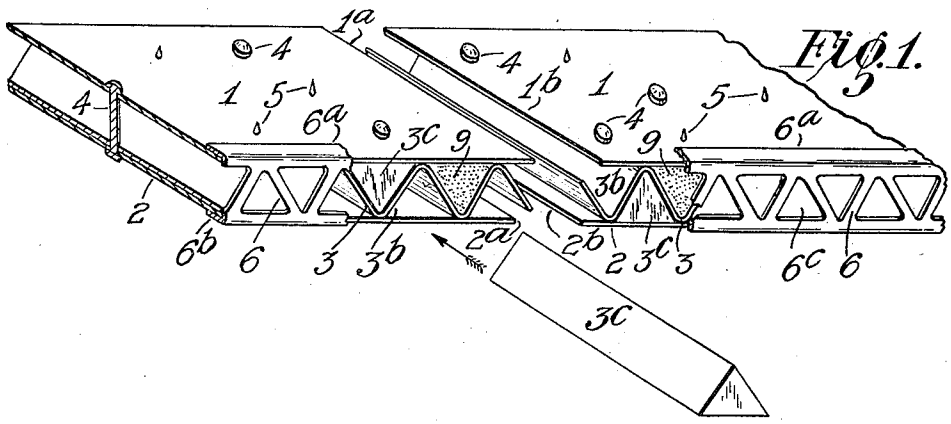

Fig. 1.

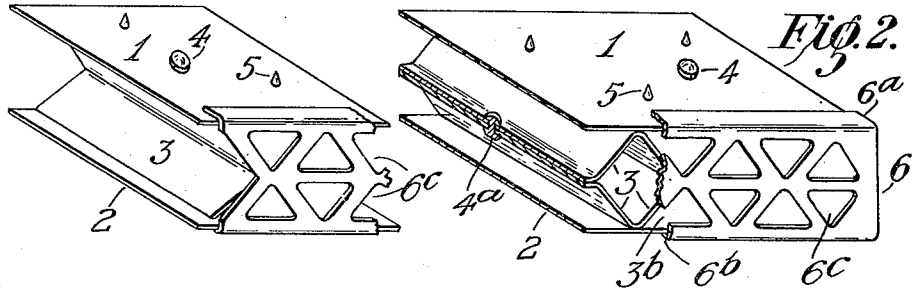

Fig. 2.

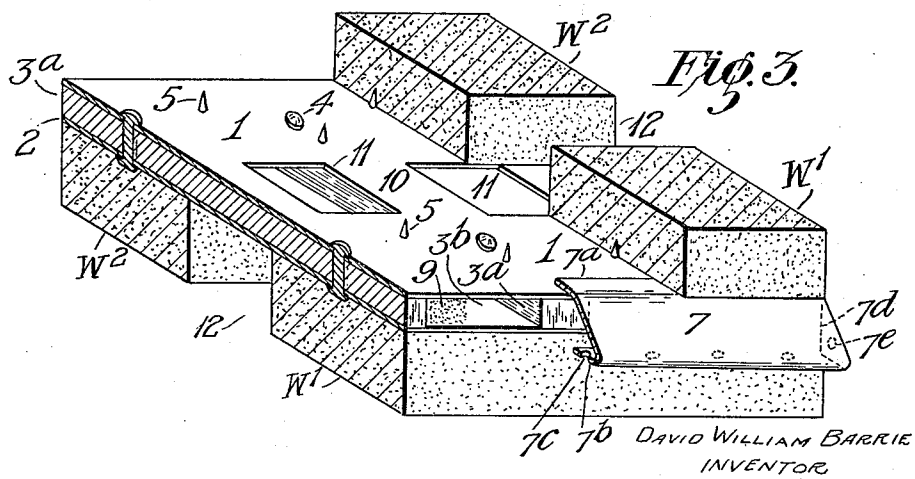

Fig. 3.

DAVID WILLIAM BARRIE
INVENTOR
By Otto Munn
His ATTY.

Patented Oct. 2, 1928. 1,686,118

UNITED STATES PATENT OFFICE.

DAVID WILLIAM BARRIE, OF AUBURN, AUSTRALIA.

VENTILATION ELEMENT FOR WALL CONSTRUCTION AND THE LIKE.

Application filed June 24, 1926, Serial No. 118,186, and in Australia August 19, 1925.

These improvements relate to ventilation elements for walls and like structures, especially of brick or concrete, to provide for ventilation through the walls, prevent moisture passing up the walls, and to sustain the weight of tall walls when required. My elements will form a damp course, to allow of which an existing defective damp course, or a mortar joint or like suitable part of a wall can be removed.

Another object of the invention is to enable the elements to suit walls which have a vertical air cavity between an outer and an inner shell.

A further feature of my preferred element is an apertured front plate or cover extending obliquely or vertically downward as a weather guard.

Each element is of strong non-corrodible material, such as rustless metal members with, in some cases, bitumen filling some of the spaces between the said members.

The dimensions, shape, and minor details of the element will be varied to suit the structure in which it is to be used.

The drawings herewith will, with the following description, enable this invention to be fully understood. Minor details are variable at will from what is illustrated while retaining matter hereinafter claimed.

Figure 1 is a perspective view showing two elements spaced apart, parts of each front plate being broken out. In this figure only one reinforcing bar is shown inserted in each element, and bitumen is shown in only one of the air spaces of each element, but in practice the number will not be limited to one in each case. A reinforcing bar is also shown ready for insertion as indicated by an arrow.

Figure 2 is a perspective view of a relatively high element, the height being due to the arrangement of the interior parts between the top and base plates of the element. The middle part of this figure is broken away to show the interior.

Figure 3 is a partly sectional perspective view of a double wall, with one of my ventilation elements between courses of the wall shells.

The invention can be applied to a new wall while it is being built.

If a wall up which damp rises is to be treated to prevent such rise I select a horizontal joint usually near the building base, and I remove the mortar or cement thereof—a few feet at a time, for example, to avoid any sinking of super-structure. Then my elements will be introduced—with grouting if desired—to fill the gap thus made, and will act as spacing members, and as the gap is extended more elements will be inserted. Parts of my elements will be below whatever vertical joint of the bricks or blocks extend upward from the elements, see Figure 3.

I form each element of upper plating 1, lower plating 2, and intermediate weight supporting means. Plates 1 and 2 are united to one another, rivets 4 being suitable. The said means is for brevity called herein a riser, and one is shown in Figures 1 and 2 formed by a corrugated metal sheet or sheets 3. In Figure 3, bars 3^a constitute the riser.

The corrugated risers extend from front to back and from end to end of the element, and leave air spaces 3^b, of which some will be left open for ventilation, from front to back of the element, but other spaces will be filled when desired with damp-proof material such as bitumen, or will when desired be occupied by reinforcing bars 3^c, which may be of rustless metal. Rivets 4^a, in Figure 2 connect an upper and a lower riser member.

In Figure 1 the end 1^a of plate 1, projects beyond the end 2^a of plate 2, and the end 2^b of plate 2 of the adjacent element projects beyond the end 1^b of the plate 1 of the latter element; that is plate ends overlap or break joint vertically when elements are butted together or nearly so. The riser ends overlap adjacent shorter ends 2^a and 1^b of elements, and no damp will rise between the elements because the ends of the adjacent risers will overlap, or will meet or nearly meet, and break joint vertically.

Outer surfaces of the element are shown with means to facilitate locking the element in a wall. Thus 5 are projections of any suitable length to be embedded in grouting, concrete, or other wall material. When not required these projections are flattened, cut off, or omitted.

For each element front I provide an apertured plate shown vertical at 6, and oblique at 7, each plate having one or more lips by which to grip the element, and has any suitable ventilation apertures. Plate 6 is shown with an upper lip 6^a and a lower lip 6^b, and holes 6^c. The oblique plate 7 slopes outwardly and downwardly, and grips or is fixed on the element by means of a lip 7^a, and in the preferred

form a lower extension 7^b, which extends back towards the wall, and has any suitable ventilation and liquid escape apertures 7^c.

Plate 7 could be integral with plate 1; it is shown with ends 7^d apertured at 7^e. Bitumen or like damp-proof material inserted in spaces between members 1 and 2 is indicated at 9, sufficient spaces 3^b being left open for ventilation. These can to a reasonable extent be utilized for wires, pipes, and other building accessories.

In Figure 3 the middle part of the element forms a wall tie 10, having apertures 11 in the vertical air cavity area of the wall. Thus my element allows air to pass freely vertically in addition to passing transversely through the passages 3^b.

What I claim is:—

1. A metal damp course and ventilating block for arrangement transversely in an upright wall, comprising spaced metal plates, spacing means disposed between the plates and secured thereto to afford air passages from one face to the other of the wall.

2. A metal damp course and ventilating block for arrangement transversely in an upright wall, comprising spaced metal plates, corrugated metal spacing means interposed between and secured to said plates, the spaces formed by the corrugations of the spacing means affording air passages from one face to the other of the wall and between the upper and lower parts of the wall.

3. A ventilation element having an upper and a lower metal plate, a corrugated metal sheet interposed between and fixed to said upper and lower plates to afford air passages from end to end of the element, and reinforcing bars disposed in certain of the corrugations.

4. A metal damp course and ventilating block for arrangement transversely between the upper and lower sections of an upright wall, comprising an upper and a lower metal plate, spacing means interposed between the two plates and fixed thereto to afford air passages between opposite faces of the wall, and projecting means for the said plates disposed to embed themselves in the adjacent surfaces of the upper and lower wall sections.

5. A metal damp course and ventilating block for arrangement transversely in an upright wall, comprising spaced metal plates, spacing means interposed between and secured to said plates to afford air passages between the opposite faces of the wall, and an apertured plate for arrangement over the front of said block.

6. A metal damp course and apertured plate, as claimed in claim 5, in which the apertured plate is provided with flanges to embrace the upper and lower metal plates.

7. A metal damp course composed of a plurality of ventilating units, each thereof comprising spaced plates for arrangement transversely in an upright wall, each upper plate in the direction of the wall being longer at one end and shorter at the other than the corresponding ends of the lower plates, to afford overlapping joints, and spacing means interposed and secured to each pair of upper and lower plates to afford air passages between opposite faces of the wall.

In witness whereof I have hereunto set my hand.

DAVID WILLIAM BARRIE.